CITY OF COTTAGE GROVE

APPENDICES

FOR

SECONDARY CLARIFIER 1 REHABILITATION

JOB NO. 23-1072

Project Administrated by

March 2023

CITY OF COTTAGE GROVE, OREGON

APPENDICES

FOR

SECONDARY CLARIFIER 1 REHABILITATION

APPENDICES

APPENDIX A: Record Drawings - City of Cottage Grove, Sewage Treatment Plant Improvements. Roger L. Sinclair Engineering, January 1983

APPENDIX B: Clear Stream Equipment Submittal

APPENDIX C: Past Geotechnical Reports

- Cottage Grove WWTP Improvements, Geotechnical Investigation, Foundation Engineering, Inc., February 2004
- Cottage Grove WWTP, Storage Pond, Revised Final Geotechnical Data Report, Shannon & Wilson, Inc., November 2019

APPENDIX A

Record Drawings:

City Of Cottage Grove, Sewage Treatment Plant Improvements
Roger L. Sinclair Engineering, January 1983

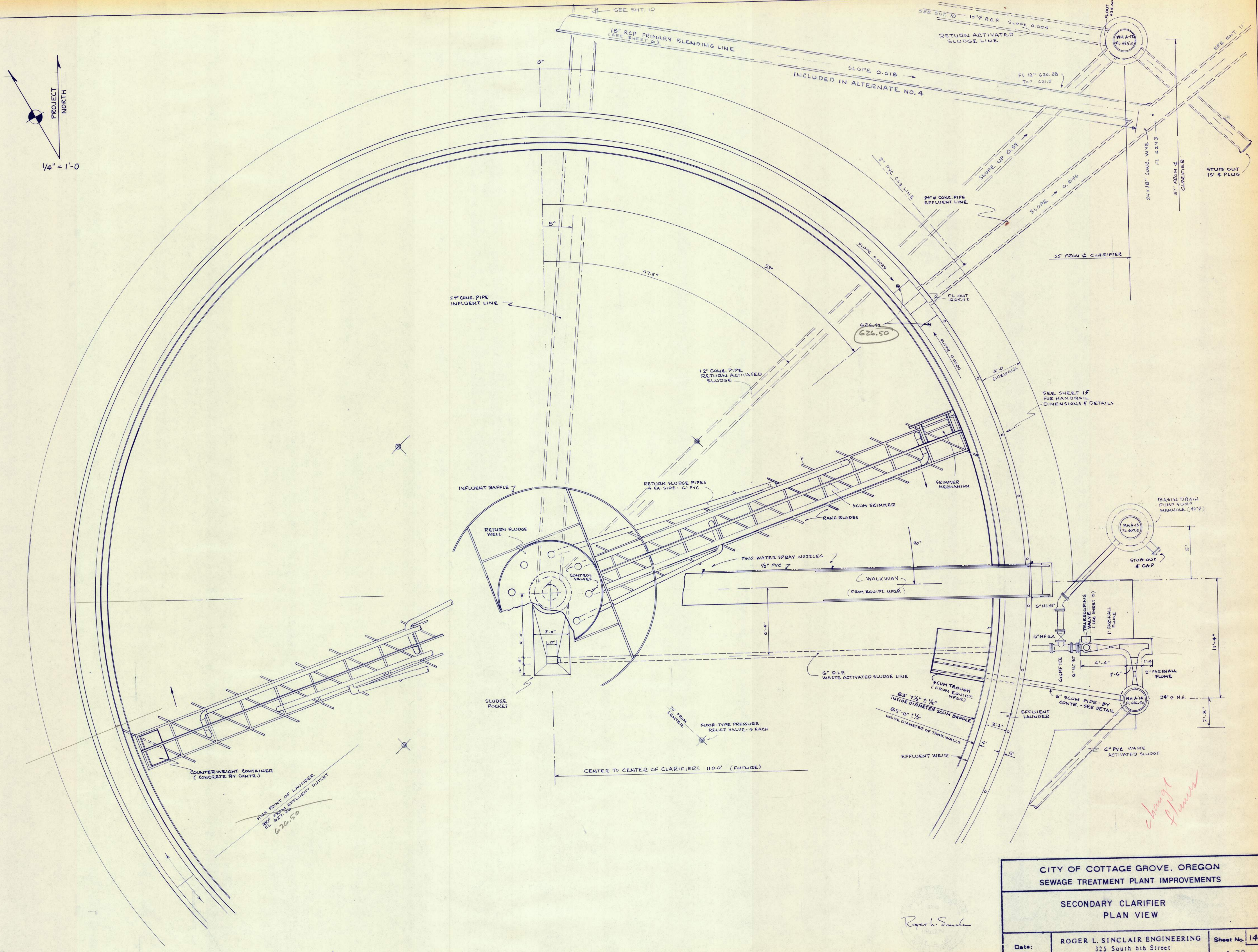

Roger L. Sinclair

CITY OF COTTAGE GROVE, OREGON
SEWAGE TREATMENT PLANT IMPROVEMENTS

SECONDARY CLARIFIER
PLAN VIEW

Date:
JAN. 1983

ROGER L. SINCLAIR ENGINEERING
325 South 6th Street
Cottage Grove, Oregon

Sheet No. 14
of 32

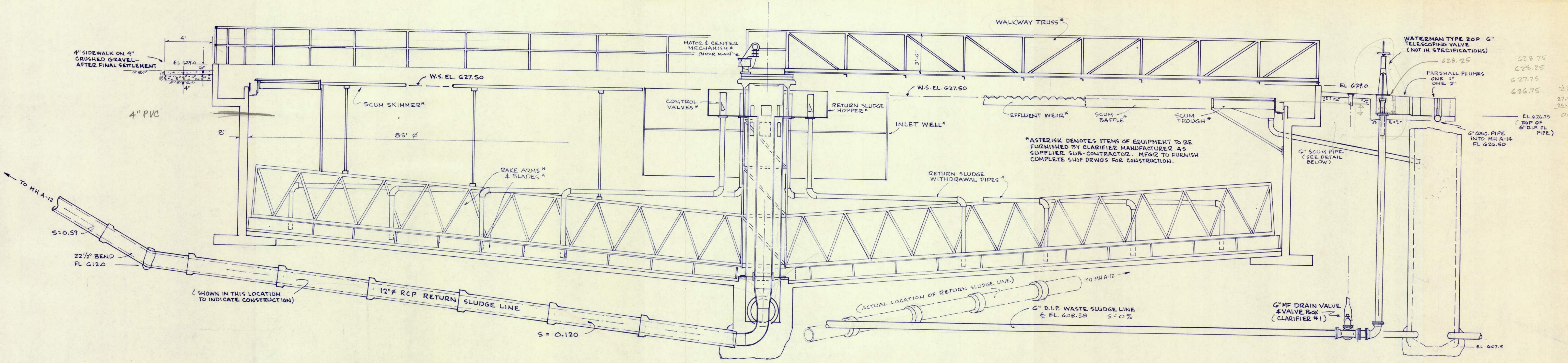

SECONDARY CLARIFIER ELEVATION
SECTION AA 1/4" = 1'

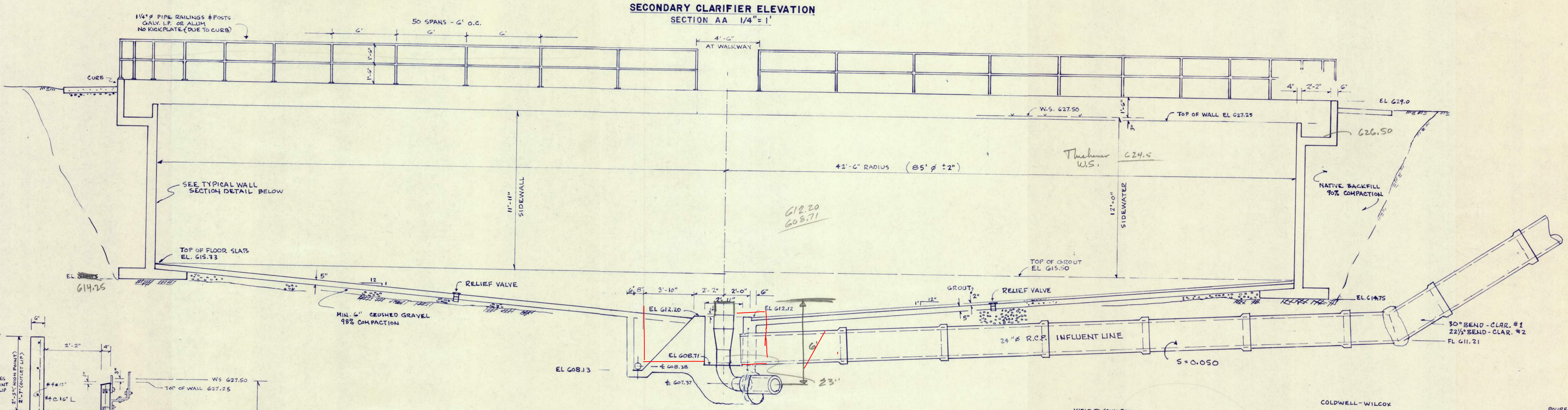

ELEVATION W/O EQUIPMENT
SECTION BB

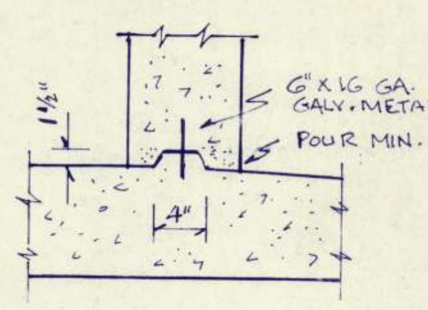

CONSTRUCTION JOINT DETAIL
3/4" = 1'

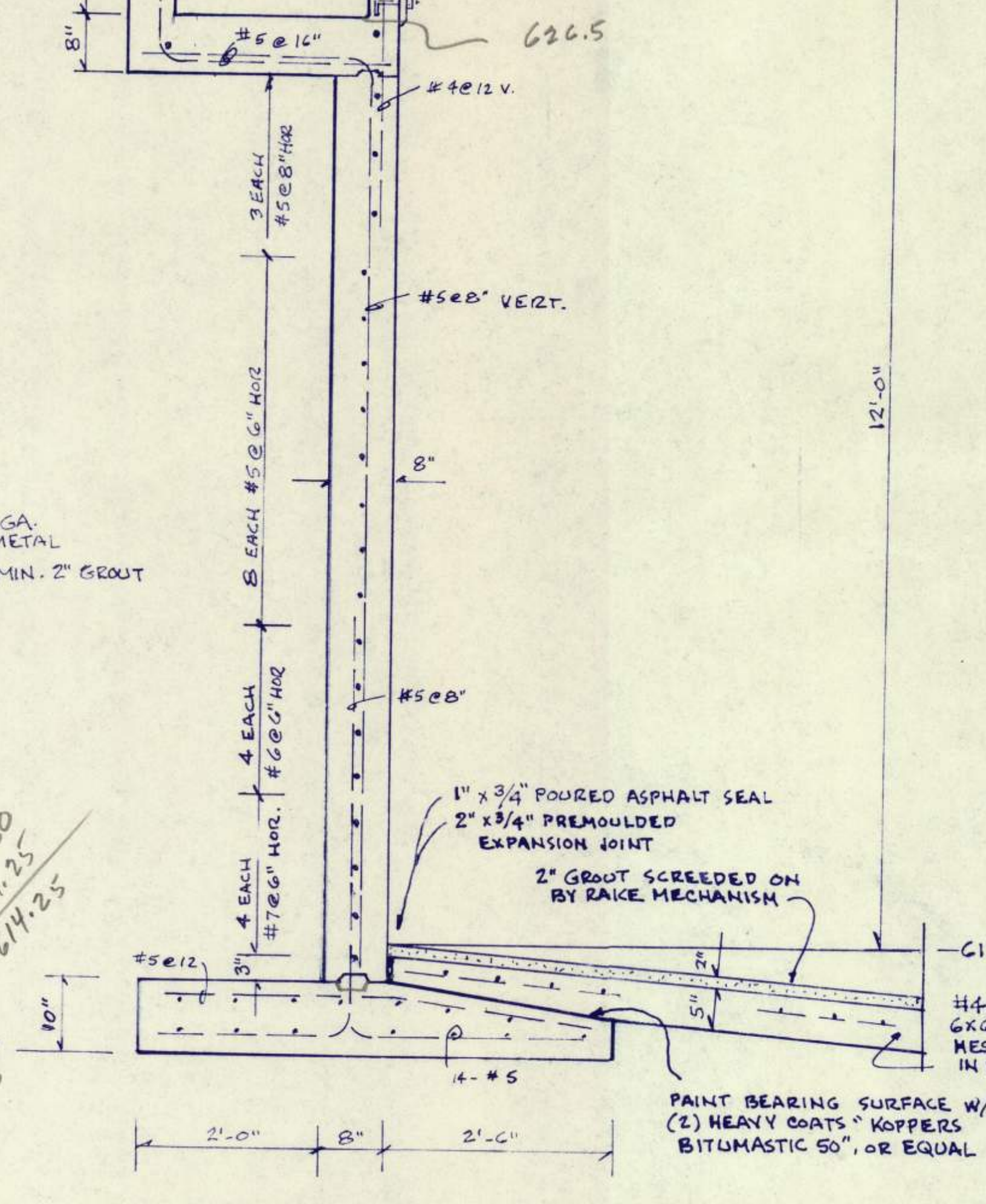

TYPICAL WALL SECTION
1/2" = 1'

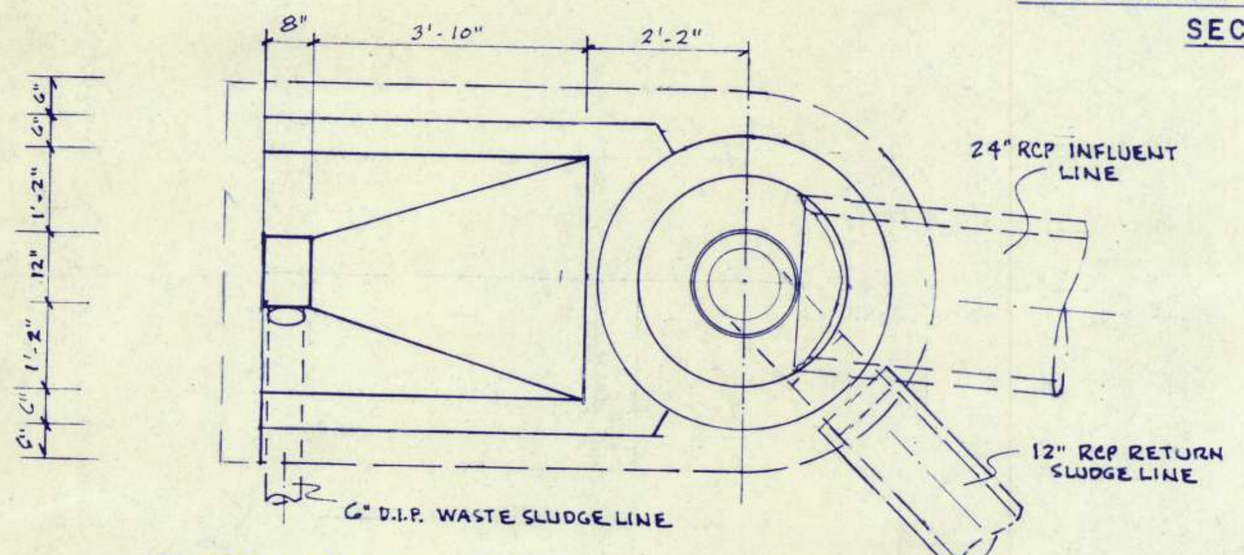

CENTER SECTION PLAN

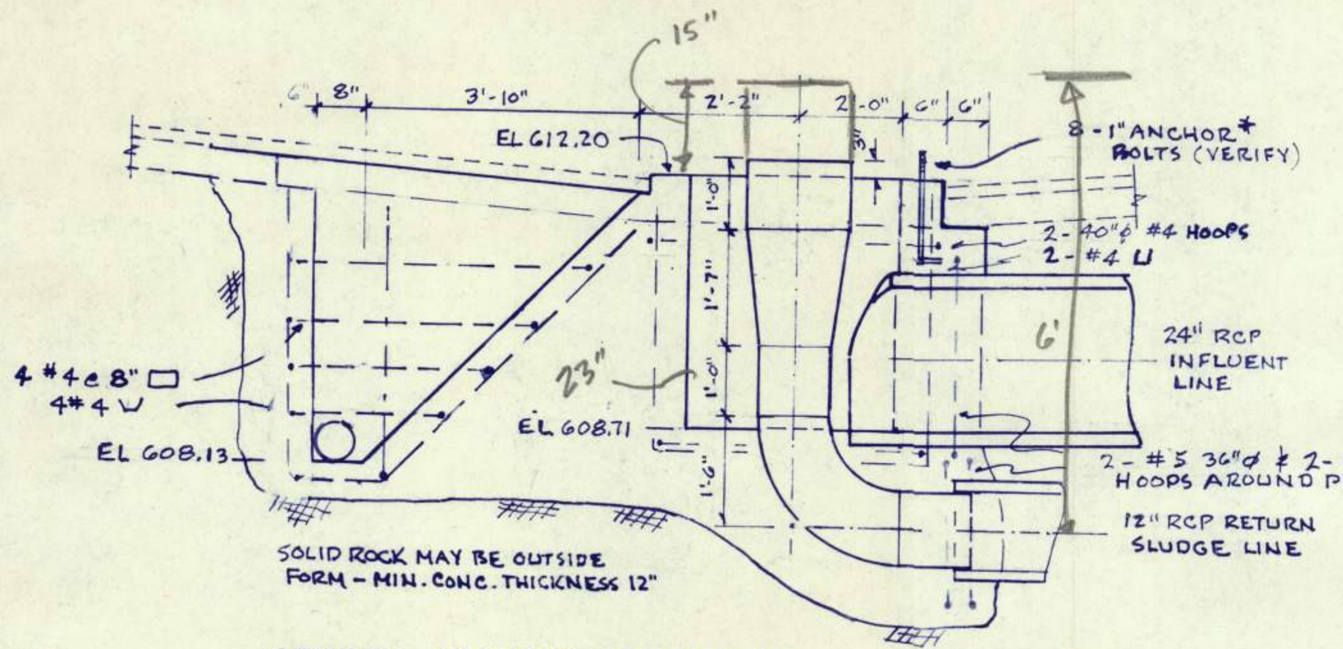

CENTER SECTION ELEVATION
3/8" = 1'

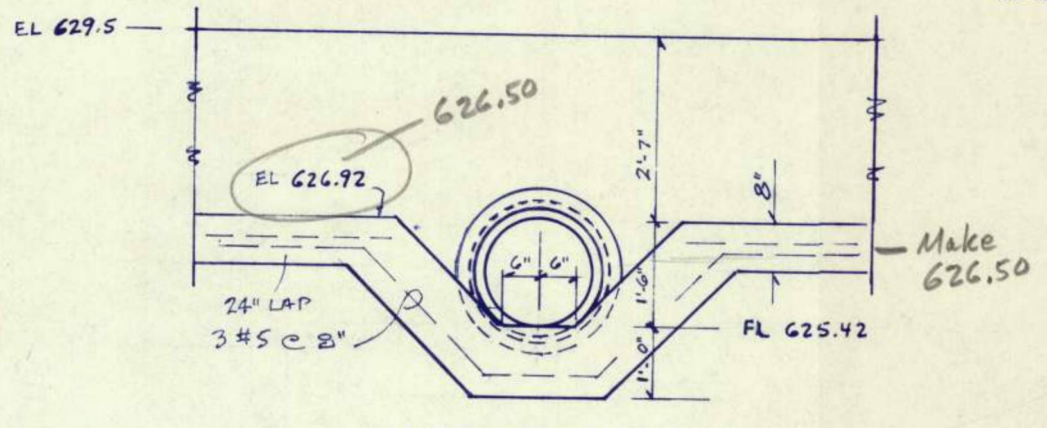

OUTLET DETAIL
SECTION CC

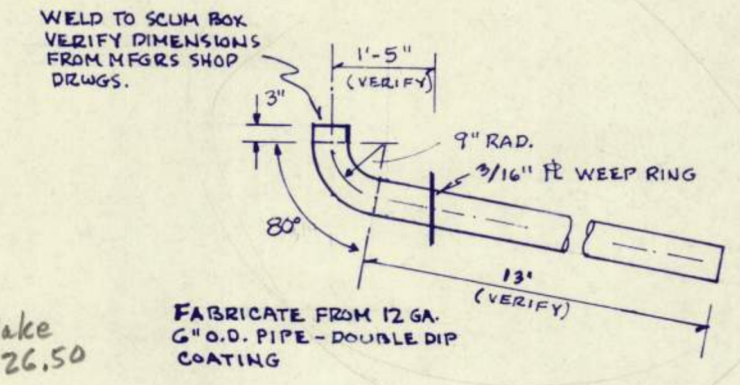

SCUM PIPE DETAIL 3/8" = 1'

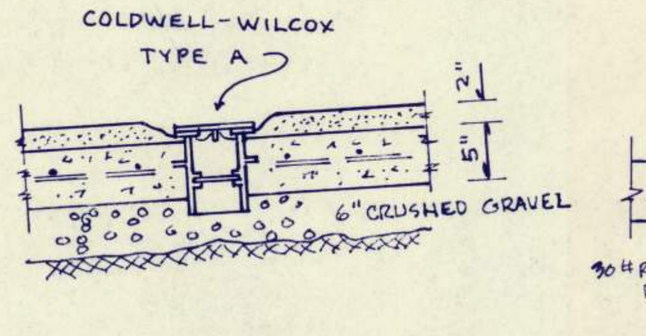

RELIEF VALVE DETAIL
3/8" = 1'

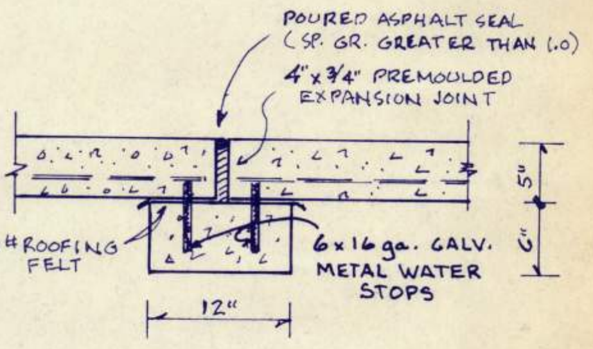

SLAB JOINT DETAIL
3/4" = 1'

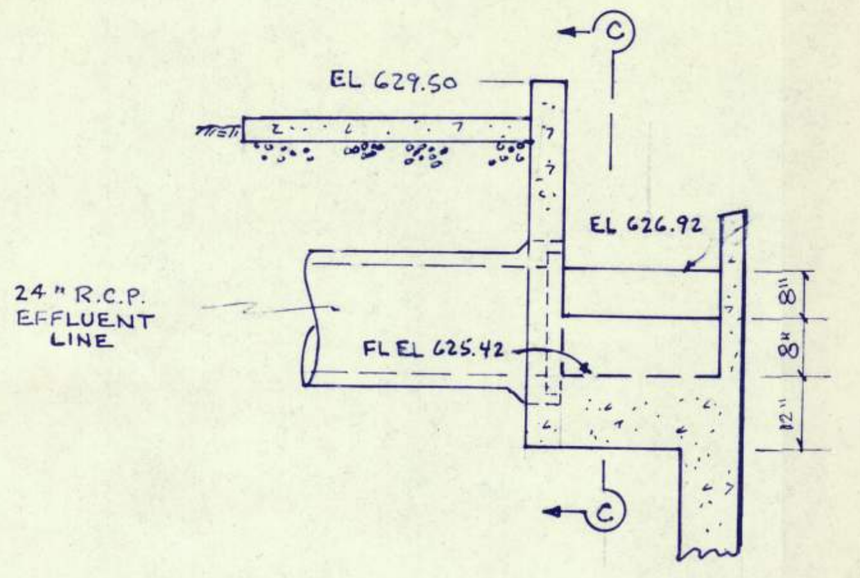

OUTLET DETAIL
3/8" = 1'

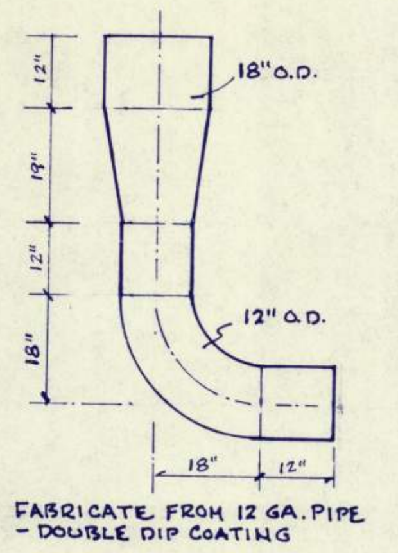

RETURN SLUDGE PIPE BASE FITTING
3/8" = 1'

6243
JULY 19, 1984
ROGER L. SINCLAIR

CITY OF COTTAGE GROVE, OREGON
SEWAGE TREATMENT PLANT IMPROVEMENTS

SECONDARY CLARIFIER ELEVATIONS
AND DETAILS

Date:	ROGER L. SINCLAIR ENGINEERING 325 South 6th Street Cottage Grove, Oregon	Sheet No. 15
JAN. 1983		of 32

APPENDIX B

Clear Stream Equipment Submittal

MECHANISM SUBMITTAL

JOB NAME:

COTTAGE GROVE, OR

EQUIPMENT:

ONE (1) 85'-0" DIAMETER SPIRAL BLADE SECONDARY CLARIFIER

MANUFACTURER:

CLEARSTREAM ENVIRONMENTAL, INC.
(801) 676.1890

CLEARSTREAM REPRESENTATIVE:

JBI WATER & WASTEWATER
JIM COSKEY
(541) 609.1367

ClearStream Job Number: 22-008
Revision: A
Date: September, 2022

TABLE OF CONTENTS

SCOPE OF SUPPLY REV A

MECHANICAL DESCRIPTION

One (1) 85’-0” diameter x 8’-7 1/16” side water depth (with 3’-4 13/16” free board) secondary clarifier mechanism designed for installation in a concrete tank. The mechanism shall consist of the following equipment:

- One (1) center column mounted precision bearing cage drive mechanism to drive the rake arms.
  - Rake drive is a low-speed, high torque, totally enclosed gear drive with positive overload protection. The drive consists of a ¾ hp, 3 phase, 480 volt, 60 hertz, motor, mechanical speed reducer, and precision main bearing designed for a continuous torque of 15,000 ft-lbs. The main bearing carries a ten year warranty.
- One (1) Access bridge and center platform. The access walkway shall be 3’-0” wide with aluminum grating and 3 rail aluminum handrail. Walkway will extend from one tank wall to the center column. The center platform shall provide 36” clearance around the drive unit. The platform will be covered with ¼” aluminum checker plate.
- One (1) structural 304 stainless steel influent/support column, 30” diameter x minimum of ¼” wall thickness w/interior RAS transition pipe center column to the manifold.
- One (1) structural 304 stainless steel drive cage
- Two (2) full radius 304 stainless steel rake arm trusses with spiral blades tapering from 9” on the outside to 42” deep near the center complete with stainless steel squeegees.
- One (1) sludge manifold 9’-0” diameter x 3’-6” deep with neoprene seals, and plated with ¼” steel shall be supported from the drive cage.
- One (1) 8’-6” diameter x 5’-0” deep type 2 LA EDI. The Type 2 EDI combines the EDI and the feedwell into one unit. This is the EDI recommended by CPE.
- One (1) 304 stainless steel skimmer assembly to include scum deflector blade, and 4’-0” wide hinged skimmer w/neoprene wipers.
- One (1) 4’-0” wide x 1/4” thick 304 stainless steel scum box with wall supports, Fernco coupling, and scum flushing valve.
- One (1) set of 304 stainless steel weirs and baffles. Weirs shall be 9” deep x ¼” thick with V-notches. Baffles shall be 12” deep x ¼” thick, with supports.
- Neoprene anti-rotation baffle

ANCHORS

- 316 stainless steel anchor bolts
- 316 stainless steel fasteners

COATINGS/SURFACE PREP

- Surface preparation and coating

  - Non immersion service
    - SSPC-SP6 (commercial blast)
    - One (1) prime coat of Tnemec Series N69 Epoxoline (6-8 mils)
    - One (1) final coat of Tnemec Series 73 Endura Sheild (2-6 mils)
  - Immersion service
    - None (304 stainless steel)

FIELD SERVICE:

- Field service shall consist of two (2) trips for a total of up to four (4) days for mechanism checkout, torque test and operation instruction.

ClearStream
ENVIRONMENTAL

RESPONSE TO COMMENTS LETTER

This letter is a response to comments from West Yost received dated Monday June 28, 2022.

The Engineer and City take no exceptions to CSE's comments on the specification starting on page 352 of 416 except as noted below.

1. **ENGINEER COMMENT**: See attached survey results for elevations. Correct elevations. Correct elevations shown submittal drawings including on drawing 101. **CLEARSTREAM RESPONSE** Elevations are updated.
2. **ENGINEER COMMENT**: Correct "primary clarifier" to "secondary clarifier" throughout. **CLEARSTREAM RESPONSE** Corrected.
3. **ENGINEER COMMENT:** Provide sludge manifold diameter size. **CLEARSTREAM RESPONSE** Size now provided on drawings.
4. **ENGINEER COMMENT:** CSE does not need to provide electrical wiring or local control panels as specified in Section 11338.1.01.E and F. This will be provided by the general contractor. **CLEARSTREAM RESPONSE** Noted.
5. **ENGINEER COMMENT:** As indicated in the CSE submittal and per RFI 1 dated May 6, 2022, design torque parameters shall be in accordance with 11338 Section 2.05.C.1 and not 11338 2.05.N.5. **CLEARSTREAM RESPONSE** Noted.
6. **ENGINEER COMMENT:** State the maximum allowable headloss through the clarifier equipment at maximum inlet flow per spec section 11338.1.05.A.1. **CLEARSTREAM RESPONSE** Now provided. See calculations section.
7. **ENGINEER COMMENT:** CSE states the SVI (mL/g) is 110 and ranges from 100 to 120. Per spec section 11338.1.05.B, the SVI shall be 200 mL/g. Please revise. Also, increase the RAS recycle flow to 2 mgd per 11338.105.B. **CLEARSTREAM RESPONSE** Now revised. See calculations section.
8. **ENGINEER COMMENT:** Per Addendum No. 2, rotational speed shall be between 12 feet per minute arm tip speed. **CLEARSTREAM RESPONSE** Drive unit rpm is 0.044, which calculates to 11.75 ft/min tip speed. CSE feels this meets intent and is closest to 12 ft/min without going over tip speed.
9. **ENGINEER COMMENT:** Provide O&M manuals after submittal approval along with the Extended Warranty form. Complete manufacturer's installation certification form after installation. Provide Manufacturer's representative report after start up. **CLEARSTREAM RESPONSE** Noted.
10. **ENGINEER COMMENT:** Provide 5 year warranty instead of one year warranty per specification Section 11338.1.11.A.1. **CLEARSTREAM RESPONSE** Will be provided in O&M.

11. **ENGINEER COMMENT:** Confirm the owner is provided license for the LA-EDI. **CLEARSTREAM RESPONSE** CSE has paid CPE for use of the LA-EDI design for this project.
12. **ENGINEER COMMENT:** Provide detail of Type 2 LA-EDI. **CLEARSTREAM RESPONSE** CSE has provided in submittal what was provided to CSE from CPE.
13. **ENGINEER COMMENT:** Per spec section 11338.2.03.E.2.B, the material of the drive cage shall be type 304 rolled stainless steel. The proposed drive change is predominately carbon steel per PRE brochure. Drawing 100 states stainless steel drive cage. Resolve inconsistency. **CLEARSTREAM RESPONSE** No inconsistency. The drive unit components will be coated steel. The cage will be 304 ss.
14. **ENGINEER COMMENT:** Confirm wear block is polyvinyl chloride. **CLEARSTREAM RESPONSE** Confirmed.
15. **ENGINEER COMMENT:** Per spec section 11338.2.03.F.3.D, provide an 8 inch diameter scum pipe. A fernco coupling is acceptable. The existing 6 inch scum pipe will be replaced with a new 8 inch scum pipe. The design will match CSE's elevation. **CLEARSTREAM RESPONSE** 8" pipe and fernco will be provided.
16. **ENGINEER COMMENT:** A launder cleaning brush system will not be required. However, a 2" inch plant water pipe for spray water and utility water spray down will need to be supported from the bridge. The weight of the pipe will be approximately six pounds per foot. **CLEARSTREAM RESPONSE** Noted. Acceptable.
17. **ENGINEER COMMENT:** Confirm force between the baffle and wear block is adjustable between 1 and 5 pounds. **CLEARSTREAM RESPONSE** Confirmed.
18. **ENGINEER COMMENT:** Grease lubricated bearings are acceptable for the main bearing and oil lubricated bearing for the helical and planetary bearings are acceptable. City shall provide type of synthetic oil to use. **CLEARSTREAM RESPONSE** Noted.
19. **ENGINEER COMMENT:** City shall confirm width of scum trough. **CLEARSTREAM RESPONSE** Noted.
20. **ENGINEER COMMENT:** Provide structural calculations by a licensed professional engineer in the State of Oregon for the handrailing. **CLEARSTREAM RESPONSE** Calculations will be provided in a separate submittal so as to not slow down approval and fabrication of mechanism. Calculations will be sent for approval be for shipment of handrail.
21. **ENGINEER COMMENT:** A picture sample is sufficient for the handrail surface color. **CLEARSTREAM RESPONSE** Noted Will provide with handrail calculations.
22. **ENGINEER COMMENT:** Confirm top rails of guards can withstand 100 pound load applied vertically downward. **CLEARSTREAM RESPONSE** Will be sent with calculations.
23. **ENGINEER COMMENT:** Peak to Peak Engineered railing is acceptable as the manufactures for handrailing. **CLEARSTREAM RESPONSE** Noted.
24. **ENGINEER COMMENT:** Provide shop drawings of grating that show specification requirements are being met. **CLEARSTREAM RESPONSE** Information is provided under the grating section of submittal .

25. **ENGINEER COMMENT:** Grating will be supported by the walkway structure as shown in calculations. **CLEARSTREAM RESPONSE** Noted.
26. **ENGINEER COMMENT:** Provide calculations showing grating with 1 ¼" inch depth meets specifications. **CLEARSTREAM RESPONSE** Provided in grating section of submittal.
27. **ENGINEER COMMENT:** Provide structural calculations for loads on center column anchor bolts. Check column for AISC load combination limits. See Section B-B on drawing 102. **CLEARSTREAM RESPONSE** Anchor bolt calculations provided.
28. **ENGINEER COMMENT:** Provide structural calculations for another bolts to prove size embedment is adequate for supports. See section A-A on drawing 104. **CLEARSTREAM RESPONSE** Anchor bolt calculations provided.
29. **ENGINEER COMMENT:** Check anchor bolt size and embedment to make sure these anchor bolts can resist the forces as stated on anchor data sheet. **CLEARSTREAM RESPONSE** CSE unclear on comment.
30. **ENGINEER COMMENT;** Check for compliance with AISC allowable load limits for column sizing. **CLEARSTREAM RESPONSE** Confirmed.
31. **ENGINEER COMMENT:** Existing tank wall is unable to support fully restrained supports. Use pinned connections and check stresses and deflections. **CLEARSTREAM RESPONSE** CSE coordinated with engineer to provide a longer bridge and a new support pad for walkway will be added by contractor .
32. **ENGINEER COMMENT:** Per spec section 11338.2.03B.4A bottom support flange thickness shall be a minimum of 1/4" inch thick. CSE proposed a 1" baseplate thickness as long as it meets loading criteria. Please confirm that it meets loading criteria. **CLEARSTREAM RESPONSE** Confirmed.
33. **ENGINEER COMMENT:** Per spec section 11338.2.03B.4C and 5C the bottom and top support flange shall be welded to center column with full penetration welds. CSE proposed ¼" fillet seal welds as long as it meets loading criteria. CSE will verify this before fabrication.
    a. RISA model indicates fully restrained supports are required. Either provide full penetration welds or revise RISA model. **CLEARSTREAM RESPONSE** Confirmed.
34. **ENGINEER COMMENT:** Per spec section 11338.2.03.F.3.A space supports are not to be greater than 10 feet apart. CSE design allows up to 12 feet spacing based on past installations.
    a. Provide buoyancy calculations on trough for 12 foot support spacing to prove weirs will operate properly. **CLEARSTREAM RESPONSE** I think there is confusion on what is being stated in this spec. section. Clearstream will meet the spec. No calculations will be provided. Weirs and baffles are supported on 24" spacing.
35. **ENGINEER COMMENT:** Provide 316 stainless steel enclosure for torque box assembly. **CLEARSTREAM RESPONSE** Confirmed with city and engineer that 304 ss will be acceptable.

36. **ENGINEER COMMENT:** Is the optional pressure transducer being furnished? **CLEARSTREAM RESPONSE** The optional pressure switch set for 140% of continuous is being provided. See PRE drive unit GA drawings in the submittal.
37. **ENGINEER COMMENT:** Provide a two year warranty on all drive components per specification 11060 1.07.A. **CLEARSTREAM RESPONSE** Confirmed.

GENERAL ARRANGEMENT DRAWINGS

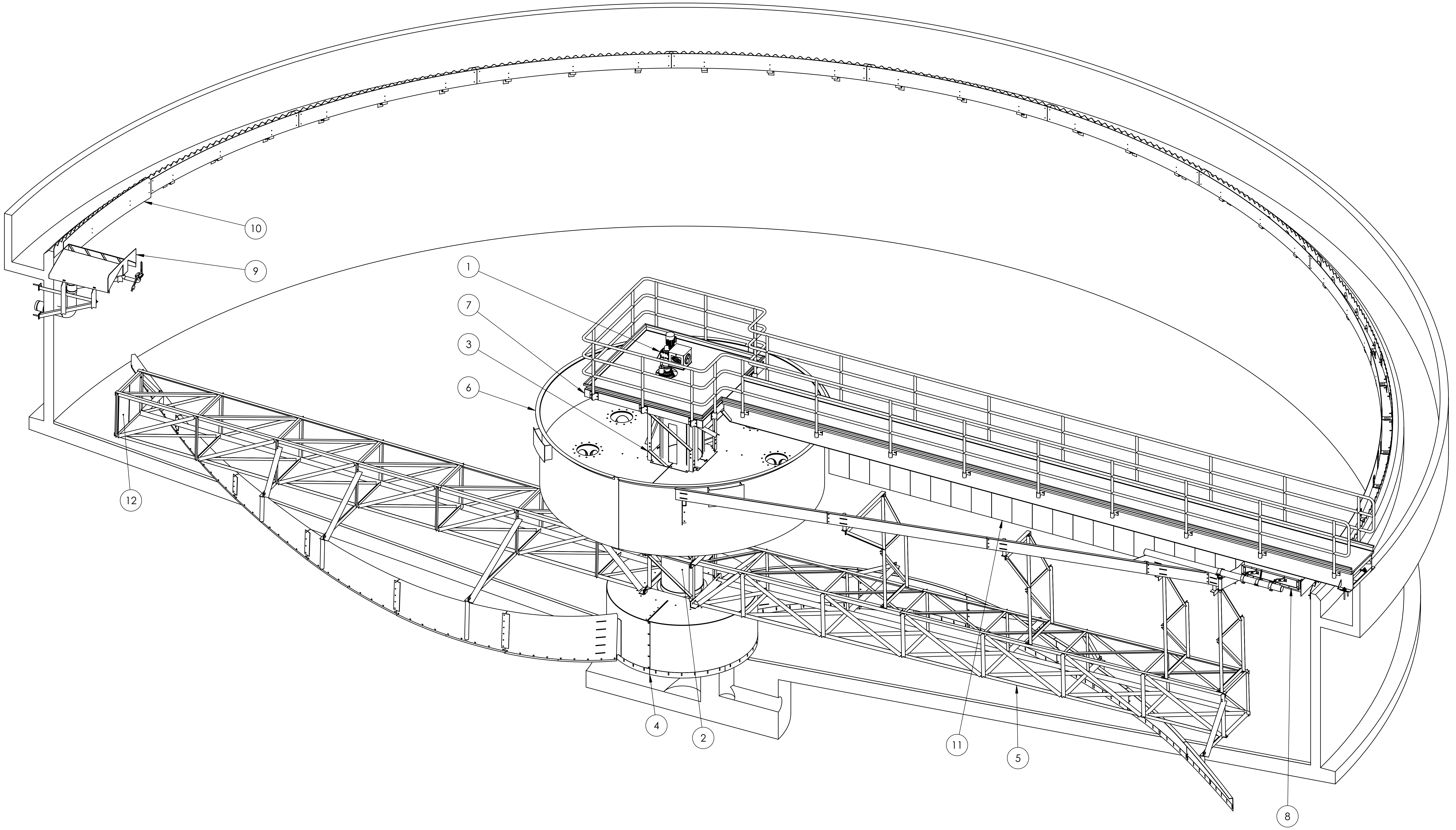

CLARIFIER

DIAMETER: 85'-0"
SIDE WATER DEPTH: 12'-3$\frac{1}{4}$"△A
SIDE WALL DEPTH: 13'-8$\frac{7}{8}$"△A

1. CENTER DRIVE MECHANISM W/ OVERLOAD DEVICES ALARMS AND CONTROLS

2. SUPPORT COLUMN
   DIAMETER: ∅30"
   MATERIAL: 304SS
   WEIGHT: 1700 LBS

3. DRIVE CAGE
   MATERIAL: 304SS
   WEIGHT: 800 LBS

4. MANIFOLD
   MATERIAL: 304SS
   WEIGHT: 2200 LBS
   MANIFOLD ∅: 9'-1"△A

5. RAKE ARM WITH ADJUSTABLE SQUEEGEES
   SPIRAL BLADE: 9" TO 40"△A
   MATERIAL: 304SS
   WEIGHT: 3300 LBS

6. LA-EDI II
   DIAMETER: ∅17'△A
   DEPTH: 5'-0"
   MATERIAL: 304SS
   WEIGHT: 3900 LBS

7. ACCESS WALKWAY
   MATERIAL: CARBON STEEL
   WEIGHT: 3600 LBS

8. SKIMMER
   MATERIAL: 304 SS
   LENGTH:4'-0"

9. SCUM BOX
   LENGTH: 4'-0"
   MATERIAL: 304SS
   WEIGHT: 700 LBS

10. 304 SS WEIRS & BAFFLES

11. ANTI-ROTATION BAFFLES

12. COUNTER WEIGHT

A	UPDATED ELEVATIONS. CORRECTED ERRORS.	JSM	TSH	7-22
0	INITIAL RELEASE	JM	TSH	5-22
REV.	DESCRIPTION	DRAWN	APPROV.	DATE

ClearStream ENVIRONMENTAL
9090 SOUTH 300 WEST
SANDY, UT 84070
OFFICE: (801) 676-1890
FAX: (801) 676-1893

UNLESS OTHERWISE SPECIFIED:
DIMENSIONS ARE IN INCHES
WEIGHTS ARE IN LBS
TOLERANCES (I.A.W. AWS D1.1, AISC CODE OF STD PRACTICE):
FRACTIONAL: ±1/8"
HOLE LOCATION: ±1/32"
MATERIAL: N/A
WEIGHT EACH: N/A
NUMBER OF MECHANISMS: 1
TOTAL WEIGHT: N/A

	NAME	DATE
DRAWN	JM	5/22
CHECKED	TSH	5/22
ENG APPR.	TSH	5/22
FAB INSP.		

DO NOT SCALE DRAWING
MODEL NUMBER:
DESIGNATION:

Cottage Grove
TITLE:
GENERAL ARRANGEMENT
SIZE D
DWG. / PART NO. 100
REV A
SCALE: 1:36
SHEET 1 OF 1

D 22-008 REV A

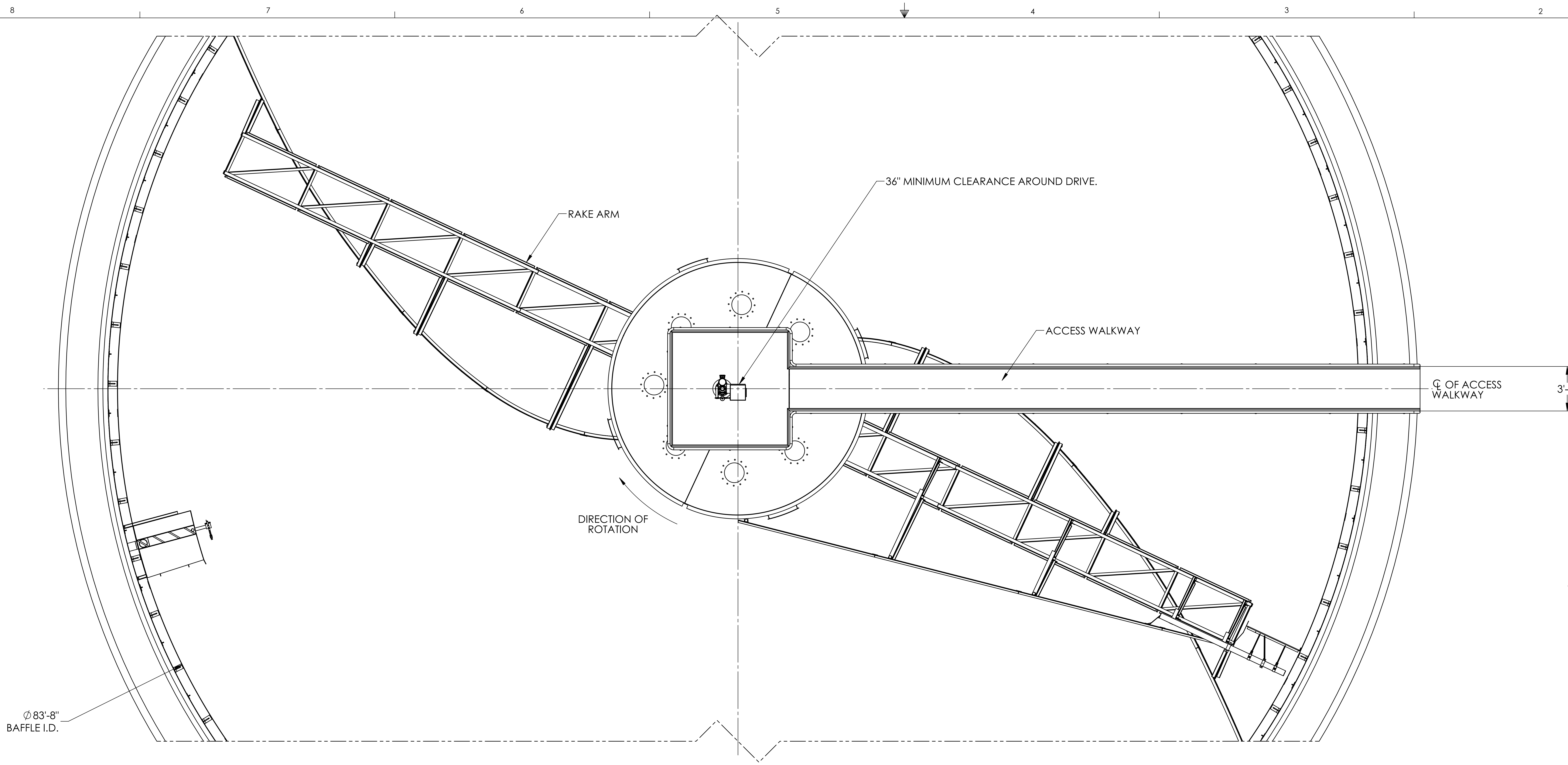

PLAN VIEW

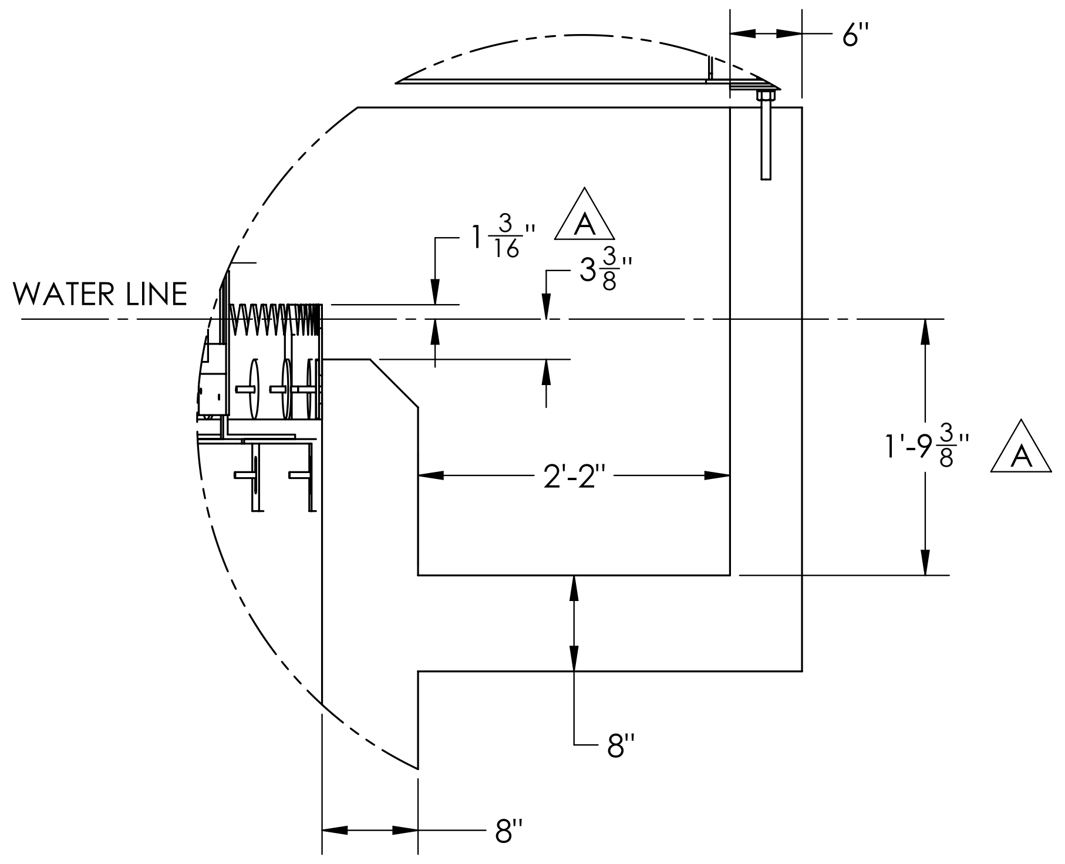

DETAIL A
SCALE 1 : 16

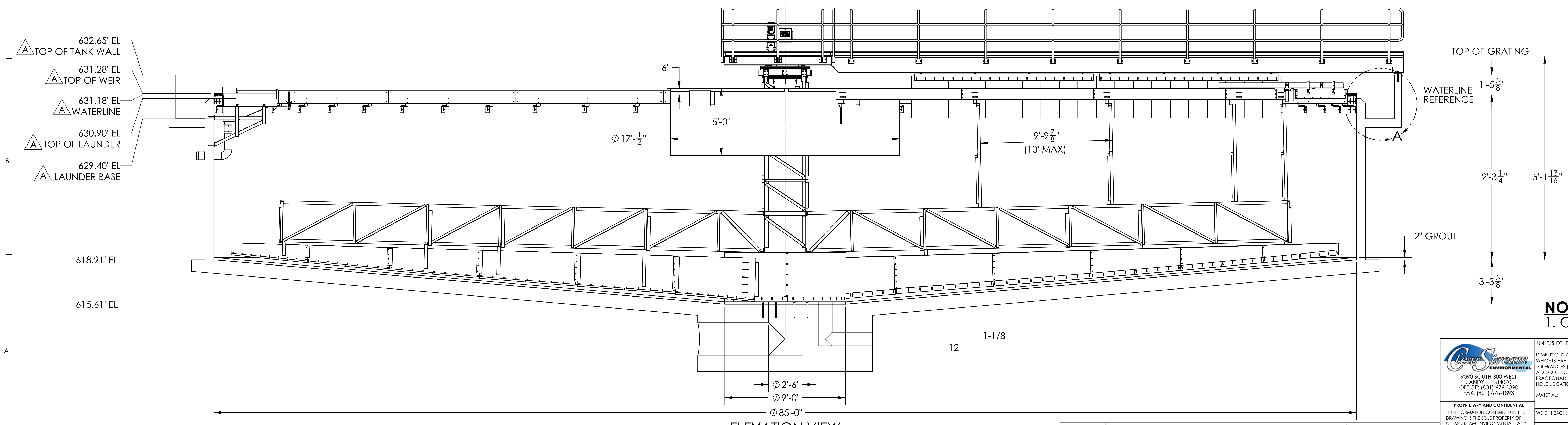

ELEVATION VIEW

NOTES:
1. CUSTOMER TO CONFIRM ALL DIMENSIONS.

REV.	DESCRIPTION	DRAWN	APPROV.	DATE
A	UPDATED ELEVATIONS. CORRECTED ERRORS.	JSM	TSH	7-22
0	INITIAL RELEASE	JSM	TSH	5-22

ClearStream ENVIRONMENTAL
9090 SOUTH 300 WEST
SANDY, UT 84070
OFFICE: (801) 676-1890
FAX: (801) 676-1893

UNLESS OTHERWISE SPECIFIED:
DIMENSIONS ARE IN INCHES
WEIGHTS ARE IN LBS
TOLERANCES (I.A.W. AWS D1.1, AISC CODE OF STD PRACTICE):
FRACTIONAL: ±1/8"
HOLE LOCATION: ±1/32"

MATERIAL: N/A
WEIGHT EACH: N/A
NUMBER OF MECHANISMS: 1
TOTAL WEIGHT: N/A

	NAME	DATE
DRAWN	JM	5/22
CHECKED	TSH	5/22
ENG APPR.	TSH	5/22
FAB INSP.		

DO NOT SCALE DRAWING
MODEL NUMBER:
DESIGNATION:

Cottage Grove

TITLE:
GENERAL ARRANGEMENT CONTINUED

SIZE: D
DWG. / PART NO.: 101
REV: A
SCALE: 1:50
SHEET 1 OF 2

22-008 D REV A

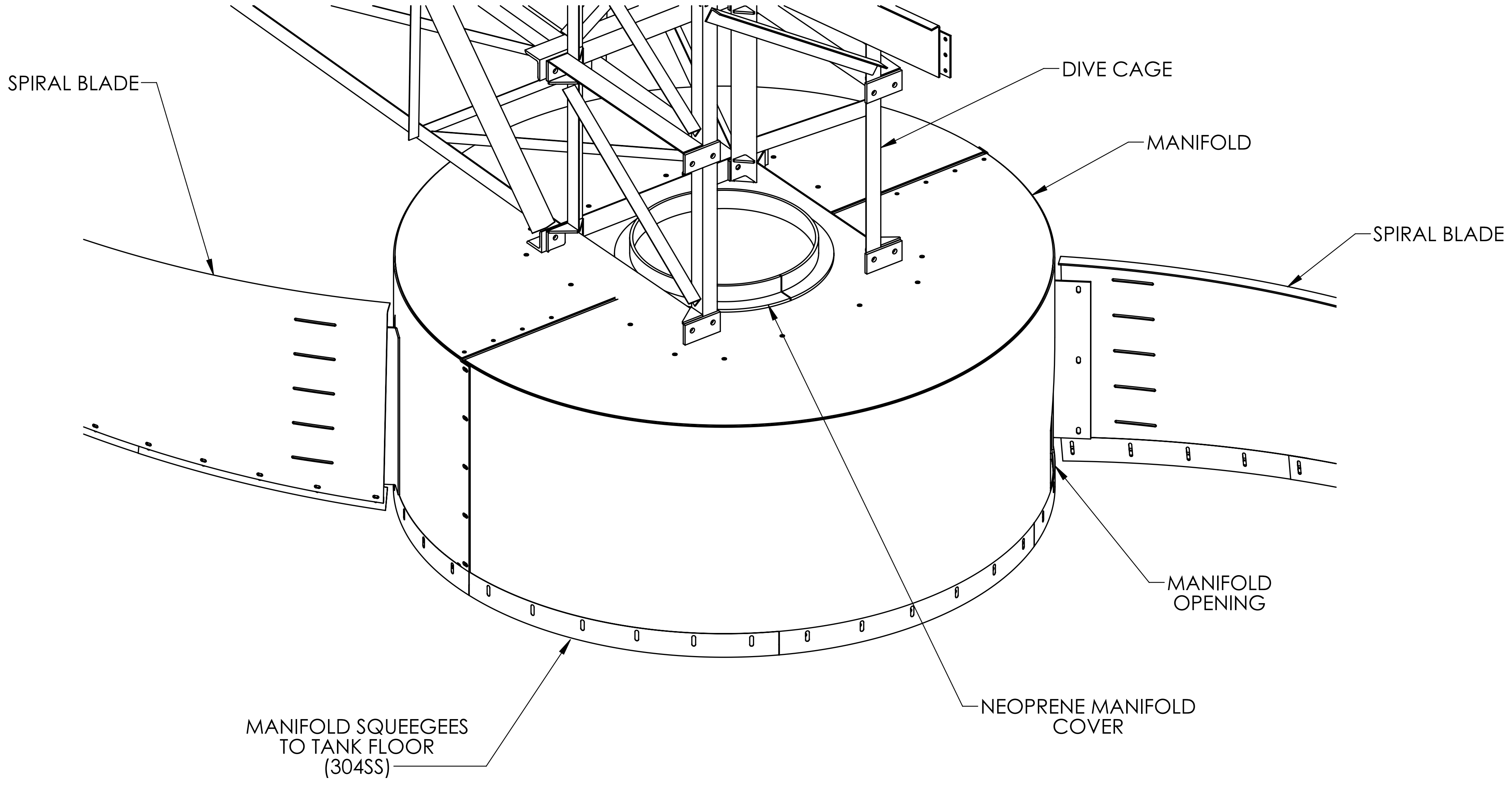

MANIFOLD TRIMETRIC VIEW

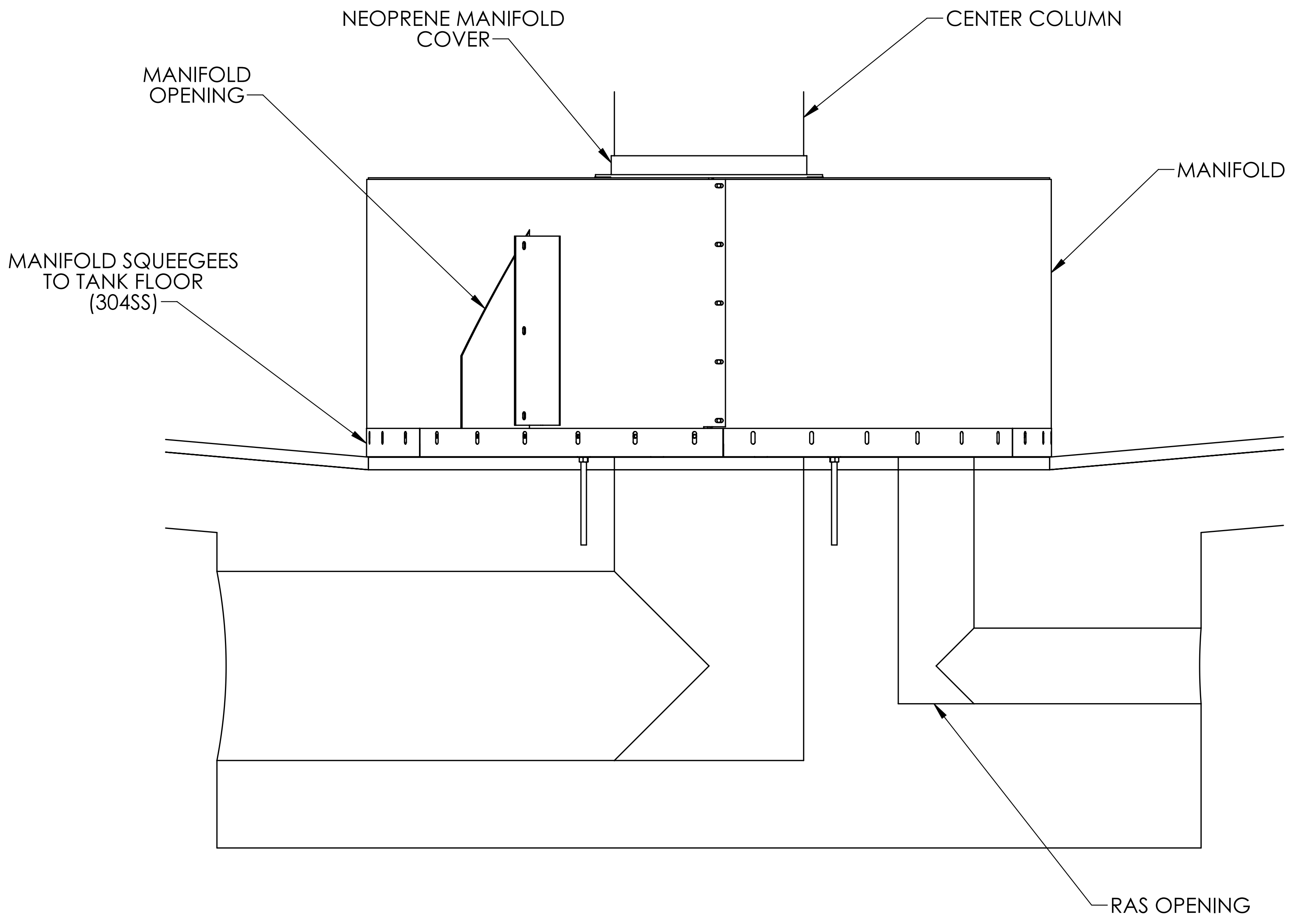

MANIFOLD VIEW

D 22-008 REV A

ClearStream ENVIRONMENTAL
9090 SOUTH 300 WEST
SANDY, UT 84070
OFFICE: (801) 676-1890
FAX: (801) 676-1893

PROPRIETARY AND CONFIDENTIAL

THE INFORMATION CONTAINED IN THIS DRAWING IS THE SOLE PROPERTY OF CLEARSTREAM ENVIRONMENTAL. ANY REPRODUCTION IN PART OR AS A WHOLE WITHOUT THE WRITTEN PERMISSION OF CLEARSTREAM ENVIRONMENTAL IS PROHIBITED.

UNLESS OTHERWISE SPECIFIED:
DIMENSIONS ARE IN INCHES
WEIGHTS ARE IN LBS
TOLERANCES (I.A.W. AWS D1.1, AISC CODE OF STD PRACTICE):
FRACTIONAL: ±1/8"
HOLE LOCATION: ±1/32"

MATERIAL: N/A
WEIGHT EACH:
NUMBER OF MECHANISMS:
TOTAL WEIGHT:

	NAME	DATE
DRAWN	AOG	
CHECKED		
ENG APPR.		
FAB INSP.		

DO NOT SCALE DRAWING
MODEL NUMBER:
DESIGNATION:

Cottage Grove

TITLE:
GENERAL ARRANGEMENT CONTINUED

SIZE D
DWG. / PART NO. 101
REV A
SCALE: 1:50
SHEET 2 OF 2

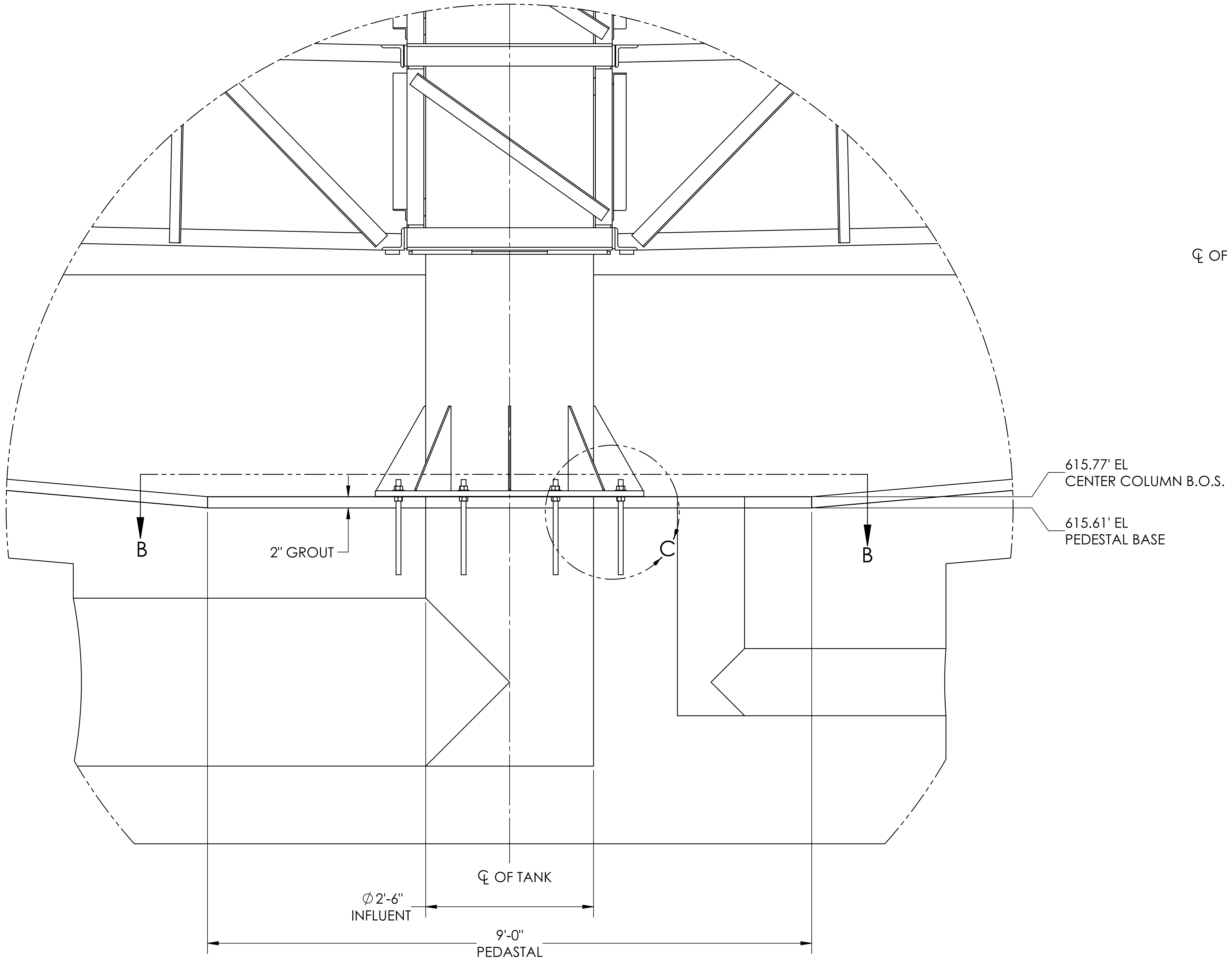

DETAIL A

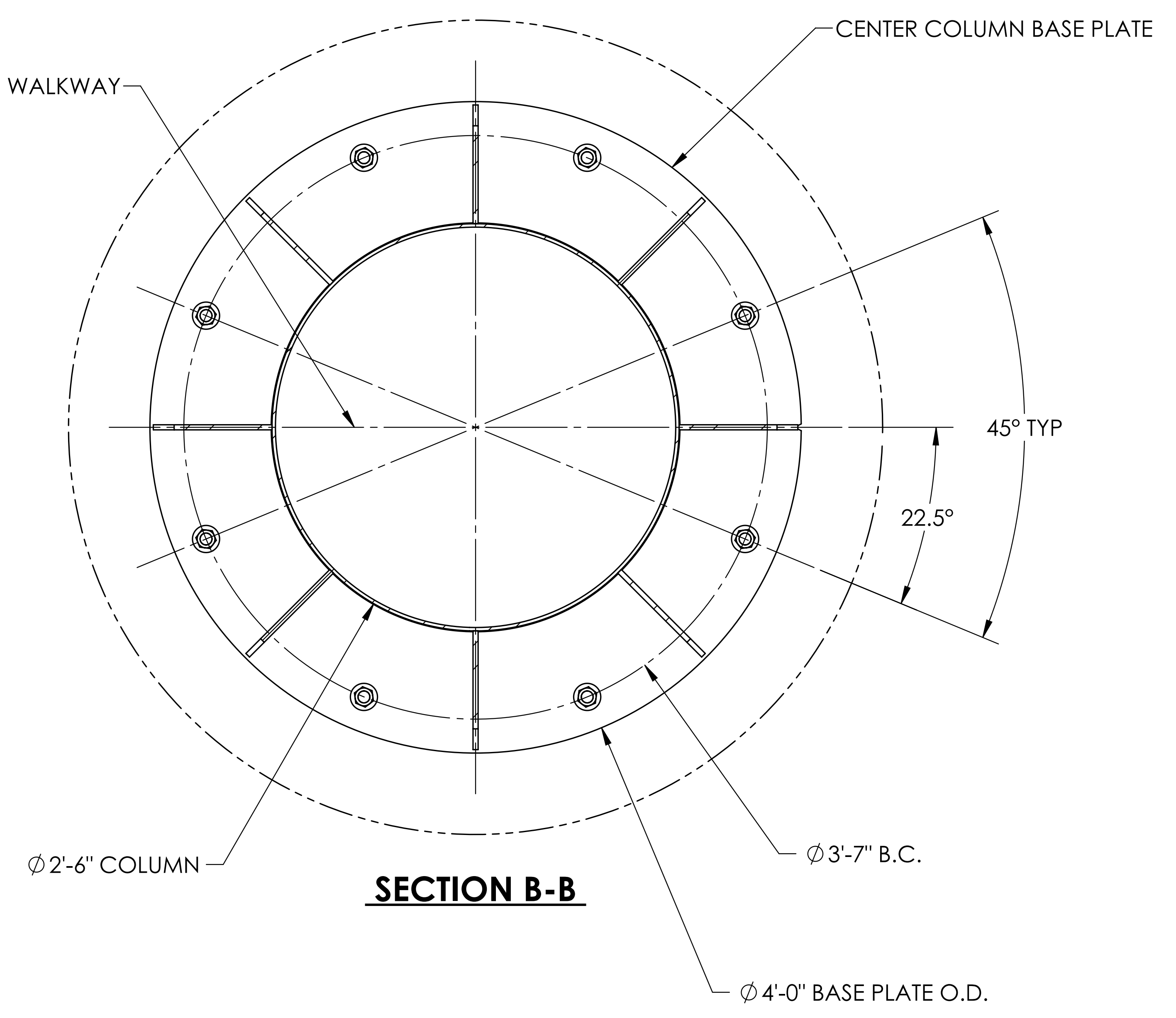

SECTION B-B

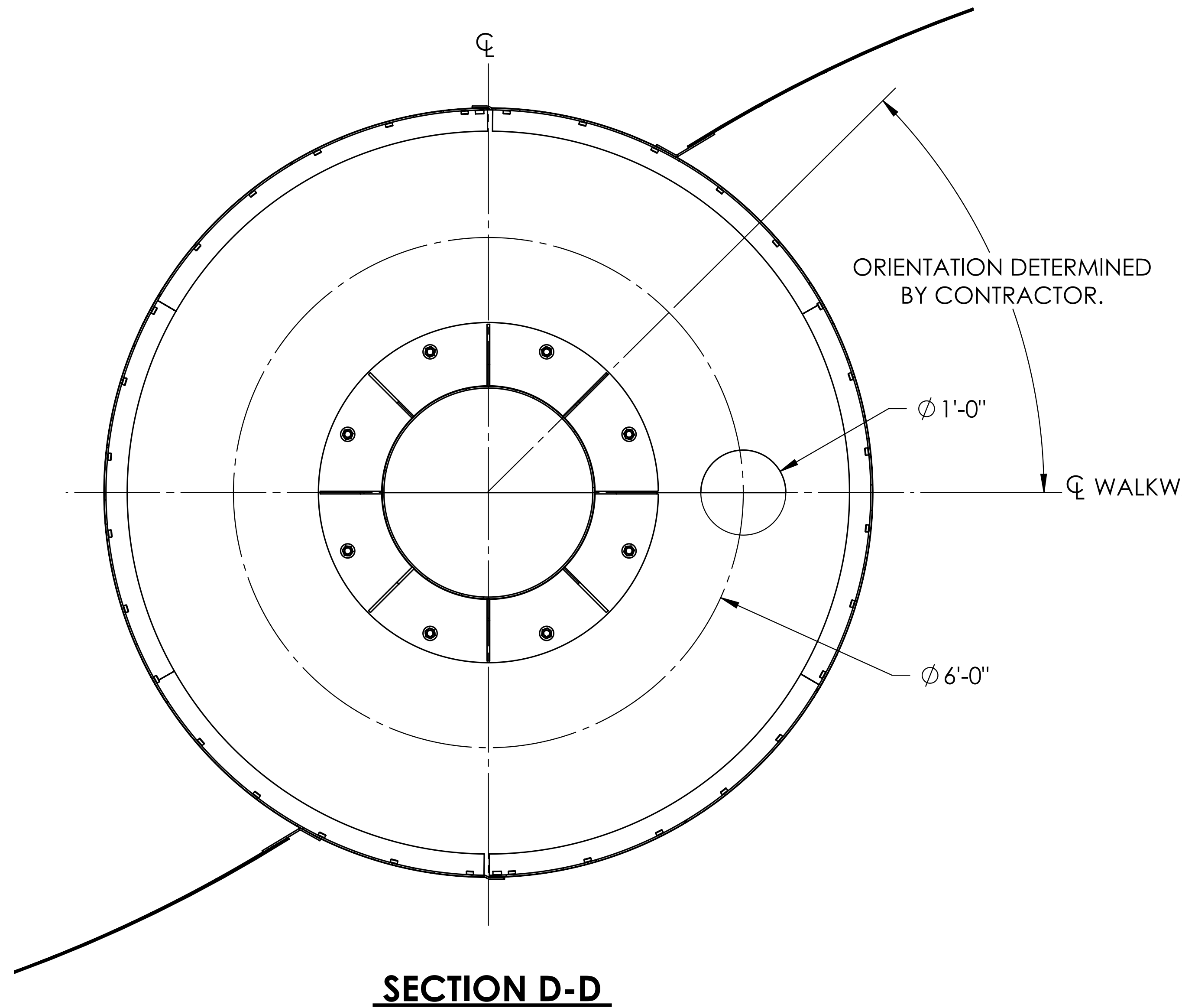

SECTION D-D

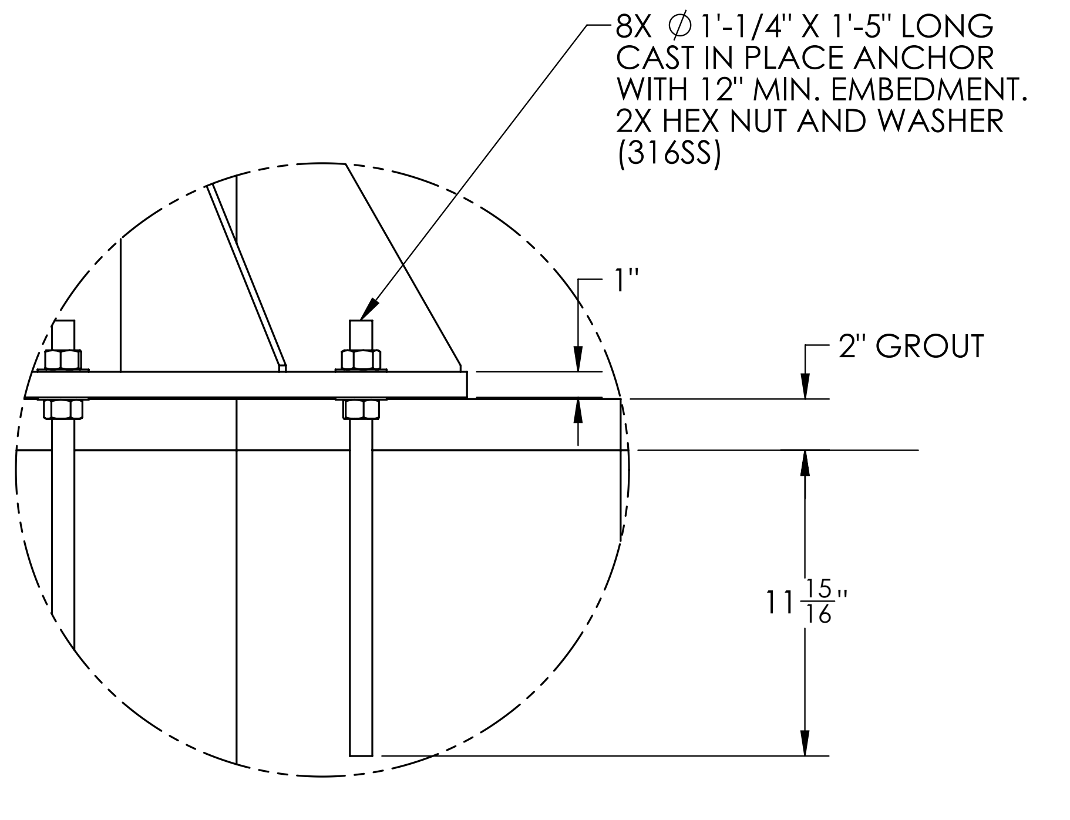

DETAIL C

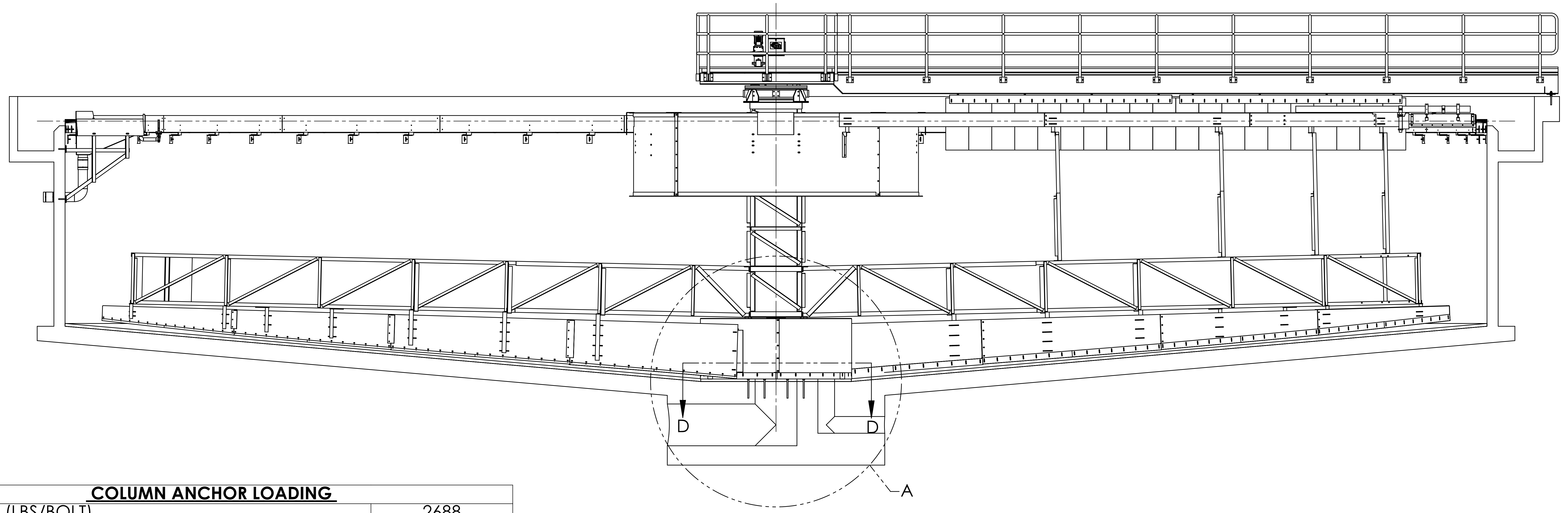

NOTES:

1. CUSTOMER TO CONFIRM ALL DIMENSIONS.

COLUMN ANCHOR LOADING	
DL, DOWN (LBS/BOLT)	2688
LL, DOWN (LBS/BOLT)	913
PEAK DRIVE TORQUE (LBS/BOLT)	2093
EL. HORIZONTAL SHEAR (LBS/BOLT)	753
EL. UP (LBS/BOLT)	301
EL. OVERTURNING MOMENT (FT-LBS/BASEPLATE)	65450

B

REV.	DESCRIPTION	DRAWN	APPROV.	DATE
B	UPDATED LOADING TABLE.	JSH	TSH	8/15/2022
A	UPDATED ELEVTIONS, CORRECTED ERRORS.	JSM	TSH	7/8/2022
0	INITIAL RELEASE	JSM	TSH	5-22

ClearStream ENVIRONMENTAL
9090 SOUTH 300 WEST
SANDY, UT 84070
OFFICE: (801) 676-1890
FAX: (801) 676-1893

PROPRIETARY AND CONFIDENTIAL
THE INFORMATION CONTAINED IN THIS DRAWING IS THE SOLE PROPERTY OF CLEARSTREAM ENVIRONMENTAL. ANY REPRODUCTION IN PART OR AS A WHOLE WITHOUT THE WRITTEN PERMISSION OF CLEARSTREAM ENVIRONMENTAL IS PROHIBITED.

UNLESS OTHERWISE SPECIFIED:
DIMENSIONS ARE IN INCHES
WEIGHTS ARE IN LBS
TOLERANCES (I.A.W. AWS D1.1, AISC CODE OF STD PRACTICE):
FRACTIONAL: ±1/8"
HOLE LOCATION: ±1/32"

MATERIAL: N/A
WEIGHT EACH: N/A
NUMBER OF MECHANISMS: 1
TOTAL WEIGHT: N/A

	NAME	DATE
DRAWN	JM	5-22
CHECKED	TSH	5-22
ENG APPR.	TSH	5-22
FAB INSP.		

DO NOT SCALE DRAWING
MODEL NUMBER:
DESIGNATION:

Cottage Grove

TITLE:
CENTER COLUMN MOUNTING DETAILS

SIZE: D
DWG. / PART NO.: 102
REV: A
SCALE: 1:15
SHEET 1 OF 1

D 22-008 REV A

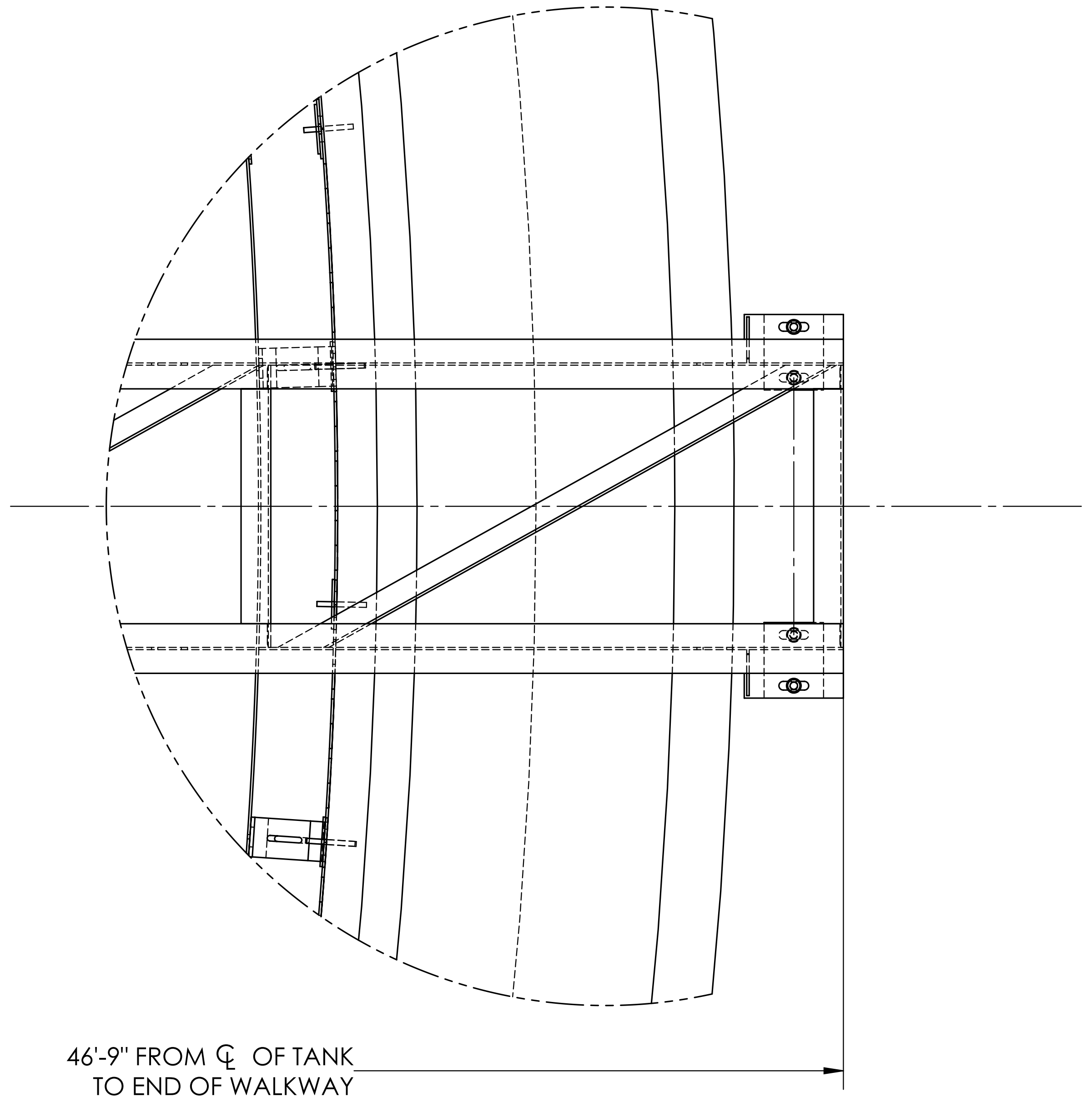

PLAN VIEW
GRATING & HANDRAIL REMOVED FOR CLARITY

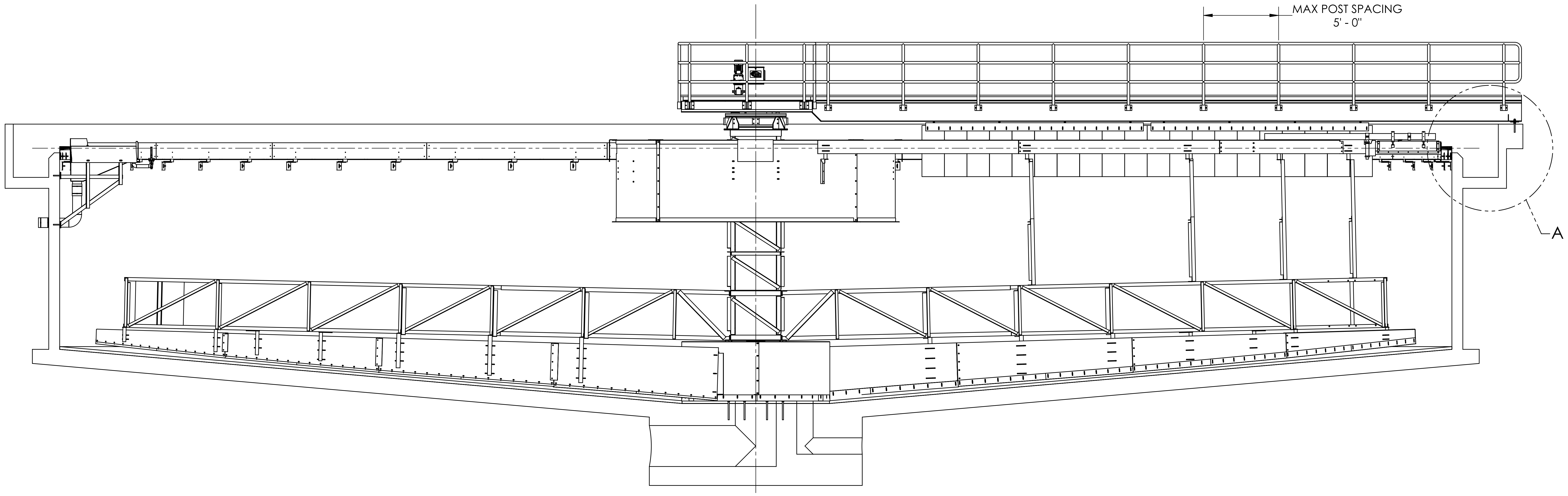

ELEVATION VIEW

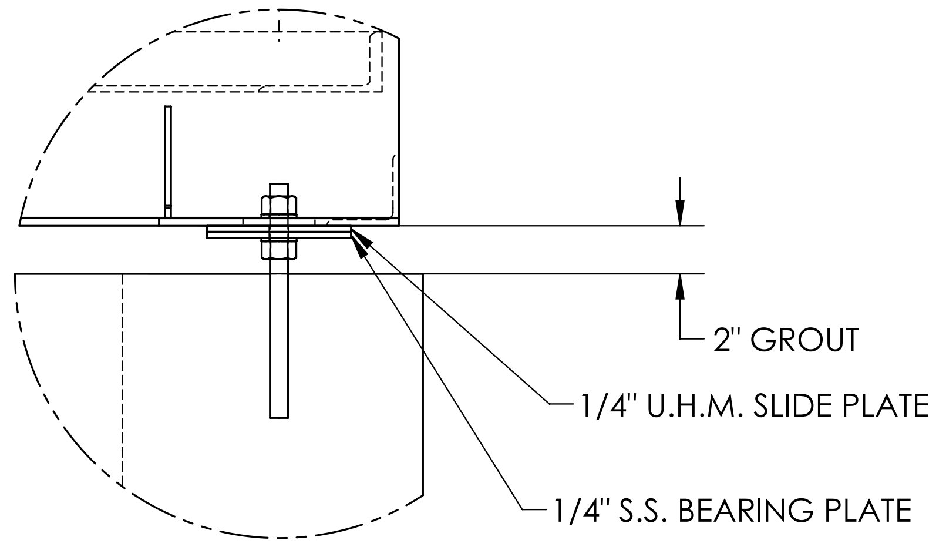

DETAIL B

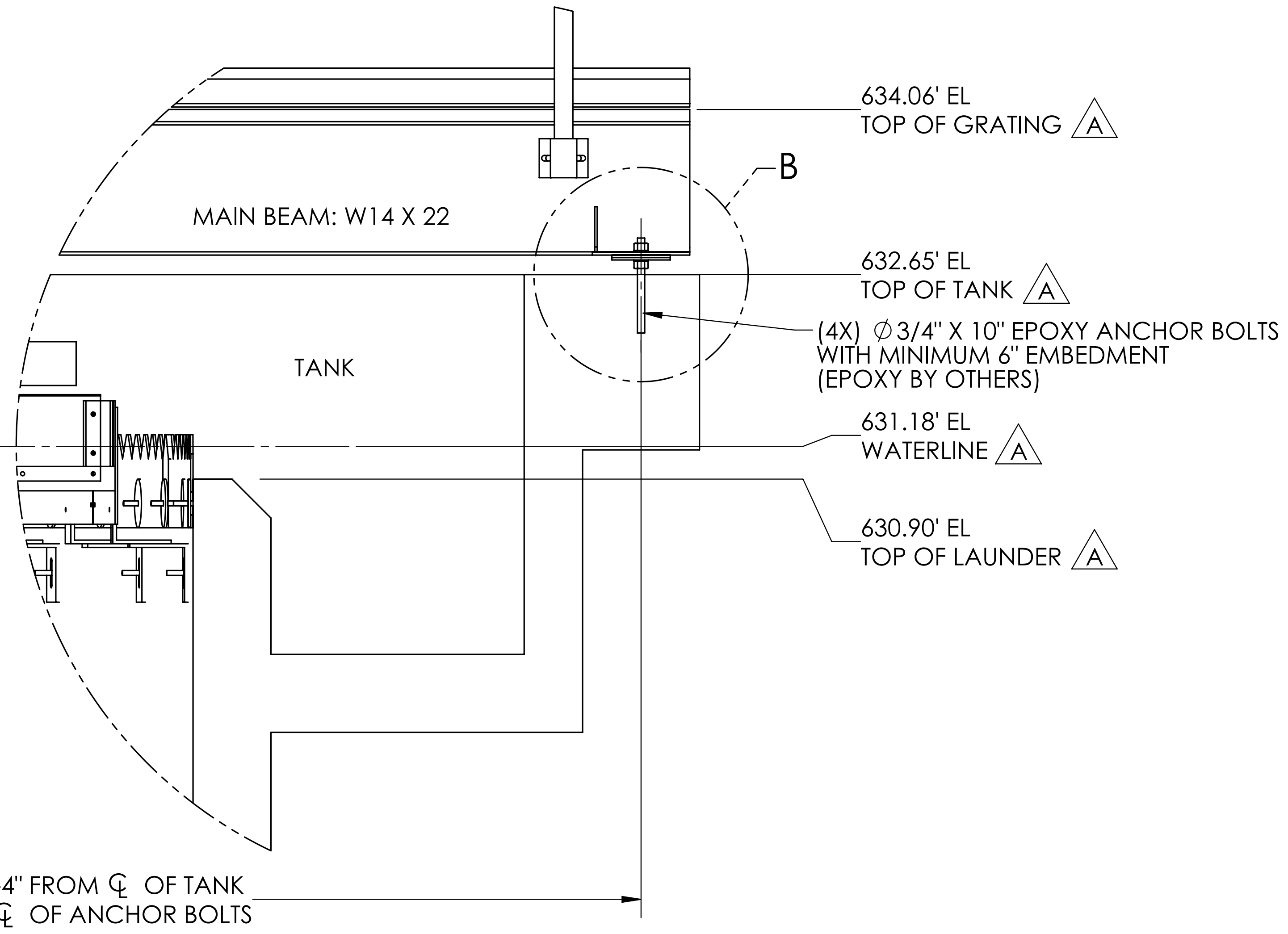

DETAIL A

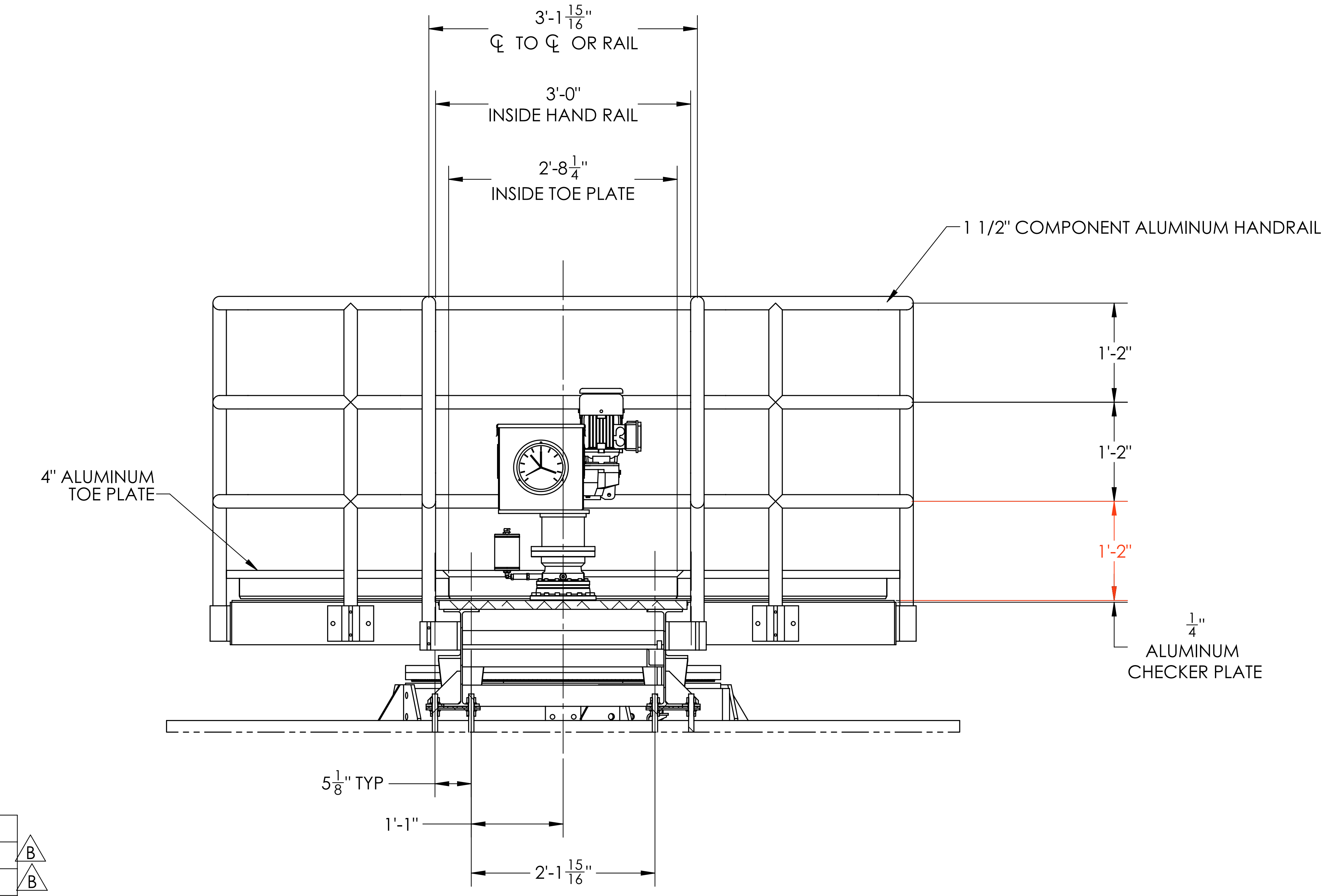

END VIEW

WALKWAY ANCHOR LOADING

DL, DOWN (LBS/JOINT)	733	B
LL, DOWN (LBS/JOINT)	2330	B
LL, HORIZONTAL SHEAR (LBS/JOINT)	0	
EL, HORIZONTAL SHEAR (LBS/JOINT)	586	B
EL, VERTIAL (LBS/JOINT)	176	B
WL, HORIZONTAL SHEAR (LBS/JOINT)	603	B

NOTES:
1. CUSTOMER TO CONFIRM ALL DIMENSIONS.

REV.	DESCRIPTION	DRAWN	APPROV.	DATE
B	UPDATED LOADING TABLE.	JSM	TSH	8/15/2022
A	UPDATED ELEVATIONS. CORRECTED ERRORS.	JSM	TSH	7/7/2022
0	INITIAL RELEASE	JSM	TSH	5/22

ClearStream ENVIRONMENTAL
9090 SOUTH 300 WEST
SANDY, UT 84070
OFFICE: (801) 676-1890
FAX: (801) 676-1893

PROPRIETARY AND CONFIDENTIAL
THE INFORMATION CONTAINED IN THIS DRAWING IS THE SOLE PROPERTY OF CLEARSTREAM ENVIRONMENTAL. ANY REPRODUCTION IN PART OR AS A WHOLE WITHOUT THE WRITTEN PERMISSION OF CLEARSTREAM ENVIRONMENTAL IS PROHIBITED.

UNLESS OTHERWISE SPECIFIED:
DIMENSIONS ARE IN INCHES
WEIGHTS ARE IN LBS
TOLERANCES (I.A.W. AWS D1.1, AISC CODE OF STD PRACTICE):
FRACTIONAL: ±1/8"
HOLE LOCATION: ±1/32"

MATERIAL: N/A
WEIGHT EACH: N/A
NUMBER OF MECHANISMS: 1
TOTAL WEIGHT: N/A

	NAME	DATE
DRAWN	JM	5/22
CHECKED	TSH	5/22
ENG APPR.	TSH	5/22
FAB INSP.		

DO NOT SCALE DRAWING
MODEL NUMBER:
DESIGNATION:

Cottage Grove

TITLE:
WALKWAY
MOUNTING DETAILS

SIZE D
DWG. / PART NO. 103
REV A
SCALE: 1:15
SHEET 1 OF 1

D 22-008 REV A

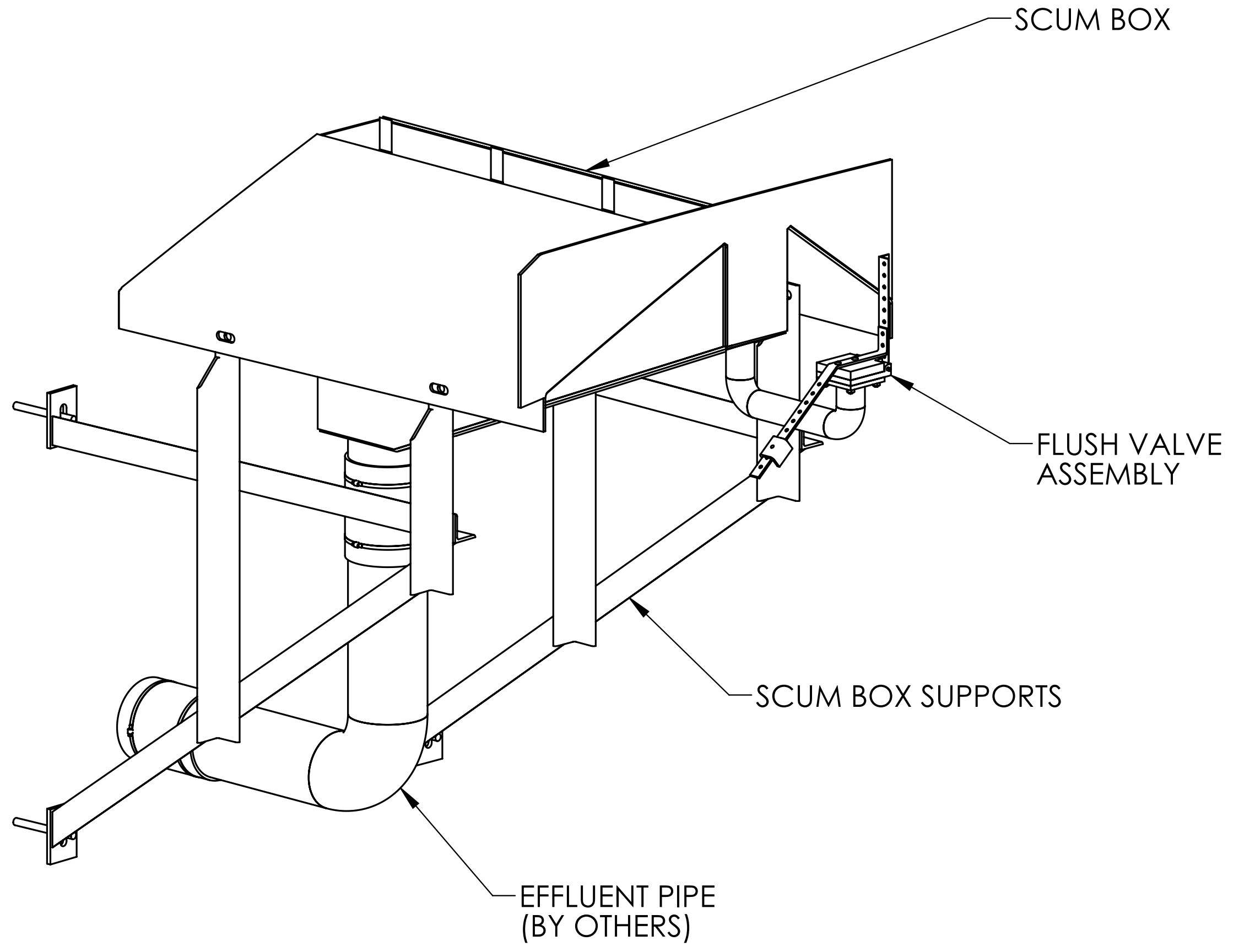

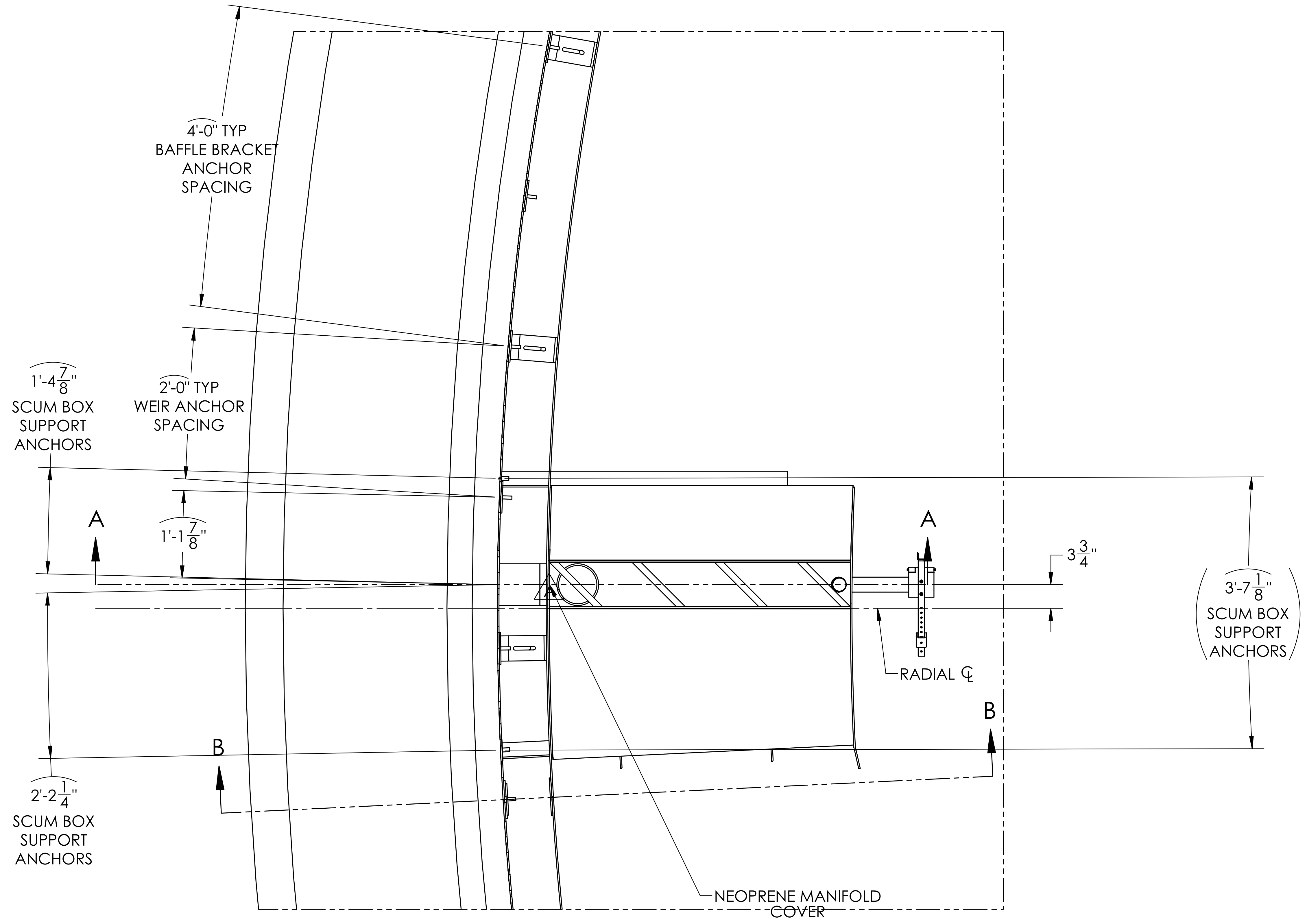

PLAN VIEW
(ARC LENGTH DIMENSIONS
MEASURED ALONG TANK WALL)

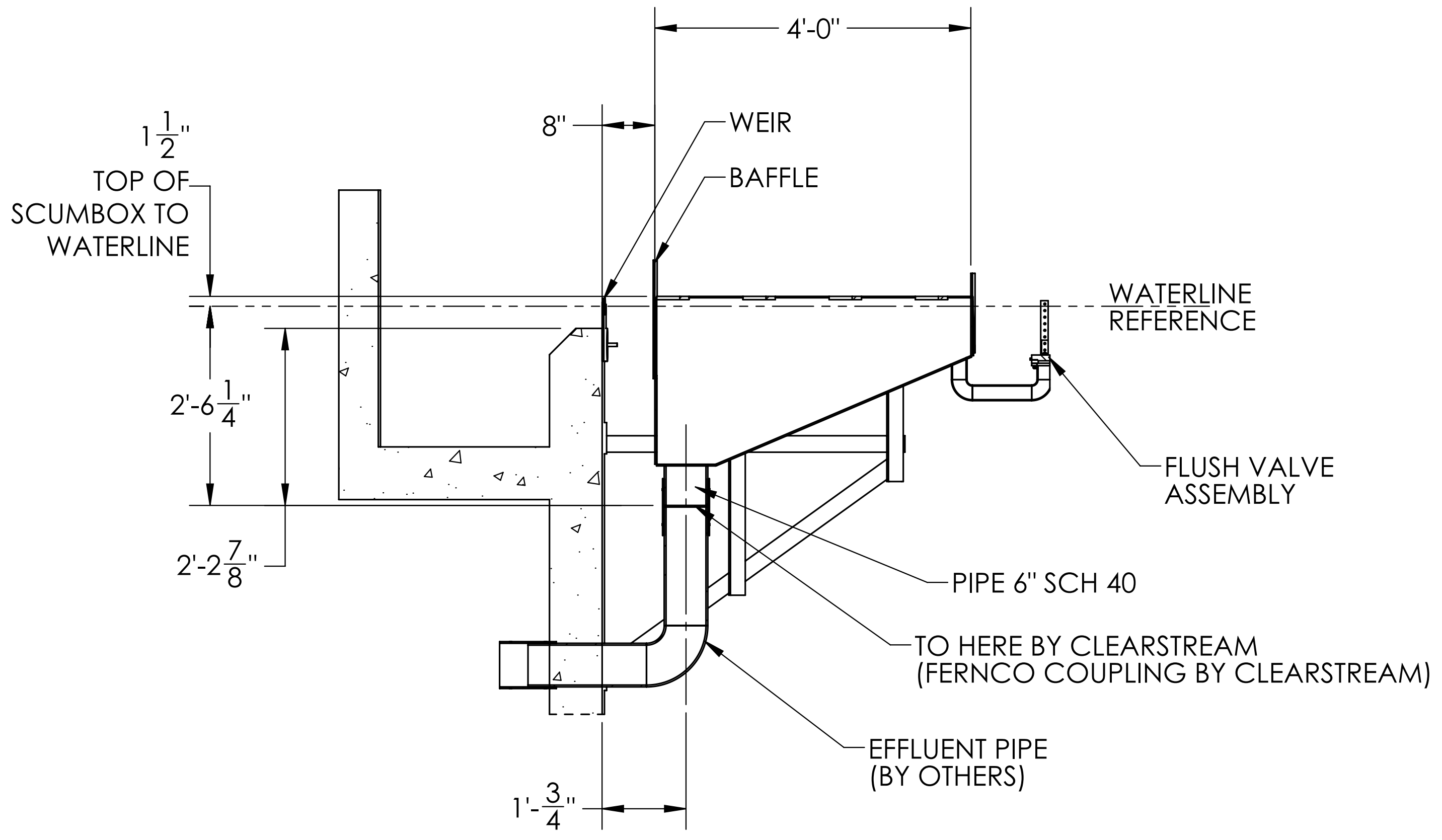

SECTION A-A
SCALE 1:25

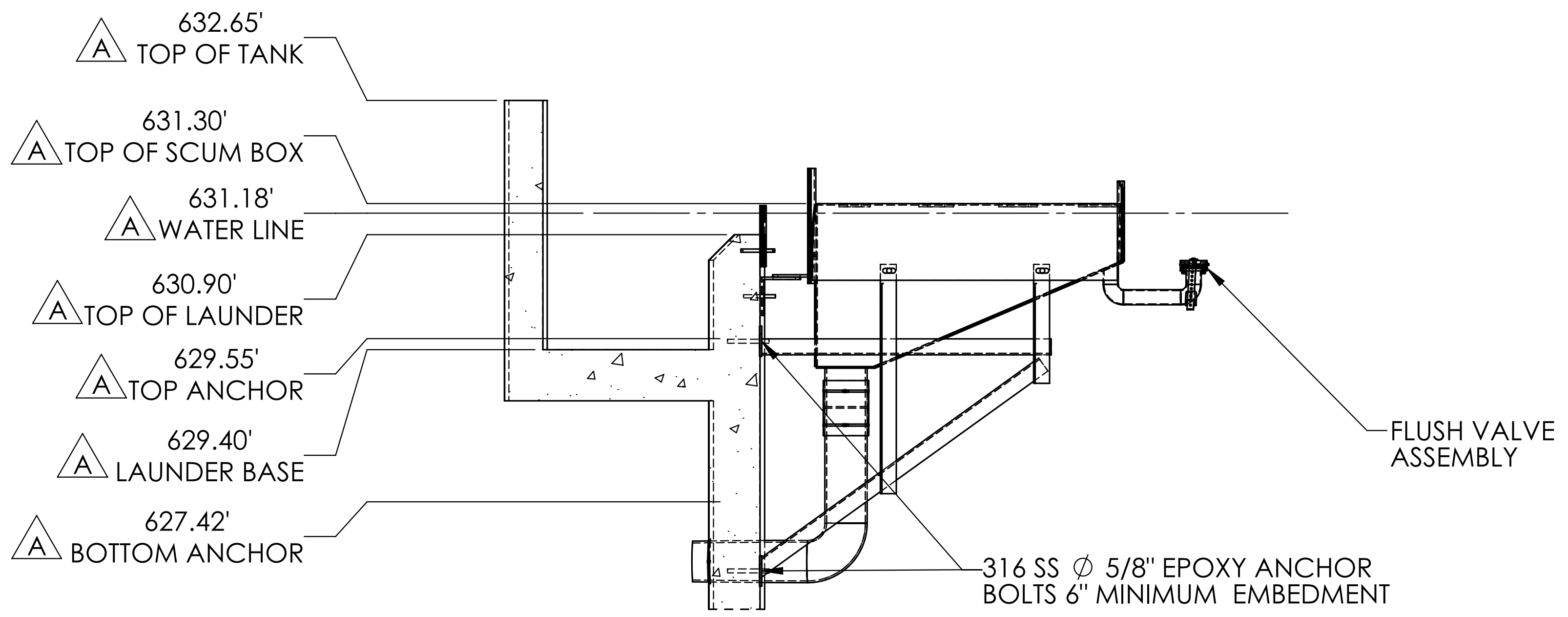

SCUM BOX ANCHOR LOADING	
TOP ANCHOR DL, DOWN (LBS/BOLT)	10
TOP ANCHOR DL, PULL OUT (LBS/BOLT)	376
BOTTOM ANCHOR DL, BOWN (LBS/BOLT)	233
BOTTOM ANCHOR DL, COMPRESSION (LBS/BOLT)	376
TOP ANCHOR EL, VERTICAL (LBS/BOLT)	14
TOP ANCHOR EL, HORIZONTAL (LBS/BOLT)	46
BOTTOM ANCHOR EL, VERTICAL (LBS/BOLT)	57
BOTTOM ANCHOR EL, HORIZONTAL (LBS/BOLT)	77

D 22-008 REV A

REV.	DESCRIPTION	DRAWN	APPROV.	DATE
A	UPDATED ELEVATIONS. CORRECTED ERRORS.	JSM	TSH	7/8/2022
0	INITIAL RELEASE	JSM	TSH	5/22

ClearStream ENVIRONMENTAL
9090 SOUTH 300 WEST
SANDY, UT 84070
OFFICE: (801) 676-1890
FAX: (801) 676-1893

UNLESS OTHERWISE SPECIFIED:
DIMENSIONS ARE IN INCHES
WEIGHTS ARE IN LBS
TOLERANCES (I.A.W. AWS D1.1, AISC CODE OF STD PRACTICE):
FRACTIONAL: ±1/8"
HOLE LOCATION: ±1/32"

MATERIAL: N/A
WEIGHT EACH: N/A
NUMBER OF MECHANISMS: 1
TOTAL WEIGHT: N/A

	NAME	DATE
DRAWN	JM	5/22
CHECKED	TSH	5/22
ENG APPR.	TSH	5/22
FAB INSP.		

DO NOT SCALE DRAWING
MODEL NUMBER:
DESIGNATION:

Cottage Grove
TITLE:
SCUM BOX
MOUNTING DETAILS

SIZE D
DWG. / PART NO. 104
REV A
SCALE: 1:15
SHEET 1 OF 1

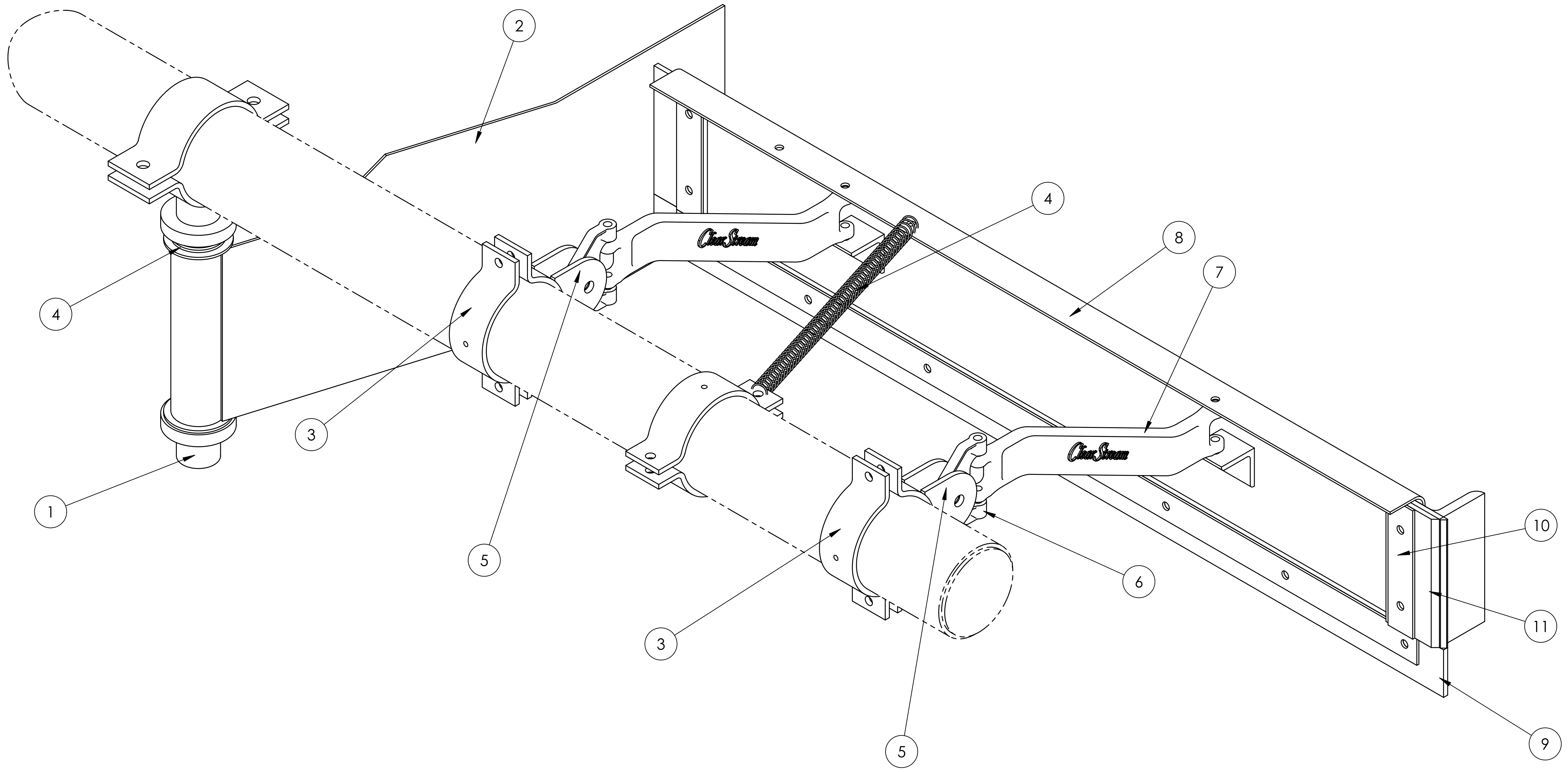

SKIMMER ASSEMBLY

1. HINGE (STAINLESS STEEL)
2. HINGED GATE (STAINLESS STEEL)
3. CLAMPING COLLARS (STAINLESS STEEL)
4. TENSION SPRINGS (STAINLESS STEEL)
5. ARM ATTACHMENT (STAINLESS STEEL)
6. KNUCKLE (STAINLESS STEEL)
7. ARM (STAINLESS STEEL)
8. BLADE (STAINLESS STEEL)
9. SQUEEGEE (NEOPRENE)
10. BACKER BARS (STAINLESS STEEL)
11. GUIDE WIPER (UHMW)

D
22-008
REV 0

REV.	DESCRIPTION	DRAWN	APPROV.	DATE
0	INITIAL RELEASE	JM	TSH	5/22

ClearStream ENVIRONMENTAL
9090 SOUTH 300 WEST
SANDY, UT 84070
OFFICE: (801) 676-1890
FAX: (801) 676-1893

PROPRIETARY AND CONFIDENTIAL

UNLESS OTHERWISE SPECIFIED:
DIMENSIONS ARE IN INCHES
WEIGHTS ARE IN LBS
TOLERANCES (I.A.W. AWS D1.1, AISC CODE OF STD PRACTICE):
FRACTIONAL: ±1/8"
HOLE LOCATION: ±1/32"

MATERIAL: N/A
WEIGHT EACH: N/A
NUMBER OF MECHANISMS:
TOTAL WEIGHT: N/A

	NAME	DATE
DRAWN	JM	5/22
CHECKED	TSH	5/22
ENG APPR.	TSH	5/22
FAB INSP.		

DO NOT SCALE DRAWING
MODEL NUMBER:
DESIGNATION:

Cottage Grove

TITLE:
SKIMMER ASSEMBLY

SIZE D
DWG. / PART NO. 105
REV 0
SCALE: 1:4
SHEET 1 OF 1

NOTES:

JOB: 22-008 - COTTAGE GROVE, OR

CONTRACTOR: -

ENGINEER: -

PROJECT NO: 22-008

SPECIFICATION NO: 11338

TYPE: CAGE DRIVEN
SPIRAL BLADE CLARIFIER

MODEL NUMBER: CCSO.085

DESIGNATION NUMBER: FW09.S4.MPWT

ALLOWABLE STRESS VALUES USED IN THE STRUCTURAL STEEL DESIGN SHALL NOT EXCEED ALLOWABLE STRESSES, AS DEFINED BY CURRENT AISC STANDARDS.

ALL WELDING SHALL BE PERFORMED IN ACCORDANCE WITH THE LATEST EDITION OF A.W.S. WELDING PROCEDURES WITH QUALIFICATION RECORDS PER A.W.S. D1.1, D1.2, D1.6.

ALL STRUCTURAL SHAPES AND PLATES TO BE PER ASTM A276 AND SHALL HAVE A MINIMUM THICKNESS OF 1/4" UNLESS OTHERWISE NOTED.

DRIVE TORQUE (FT-LBS):
CONTINUOUS: 15,000
ALARM: 15,000
CUT-OUT: 18,750
CUT-OUT2: 21,000

MECHANISM DESIGN: 30,000

DESIGN CRITERIA:
WALKWAY:
  LIVE LOAD: 60 LBS/SQFT.
  DEFLECTION: L/360 (MAXIMUM)

SURFACE PREPARATION:
SUBMERGED: ASTM A380

NON-SUBMERGED: SSPC-SP6

SHOP COATING:
SUBMERGED: NA

NON-SUBMERGED: 1 PRIME COAT TNEMEC SERIES N69 EPOXOLINE (6-8 MILS)
1 FINAL COAT TNEMEC SERIES 73 ENDURA SHEILD (2-6 MILS)

COLOR: TBD

DRIVE UNIT: SEE DRIVE GENERAL ARRANGEMENT

MATERIAL:

ANCHOR BOLTS: 316 SS

FASTENERS:
STRUCTURAL CONNECTIONS: 316 SS
SKIMMER, SQUEEQEES & HANDRAIL: 316 SS

MECHANISM:
SQUEEGEES: 304 SS
OTHER COMPONENTS: 304 SS
WALKWAY: CARBON STEEL

HANDRAIL:
1-1/2" SCH 40 ALUMINUM COMPONENT RAILING WITH TOEPLATE

GRATING:
1-1/4" ALUMINUM I-BAR GRATING ON WALKWAY
1/4" THICK ALUMINUM CHECKERED PLATE ON PLATFORM

PROJECT DRAWING SHEETS:

DRG.	SHEET NO.	DESCRIPTION
100	1 OF 1	GENERAL ARRANGEMENT
101	1 OF 1	GENERAL ARRANGEMENT CONTINUED
102	1 OF 1	CENTER COLUMN MOUNTING DETAILS
103	1 OF 1	WALKWAY MOUNTING DETAILS
104	1 OF 1	SCUM BOX MOUNTING DETAILS
105	1 OF 1	SKIMMER ASSEMBLY
106	1 OF 2	GENERAL NOTES
106	2 OF 2	GENERAL NOTES
		DRIVE UNIT C31

OPERATION AND MAINTENANCE MANUALS (O&M): 1 ELECTRONIC COPY

SPARE PARTS:
PER (DRIVE MANUFACTURER) SPARES:
ONE (1) SET OF GASKETS
ONE (1) YEAR SUPPLY OF LUBRICANTS.

CLEARSTREAM SPARES:
ONE (1) SET OF SPRINGS, WIPERS FOR SKIMMER.

REV.	DESCRIPTION	DRAWN	APPROV.	DATE
0	INITIAL RELEASE	JM	TSH	5/22

ClearStream ENVIRONMENTAL
9090 SOUTH 300 WEST
SANDY, UT 84070
OFFICE: (801) 676-1890
FAX: (801) 676-1893

PROPRIETARY AND CONFIDENTIAL

UNLESS OTHERWISE SPECIFIED:
DIMENSIONS ARE IN INCHES
WEIGHTS ARE IN LBS
TOLERANCES (I.A.W. AWS D1.1, AISC CODE OF STD PRACTICE):
FRACTIONAL: ±1/8"
HOLE LOCATION: ±1/32"

MATERIAL: N/A
WEIGHT EACH: N/A
NUMBER OF MECHANISMS: 1
TOTAL WEIGHT: N/A

	NAME	DATE
DRAWN	JM	5/22
CHECKED	TSH	5/22
ENG APPR.	TSH	5/22
FAB INSP.		

DO NOT SCALE DRAWING
MODEL NUMBER:
DESIGNATION:

Cottage Grove

TITLE: GENERAL NOTES

SIZE: D
DWG. / PART NO.: 106
REV: 0
SCALE: 1:1
SHEET 1 OF 2

D 22-008 REV 0

NOTES CONTINUED:

EXCLUSIONS:
DURING MECHANISM INSTALLATION, START-UP, AND OPERATION, CLEARSTREAM ENVIRONMENTAL IS NOT RESPONSIBLE FOR THE SUPPLY OF THE FOLLOWING ITEMS (UNLESS SPECIFICALLY NOTED OTHERWISE IN THE PARTS LIST OR O&M MANUAL): LUBRICANTS, CUTTING FLUIDS, SEALANTS, ADHESIVES, GASKETS, SHIM STOCK, PERISHIBLE WELD SUPPLIES (WELD ROD, WIRE, GAS, ETC.), ASSEMBLY TOOLS (PINS, BARS, STANDARD HAND TOOLS, PERISHIBLE TOOLS (I.E. DRILL BITS, GRIND WHEELS, ETC.), CHAIN FALLS, CRANES, MAN LIFTS, FORKLIFTS, ETC.), INTERIM OR TERMPORARY RIGGING OR BRACING USED DURING EQUIPMENT ERECTION, TEMPORARY OR FINAL POWER TO THE MECHANISMS, LADDERS AND SCAFFOLDING, SURVEYING OR SPECIAL MEASURING INSTRUMENTS, MISCELLANEOUS FASTENERS NOT SPECIFICIALLY CALLED OUT IN THE PROVIDED FASTENER LIST.

CLEARSTREAM ACCEPTS NO FINANCIAL RESPONSIBILITY FOR THE FOLLOWING ACTIVITIES WHICH ARE CONSIDERED PART OF THE NORMAL SCOPE OF WORK PERFORMED BY THE INSTALLATION CONTRACTOR: MECHANISM LEVELING, COMPONENT SHIMMING (ALL FABRICATED STEEL HAS NATURAL VARIABILITY, AND WILL REQUIRE SOME SHIMMING TO PLUMB AND ALIGN), FIT-UP AND STANDARD ADJUSTMENT OF COMPONENTS DURING ASSEMBLY, CONDUIT OR ELECTRICAL WIRING, PIPING.

ADDITIONALLY, CLEARSTREAM WILL NOT ACCEPT ANY CHARGES RELATED TO UNFORSEEN INTERFERENCES OR INTERFACING ISSUES RELATED TO ADJACENT OR MATING EQUIPMENT SUPPLIED BY OTHERS, THAT WAS NOT CLEARLY IDENTIFIED AND DIMENSIONED IN THE APPROVED SUBMITTAL SUPPLIED BY CLEARSTREAM AT THE BEGINNING OF THE PROJECT. IF ITEMS SUCH AS INLET OR OUTLET CONNECTION POINTS, TANK GEOMETRY, ETC. ARE OMMITTED OR INCORRECTLY LOCATED OR IDENTIFIED, BUT APPROVED BY THE CUSTOMER AT THE SUBMITTAL PHASE OF THE PROJECT, CLEARSTREAM ACCEPTS NO RESPONSIBILITY FOR THIS OVERSIGHT, AND WILL NOT ACCEPT ANY CHARGES RELATED TO THE CORRECTION OF THE PROBLEM.

BACKCHARGES:
THE FOLLOWING ARE THE BACKCHARGE / CHANGE ORDER POLICIES OF CLEARSTREAM. UNLESS STATED OTHERWISE, IN WRITING, BY CLEARSTREAM, ANY DEVIATION FROM THIS POLICY WILL RESULT IN CLEARSTREAM DECLINING ANY AND ALL SUBMITTED BACKCHARGES OR CHANGE ORDER REQUESTS.

1) MISSING / DAMAGED HARDWARE: UPON ARRIVAL OF MATERIAL ON-SITE, ANY HARDWARE DETERMINED TO BE MISSING OR DAMAGED, MUST BE IDENTIFIED, DOCUMENTED, AND WRITTEN NOTIFICATION BE GIVEN TO CLEARSTREAM WITHIN TWO BUSINESS DAYS OF THE TRUCK ARRIVAL. DAMAGED EQUIPMENT MUST BE IDENTIFIED AND PHOTOGRAPHED PRIOR TO OFF-LOADING THE DELIVERY TRUCK. IF NOTIFICATION IS NOT RECEIVED WITHIN THIS TIME-FRAME, CLEARSTREAM WILL NOT ACCEPT RESPONSIBILITY TO REPAIR OR REPLACE THE EQUIPMENT IN QUESTION. ISSUES REGARDING COATING DAMAGE ARE COVERED IN NOTE 3 BELOW.

2) NON-CONFORMING HARDWARE: IF A COMPONENT OR SUB-ASSEMBLY IS FOUND TO BE INCORRECT (DESIGN MISTAKE, FABRICATION ERROR, DAMAGED, ETC.), CLEARSTREAM MUST BE NOTIFIED AS SOON AS POSSIBLE, AND THE ISSUE DISCUSSED WITH THE APPROPRIATE PROJECT MANAGER. FOLLOWING AN INITIAL INVESTIGATION AND DISCUSSION, A CLEARSTREAM BACKCHARGE APPROVAL FORM MUST BE FILLED OUT AND SUBMITTED TO CLEARSTREAM. THE COMPLETED FORM MUST DESCRIBE THE ISSUE, PROPOSED RESOLUTION, AND A NOT-TO-EXCEED AMOUNT FOR THE REWORK, REPAIR, OR REPLACEMENT OF THE ITEM IN QUESTION. ONCE THIS FORM IS COMPLETED, AND THE PRICE IS AGREED TO BY AN AUTHORIZED CLEARSTREAM REPRESENTATIVE, WRITTEN APPROVAL WILL BE GRANTED TO COMPLETE THE WORK. NOTE: IF THIS PROCEEDURE IS NOT FOLLOWED, AND WRITTEN APPROVAL FOR THE CHANGE IS NOT GRANTED, WITH A STATED NOT-TO-EXCEED AMOUNT FOR THE CHARGE, CLEARSTREAM RESERVES THE RIGHT TO DECLINE ALL FINANCIAL RESPONSIBILITY FOR THE BACKCHARGE. ADDITIONALLY, ANY MODIFICATIONS, CHANGES, ALTERATIONS, ETC. TO THE EQUIPMENT WITHOUT THE EXPRESS WRITTEN CONSENT OF CLEARSTREAM WILL VOID THE COMPANY WARRANTY RELATED TO THE SUPPLIED EQUIPMENT.

3) COATINGS: ANY DAMAGE TO THE FACTORY COATINGS APPLIED TO CLEARSTREAM SUPPLIED EQUPMENT MUST BE NOTED AND DOCUMENTED (PHOTOGRAPHS, IDENTIFICATIONS OF LOCATIONS AND EXTENT OF DAMAGE, ETC.) AT THE POINT OF DELIVERY PRIOR TO OFF-LOADING THE SHIPMENT. WRITTEN NOTIFICATION TO CLEARSTREAM MUST BE RECEIVED WITHIN TWO BUSINESS DAYS, WITH SUPPORTING DOCUMENTATION. IF THIS POLICY IS NOT FOLLOWED, CLEARSTREAM WILL NOT ACCEPT FINANCIAL RESPONSIBILITY FOR THE ISSUE. ANY DAMAGE THAT OCCURS TO THE COATING DURING INSTALLATION (NICKS, SCRATCHES, ETC.) IS CONSIDERED NORMAL INSTALLATION HANDLING DAMAGE, AND SHOULD BE TOUCHED UP AFTER ASSEMBLY PER THE COATING MANUFACTURERES PROCEEDURES. CLEARSTREAM WILL NOT ACCEPT ANY BACKCHARGES RELATED TO TOUCH UP DUE TO INCIDENTAL HANDLING ISSUES. IF COATING REPAIR IS REQUIRED FOR ANY EQUIPMENT MODIFICATION AUTHORIZED BY CLEARSTREAM, THE COST OF THIS ACTIVITY MUST BE INCLUDED IN THE BACKCHARGE NOT-TO-EXCEED AUTHORIZATION FORM. OTHER INSTRUCTIONS AND RECOMMENDATIONS REGARDING COATINGS SYSTEMS IS INCLUDED IN THE O&M MANUAL FOR REFERENCE.

4) SITE VISIT BY CLEARSTREAM PERSONNEL: IF A FIELD PROBLEM IS ENCOUNTERED, AND A VISIT BY A CLEARSTREAM REPRESENTATIVE IS REQUIRED, A P.O. TO CLEARSTREAM WITH A NOT-TO-EXCEED AMOUNT FOR THE TRIP MUST BE ISSUED. IF THE FIELD INVESTIGATION REVEALS THAT THE ISSUE IS INDEED CLEARSTREAM'S RESPONSIBILITY, THE P.O. WILL BE CANCELLED, AND CLEARSTREAM WILL ASSUME FINANCIAL RESPONSIBILITY FOR THE COST OF THE SITE VISIT.

SUBMITTAL APPROVAL:
THE CUSTOMER ACCEPTS THE NOTED EXLCUSIONS AND BACKCHARGE POLICY THROUGH WRITTEN APPROVAL OF THIS SUBMITTAL. ADDITIONALLY, THE CONTENTS OF THIS SUBMITTAL (GRAPHICAL OR TEXT) SUPERCEDE ANY OTHER DOCUMENT AT THE POINT OF WRITTEN APPROVAL, AND ARE THE BASIS FROM WHICH THE MECHANISMS WILL BE ANALYZED, DESIGNED, FABRICATED, AND SUPPLIED. FOLLOWING SUBMITTAL APPROVAL, ANY SUBSEQUENT REVISIONS TO THE DESIGN MUST BE FORWARDED TO CLEARSTREAM WITH A WRITTEN REQUEST FOR A SUBMITTAL UPDATE (RE-SUBMITTAL) AND WRITTEN CUSTOMER APPROVAL OF THE UPDATE. NOTE: ANY CHANGES FOLLOWING SUBMITTAL APPROVAL BY THE CUSTOMER MAY REQUIRE A COST ADJUSTMENT AND CHANGE ORDER DEPENDING ON THE NATURE OF THE CHANGE, STATUS OF THE MATERIAL ORDER, OR SHOP FABRICATION PROGRESS.

D 22-008 REV 0

ClearStream ENVIRONMENTAL
9090 SOUTH 300 WEST
SANDY, UT 84070
OFFICE: (801) 676-1890
FAX: (801) 676-1893

PROPRIETARY AND CONFIDENTIAL

THE INFORMATION CONTAINED IN THIS DRAWING IS THE SOLE PROPERTY OF CLEARSTREAM ENVIRONMENTAL. ANY REPRODUCTION IN PART OR AS A WHOLE WITHOUT THE WRITTEN PERMISSION OF CLEARSTREAM ENVIRONMENTAL IS PROHIBITED.

UNLESS OTHERWISE SPECIFIED:
DIMENSIONS ARE IN INCHES
WEIGHTS ARE IN LBS
TOLERANCES (I.A.W. AWS D1.1, AISC CODE OF STD PRACTICE):
FRACTIONAL: ±1/8"
HOLE LOCATION: ±1/32"

MATERIAL: N/A
WEIGHT EACH: N/A
NUMBER OF MECHANISMS: 1
TOTAL WEIGHT: N/A

	NAME	DATE
DRAWN	JM	5/22
CHECKED	TSH	5/22
ENG APPR.	TSH	5/22
FAB INSP.		

DO NOT SCALE DRAWING
MODEL NUMBER:
DESIGNATION:

Cottage Grove
TITLE: GENERAL NOTES
SIZE: D
DWG. / PART NO.: 106
REV: 0
SCALE: 1:1
SHEET 2 OF 2

CALCULATIONS

ClearStream ENVIRONMENTAL

9090 South 300 West, Sandy, UT
PH (801) 676-1890 FAX (801) 676-1893

PROJECT: COTTAGE GROVE	PROJECT #: 22-008
LOCATION: Spiral Blade Mechanism	DATE: 6/29
CLIENT:	SHEET: 1 OF 1
CALC: TSH	CHECKED:

Spiral Scraper Depth Design

Given Parameters

Tank Diameter	85				
Rake tip speed (ft/min)	12				Average loading rate and max pumping rate
RPM 1	0.045				
MLSS (mg/l)	3200		3000 to 3500 average		
Recycle Rate (MGD)	2				Soldis Loading Rate
lbs/day	53376	calc		5674.50173	9.4062884
SLR (lb/ft^2/day	9.41	calc			
SVI (L/mg)	200		100 to 120 average range		
SVI (ft^3/lb)	3.21	calc			
# Rake Arms	2				
Attack Angle (deg)	30				
f (efficiency)	0.75	From Literature			
ETD	15	From Literature - 10 to 20			

Step	Radius, ft.	Ave. Rake Velocity, v(sr), ft/min	Scrapped Area, ft^2	Sludge Deposition, lbs/day	Total Sludge	Sludge Volume, ft^3/min	Sludge Volume per arm ft^3/min	Effective transport perimeter (ft)	Area Moved (ft^2)	Sludge depth @ RPM1, inch, Min Blade Depth	
1.625	42.5										
		11.8	426	4004	4004	8.92	4.46	4.41	1.01	3.592	
	40.875										
		11.3	409.04614	3848	7851	17.49	8.75	4.24	2.06	5.131	
	39.25										
		10.9	392.45456	3692	11543	25.71	12.86	4.07	3.16	6.351	
	37.625										
		10.4	375.86299	3535	15078	33.59	16.80	3.90	4.31	7.417	
	36										
		9.9	359.27141	3379	18458	41.12	20.56	3.73	5.52	8.394	
	34.375										
		9.5	342.67984	3223	21681	48.30	24.15	3.55	6.80	9.315	
	32.75										
		9.0	326.08826	3067	24748	55.13	27.57	3.38	8.15	10.202	
	31.125										
		8.6	309.49669	2911	27660	61.62	30.81	3.21	9.60	11.071	
	29.5										
		8.1	292.90511	2755	30415	67.76	33.88	3.04	11.15	11.933	
	27.875										
		7.6	276.31354	2599	33014	73.55	36.77	2.87	12.83	12.801	
	26.25										
		7.2	259.72196	2443	35457	78.99	39.49	2.69	14.66	13.683	
	24.625										
		6.7	243.13039	2287	37744	84.08	42.04	2.52	16.67	14.591	
	23										
		6.3	226.53881	2131	39875	88.83	44.42	2.35	18.91	15.537	
	21.375										
		5.8	209.94724	1975	41849	93.23	46.62	2.18	21.41	16.534	
	19.75										
		5.3	193.35566	1819	43668	97.28	48.64	2.01	24.26	17.599	
	18.125										
		4.9	176.76409	1663	45331	100.99	50.49	1.83	27.55	18.754	
	16.5										
		4.4	160.17251	1507	46838	104.34	52.17	1.66	31.41	20.026	
	14.875										
		4.0	143.58094	1351	48188	107.35	53.68	1.49	36.05	21.454	
	13.25										
		3.5	126.98936	1194	49383	110.01	55.01	1.32	41.77	23.093	
	11.625										
		3.1	110.39779	1038	50421	112.33	56.16	1.14	49.06	25.027	
	10										
		2.6	93.806213	882	51303	114.29	57.15	0.97	58.74	27.387	
	8.375										
		2.1	77.214638	726	52030	115.91	57.95	0.80	72.38	30.399	
	6.75										
		1.7	60.623063	570	52600	117.18	58.59	0.63	93.20	34.495	
	5.125										
		1.2	44.031488	414	53014	118.10	59.05	0.46	129.32	40.635	Manifold
	3.5										
		0.5	38.4846	362	53376	118.91	59.45	0.19	320.87	64.006	

Project:	COTTAGE GROVE OR
Date:	7/1/2022

Influent Hydraulics

	Min (given)	Ave (assumed)	Max (assumed)	Peak (Given)			
Influent MGD	0.4	3.75	8.5	12			
GPM	277.7777778	2604.166667	5902.777778	8333.333333			
ft^3/sec	0.618891667	5.802109375	13.15144792	18.56675			
g (ft/s^2)	32.174						
v (ft^2/s)	1.05E-05						
column Diameter (ft;in)	2.5	30					
column area (ft^2)	4.908738521						
Influent Area (ft^2)	4.908738521						
flow speed (ft/s)	0.126079575	1.181996016	2.679190969	3.782387251			
Outlet Area % of influent area	1.6						
outlet area (ft^2),(in^2)	7.853981634	1130.973355					
outlet speed (ft/s)	0.078799734	0.73874751	1.674494356	2.363992032			
e	0.00015						
e/d column	0.00006						
re	3.00E+04	2.81E+05	6.38E+05	9.01E+05			
f column	2.36E-02	1.52E-02	1.35E-02	1.30E-02			
Length (ft)	15.5						
major loss column(ft)	3.60775E-05	0.002044873	0.009364178	0.017932146			
total major loss (ft)	3.60775E-05	0.002044873	0.009364178	0.017932146			
total major loss (in)	0.00043293	0.024538482	0.112370131	0.21518575	407.746	407.721	0.025
minor loss (ft)	9.64971E-05	0.008481194	0.043574491	0.086847428			
minor exit loss (in)	0.001157966	0.10177433	0.522893892	1.042169141	406.982		0.739
total influent loss (inches)	**0.001590896**	**0.126312812**	**0.635264023**	**1.257354891**			0.764
total influent loss (ft)				**0.104779574**	**<**	**0.2**	**Maximum headloss in column (1.05 B1)**

LA-EDI ports

Number of Outlets	8	8	8	8			
Flow in each Outlet	0.077361458	0.725263672	1.64393099	2.32084375			
Inlet Pipe size (in)	16	16	16	16			
Velocity	0.058021094	0.543947754	1.232948242	1.740632813			
Inlet headloss	2.61581E-05	0.002299055	0.011812033	0.023542321			
Tee Headloss	4.08067E-05	0.003586526	0.018426771	0.036726021			
Outlet headloss	5.23163E-05	0.00459811	0.023624066	0.047084643			
Total Headloss (ft)	0.000119281	0.01048369	0.053862869	0.107352985			
Total Headloss (in)	0.001431373	0.12580428	0.646354433	1.288235824			

Inlet K factor	0.5
Tee K Factor	0.78
Sudden Outlet K Factor	1

K factor from Cameron Hydraulic Data, Page 3-110 thru 3-11

Larson Engineering, Inc.
1488 Bond Street, Suite 100
Naperville, IL 60563-6503
630.357.0540
www.larsonengr.com

Cottage Grove WTF
Mechanism and Walkway
Cottage Grove, OR

Structural Calculations

Book 1 of 1
Calculation Release #2

Prepared for
Clear Stream Environmental
Sandy, Utah

STRUCTURAL
REGISTERED PROFESSIONAL ENGINEER
86835PE
OREGON
JULY 10, 2012
JOSEPH B. TINDER
EXPIRATION DATE: 6/30/24

Digitally signed by Joseph B. Tinder
Date: 2022.09.13 16:18:27-05'00'

Larson Engineering, Inc.
Naperville, Illinois
Project Number 21220680.000

Larson Engineering, Inc.
1488 Bond Street, Suite 100
Naperville, IL 60563-6503
630.357.0540   Fax: 630.357.0164
www.larsonengr.com

Larson

Clarifiers Walkway, Scum Box, Drive Shaft, and Rake Arms
Cottage Grove, OR

Structural Calculations

Larson Engineering, Inc.
1488 Bond Street, Suite 100
Naperville, IL 60563-6503
630.357.0540   Fax: 630.357.0164
www.larsonengr.com

Larson

Clarifiers Walkway, Scum Box, Drive Shaft, and Rake Arms
Cottage Grove, OR

Design Criteria

Larson Engineering, Inc.
1488 Bond Street, Suite 100
Naperville, IL 60563-6503
630.357.0540 Fax: 630.357.0164
www.larsonengr.com

Larson

Design Criteria

Project Information:
Project Location: Cottage Grove, OR
Project Number: 2122680.000

Load Criteria per Performance Specification

1. Drive Cage & Rake Arms – Allowable Design
    a. Continuous Torque (per Client Spec): 15,000 ft-lbs
    b. Peak Torque (per Client spec): 30,000 ft-lbs

2. Walkway – Allowable Design
    a. Walkway Dead Loads (Per Client):
        i. Aluminum Handrail (3 Rails): 9 plf
        ii. Aluminum Surface Grating Load: 3.1 psf
        iii. Aluminum Surface Checker Plate Load: 3.1 psf

    b. Walkway Live Load (per spec):
        i. Surface Load: 60 psf
        ii. Wind Load: 34.39 psf
        iii. Wind Speed: 102 mph
    c. Max Deflection (DL+LL) L/360
    d. Earthquake S_{DS}: 0.562

3. Column Anchors – Strength Design
    a. Dead Loads (Per Client)
        i. Drive Mechanism: 12,500 lbs
        ii. Drive Weight: 2,000 lbs
        iii. Column Weight: 2,000 lbs
    b. Live Loads (Per Client)
        i. Walkway Live Load: 7,300 lbs

4. Mechanism (Cage/Shaft) – Allowable Design
    a. Mechanism Dead Loads (Per Client)
        i. Feedwell: 1,600 lbs

Load Combinations

1. ASCE 7-16 ASD
2. Live Load: 200% of continuous running torque (peak torque) applied evenly to both rake arms.
3. The max deflection shall not exceed L/360 when the dead load and live load are applied.

Members

1. Anchors shall be 316SS.
2. Concrete f’c shall be at minimum 3000 psi designed according to ACI 318-14.
3. Cage, Rake Arms, Feedwell, Column, shall be Stainless Steel and Walkway and Scum Box shall be Carbon steel.
4. Member stress is not to exceed AISC code.
5. Max slenderness ratio is to be in compliance with the latest AISC standard.
6. Overall design standard is to be in compliance with the latest AISC standard.

Larson Engineering, Inc.
1488 Bond Street, Suite 100
Naperville, IL 60563-6503
630.357.0540   Fax: 630.357.0164
www.larsonengr.com

Larson

Clarifiers Walkway, Scum Box, Drive Shaft, and Rake Arms
Cottage Grove, OR

Load Determination

Larson Engineering, Inc.
1488 Bond Street, Suite 100
Naperville, IL 60563-6503
630.357.0540 Fax: 630.357.0164
www.larsonengr.com

Project:	Clearstream - Cottage Grove, OR	SHEET NO.		
	Load Determination	PROJECT NO.		21220680.000
	ASCE 7-16 Seismic Shear Calculatons	BY: JF	DATE:	9/2/2022

Drive Shaft/Walkway On Column

Equipment Weight, W	6,000	lbs	
Seismic Response Modification Factor, R	2.5		
Design Spectral Response for Short Periods, S_{DS}	0.562		Per Contract Drawings
ASCE 7-16 Earthquake Shear, V	1686	lbs	$V=1.25S_{DS}/R*W$ (12.8-1, 12.8-2)
Vertical Shear, E_V	674	lbs	$E_V=0.2*S_{DS}*W$ (12.4-4)

Column, Drive Cage, Rake Arms and Feedwell

Equipment Weight, W	15,500	lbs	Weight of Column, Drive Cage, Rake Arms, and Feedwell
Seismic Response Modification Factor, R	2.5		
Design Spectral Response for Short Periods, S_{DS}	0.562		Per Contract Drawings
ASCE 7-10 Earthquake Shear, V	4356	lbs	V=1.25SDS/R*W (12.8-1, 12.8-2)
Vertical Shear, E_V	1742	lbs	EV=0.2*SDS*W (12.4-4)

Walkway

Equipment Weight, W	4000	lbs	
Seismic Response Modification Factor, R	2.5		
Design Spectral Response for Short Periods, S_{DS}	0.562		Per Contract Drawings
ASCE 7-10 Earthquake Shear, V	1124	lbs	$V=1.25S_{DS}/R*W$ (12.8-1, 12.8-2)
Vertical Shear, E_V	450	lbs	$E_V=0.2*S_{DS}*W$ (12.4-4)

Mechanism

W	12,500	lb	
R	2.5		
Ie	1.25		
sds	0.562		
Earthquake Shear,V	3512.5	lb	V=1.25*SDS/R*W
Earthquake Shear,Ev	1405	lb	Ev=0.2*SDS*W

Project:	Clearstream - Cottage Grove, OR	SHEET NO.			
	Load Determination	PROJECT NO.			21220680.000
	ASCE 7-16 Seismic Shear Calculatons	BY: JF		DATE:	9/2/2022

Scum Box

Equipment Weight, W	340	lbs	
Seismic Response Modification Factor, R	2.5		
Design Spectral Response for Short Periods, S_{DS}	0.562		Per Contract Drawings
ASCE 7-16 Earthquake Shear, V	95.54	lbs	$V=1.25S_{DS}/R*W$ (12.8-1, 12.8-2)
Vertical Shear, E_V	38	lbs	$E_V=0.2*S_{DS}*W$ (12.4-4)

Project:	Clearstream - Cottage Grove, OR	SHEET NO.	
	Load Determination	PROJECT NO.	21220680.000
	ASCE 7-16 Wind Calculatons	BY: JF	DATE: 9/2/2022

ASCE 7-16 Ch. 29

Occupancy Category	3		
Importance Factor, I_W	1		
Wind Exposure Category	C		
Basic Wind Speed, V	102	MPH	Per Contract Drawings
Wind Directionally Factor, K_d	0.85		per Table 26.5-1
Topographic Factor, K_{ZT}	1		Per Contract Drawings
Velocity Pressure Exposure Coefficient, K_Z	0.85		Table 26.10-1
Column, Drive essure, q_z	19.24		$q_z = 0.00256 * K_Z * K_{ZT} * K_d * V^2$
Wind Force Coefficient, C_f	1.4		Fig. 29.4-1
Wind Gust Factor, G	0.85		26.11.1
Design Wind Load	22.90	psf	$= q_z * G * C_f * I_w$
Walkway Beam Height	14	in	W14x22
Horizontal Force, lbs/ft	27	plf	
Walkway Beam Height	8	in	W8x24
Horizontal Force, lbs/ft	15	plf	

⚠ This is a beta release of the new ATC Hazards by Location website. Please contact us with feedback.

ℹ The ATC Hazards by Location website will not be updated to support ASCE 7-22. Find out why.

ATC Hazards by Location

Search Information

Address: Cottage Grove, OR 97424, USA

Coordinates: 43.797623, -123.0595246

Elevation: 645 ft

Timestamp: 2022-08-19T20:45:19.434Z

Hazard Type: Seismic

Reference Document: ASCE7-16

Risk Category: III

Site Class: D-default

Basic Parameters

Name	Value	Description
S_S	0.665	MCE_R ground motion (period=0.2s)
S_1	0.388	MCE_R ground motion (period=1.0s)
S_{MS}	0.843	Site-modified spectral acceleration value
S_{M1}	* null	Site-modified spectral acceleration value
S_{DS}	0.562	Numeric seismic design value at 0.2s SA
S_{D1}	* null	Numeric seismic design value at 1.0s SA

* See Section 11.4.8

▾Additional Information

Name	Value	Description
SDC	* null	Seismic design category
F_a	1.268	Site amplification factor at 0.2s
F_v	* null	Site amplification factor at 1.0s
CR_S	0.867	Coefficient of risk (0.2s)
CR_1	0.856	Coefficient of risk (1.0s)
PGA	0.317	MCE_G peak ground acceleration

F_{PGA}	1.283	Site amplification factor at PGA
PGA_M	0.407	Site modified peak ground acceleration
T_L	16	Long-period transition period (s)
SsRT	0.665	Probabilistic risk-targeted ground motion (0.2s)
SsUH	0.766	Factored uniform-hazard spectral acceleration (2% probability of exceedance in 50 years)
SsD	1.5	Factored deterministic acceleration value (0.2s)
S1RT	0.388	Probabilistic risk-targeted ground motion (1.0s)
S1UH	0.454	Factored uniform-hazard spectral acceleration (2% probability of exceedance in 50 years)
S1D	0.641	Factored deterministic acceleration value (1.0s)
PGAd	0.525	Factored deterministic acceleration value (PGA)

* See Section 11.4.8

The results indicated here DO NOT reflect any state or local amendments to the values or any delineation lines made during the building code adoption process. Users should confirm any output obtained from this tool with the local Authority Having Jurisdiction before proceeding with design.

Please note that the ATC Hazards by Location website will not be updated to support ASCE 7-22. Find out why.

Disclaimer

Hazard loads are provided by the U.S. Geological Survey Seismic Design Web Services.

While the information presented on this website is believed to be correct, ATC and its sponsors and contributors assume no responsibility or liability for its accuracy. The material presented in the report should not be used or relied upon for any specific application without competent examination and verification of its accuracy, suitability and applicability by engineers or other licensed professionals. ATC does not intend that the use of this information replace the sound judgment of such competent professionals, having experience and knowledge in the field of practice, nor to substitute for the standard of care required of such professionals in interpreting and applying the results of the report provided by this website. Users of the information from this website assume all liability arising from such use. Use of the output of this website does not imply approval by the governing building code bodies responsible for building code approval and interpretation for the building site described by latitude/longitude location in the report.

This is a beta release of the new ATC Hazards by Location website. Please contact us with feedback.

The ATC Hazards by Location website will not be updated to support ASCE 7-22. Find out why.

ATC Hazards by Location

Search Information

Address: Cottage Grove, OR 97424, USA

Coordinates: 43.797623, -123.0595246

Elevation: 645 ft

Timestamp: 2022-08-19T20:41:27.944Z

Hazard Type: Wind

ASCE 7-16

MRI 10-Year	66 mph
MRI 25-Year	71 mph
MRI 50-Year	76 mph
MRI 100-Year	81 mph
Risk Category I	89 mph
Risk Category II	96 mph
Risk Category III	102 mph
Risk Category IV	106 mph

ASCE 7-10

MRI 10-Year	72 mph
MRI 25-Year	79 mph
MRI 50-Year	85 mph
MRI 100-Year	91 mph
Risk Category I	100 mph
Risk Category II	110 mph
Risk Category III-IV	115 mph

ASCE 7-05

ASCE 7-05 Wind Speed	85 mph

The results indicated here DO NOT reflect any state or local amendments to the values or any delineation lines made during the building code adoption process. Users should confirm any output obtained from this tool with the local Authority Having Jurisdiction before proceeding with design.

Please note that the ATC Hazards by Location website will not be updated to support ASCE 7-22. Find out why.

Disclaimer

Hazard loads are interpolated from data provided in ASCE 7 and rounded up to the nearest whole integer. Per ASCE 7, islands and coastal areas outside the last contour should use the last wind speed contour of the coastal area – in some cases, this website will extrapolate past the last wind speed contour and therefore, provide a wind speed that is slightly higher. NOTE: For queries near wind-borne debris region boundaries, the resulting determination is sensitive to rounding which may affect whether or not it is considered to be within a wind-borne debris region.

Mountainous terrain, gorges, ocean promontories, and special wind regions shall be examined for unusual wind conditions.

While the information presented on this website is believed to be correct, ATC and its sponsors and contributors assume no responsibility or liability for its accuracy. The material presented in the report should not be used or relied upon for any specific application without competent examination and verification of its accuracy, suitability and applicability by engineers or other licensed professionals. ATC does not intend that the use of this information replace the sound judgment of such competent professionals, having experience and knowledge in the field of practice, nor to substitute for the standard of care required of such professionals in interpreting and applying the results of the report provided by this website. Users of the information from this website assume all liability arising from such use. Use of the output of this website does not imply approval by the governing building code bodies responsible for building code approval and interpretation for the building site described by latitude/longitude location in the report.

Rake Arm Torque

Continuous Torque	15,000	FT-LBS
Per RISA	53	LB Point Loads (one arm)

Point Load No.	Dist From Center Point	Load	Moment	Two Side	
1	4.50 ft	53.0 lbs	239 ft-lbs	477 ft-lbs	
2	10.00 ft	53.0 lbs	530 ft-lbs	1060 ft-lbs	
3	15.50 ft	53.0 lbs	822 ft-lbs	1643 ft-lbs	
4	21.00 ft	53.0 lbs	1113 ft-lbs	2226 ft-lbs	
5	26.50 ft	53.0 lbs	1405 ft-lbs	2809 ft-lbs	
6	32.00 ft	53.0 lbs	1696 ft-lbs	3392 ft-lbs	
7	37.50 ft	53.0 lbs	1988 ft-lbs	3975 ft-lbs	
			Total:	15,582 ft-lbs	OK

Rake Arm Torque

Peak Torque	30,000	FT-LBS
Per RISA	106	LB Point Loads (one arm)

Point Load No.	Dist From Center Point	Load	Moment	Two Side
1	4.50 ft	106.0 lbs	477 ft-lbs	954 ft-lbs
2	10.00 ft	106.0 lbs	1060 ft-lbs	2120 ft-lbs
3	15.50 ft	106.0 lbs	1643 ft-lbs	3286 ft-lbs
4	21.00 ft	106.0 lbs	2226 ft-lbs	4452 ft-lbs
5	26.50 ft	106.0 lbs	2809 ft-lbs	5618 ft-lbs
6	32.00 ft	106.0 lbs	3392 ft-lbs	6784 ft-lbs
7	37.50 ft	106.0 lbs	3975 ft-lbs	7950 ft-lbs
			Total:	31,164 ft-lbs

OK

Larson Engineering, Inc.
1488 Bond Street, Suite 100
Naperville, IL 60563-6503
630.357.0540   Fax: 630.357.0164
www.larsonengr.com

Larson

Clarifiers Walkway, Scum Box, Drive Shaft, and Rake Arms
Cottage Grove, OR

Drive Shaft - Rake Arms

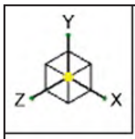

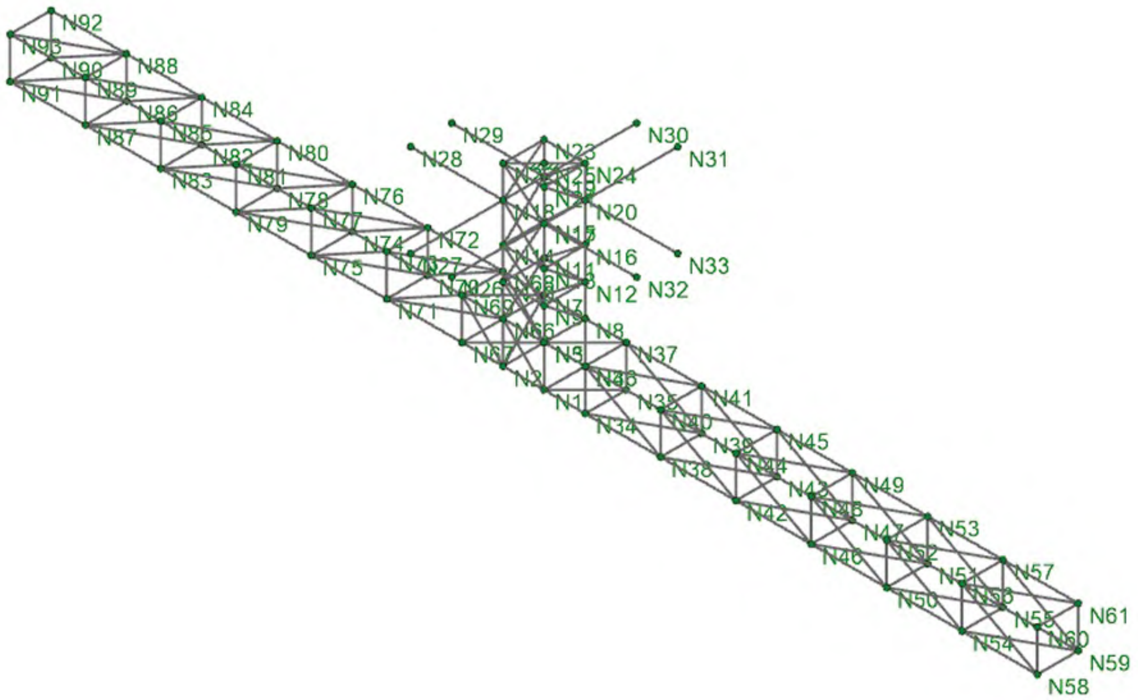

LEI	COTTAGE GROVE, OR	SK-1
JF		Aug 22, 2022
21220680.000	Node Labels	22-008 COTTAGE GROVE Drive…

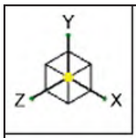

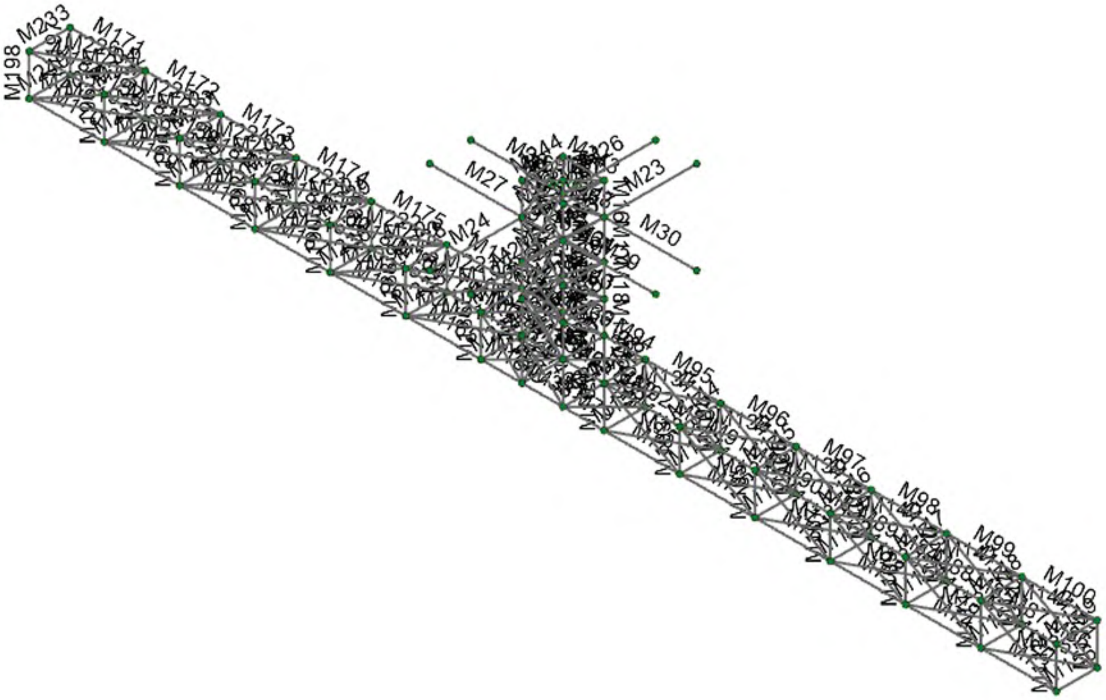

LEI	COTTAGE GROVE, OR	SK-2
JF		Aug 22, 2022
21220680.000	Member Labels	22-008 COTTAGE GROVE Drive…

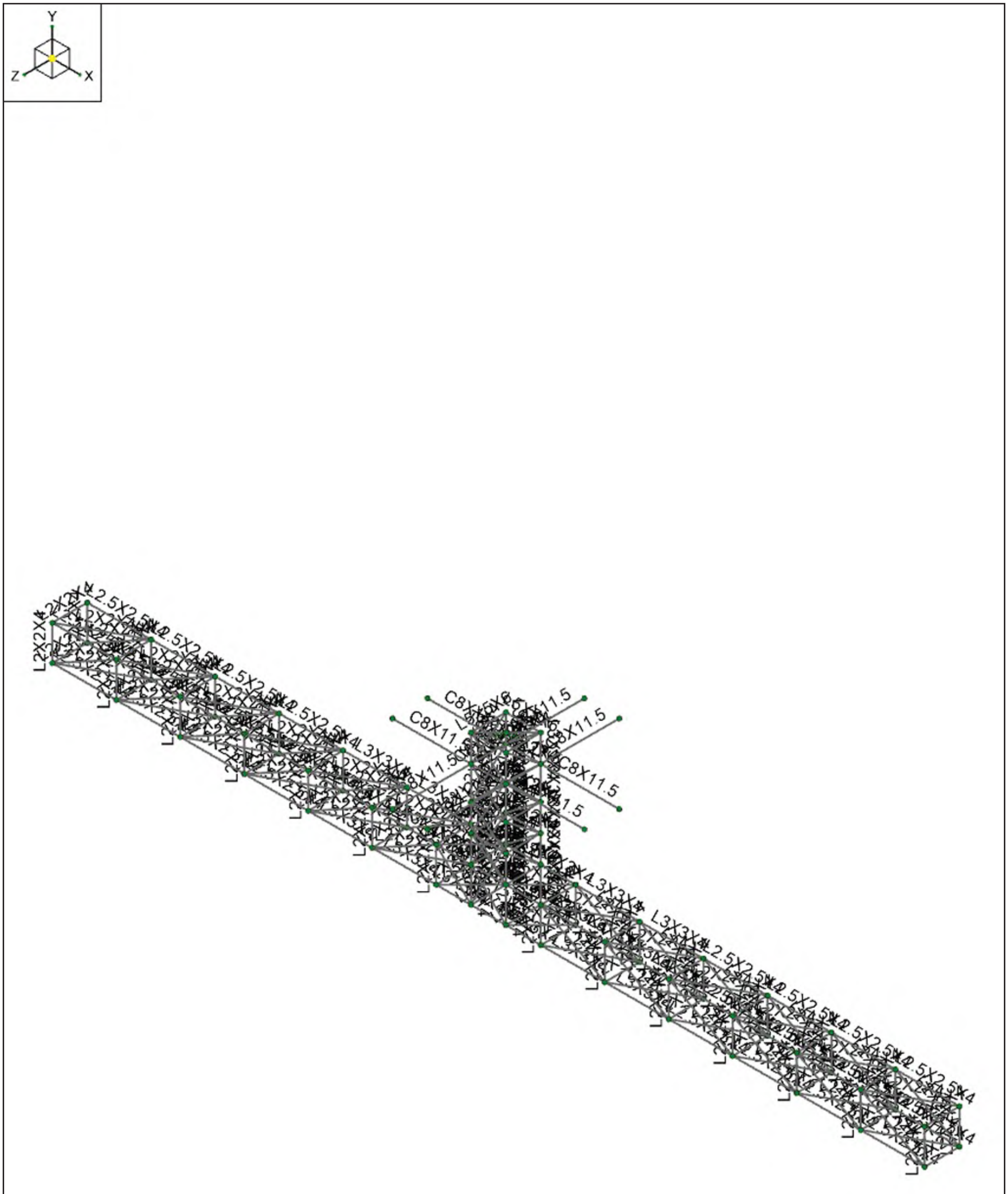

LEI	COTTAGE GROVE, OR	SK-3
JF		Aug 22, 2022
21220680.000	Member Shapes	22-008 COTTAGE GROVE Drive…

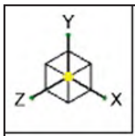

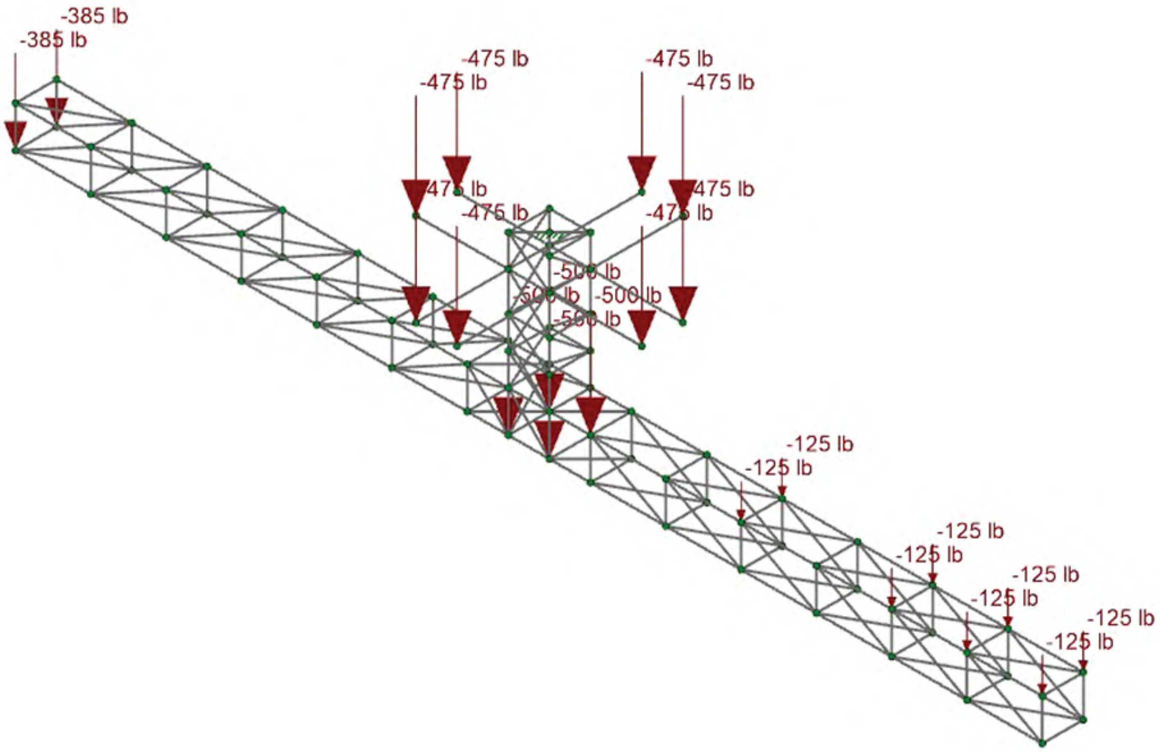

Loads: BLC 1, DL

LEI	COTTAGE GROVE, OR	SK-4
JF		Aug 22, 2022
21220680.000	BLC 1 - Dead Load	22-008 COTTAGE GROVE Drive…

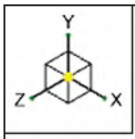

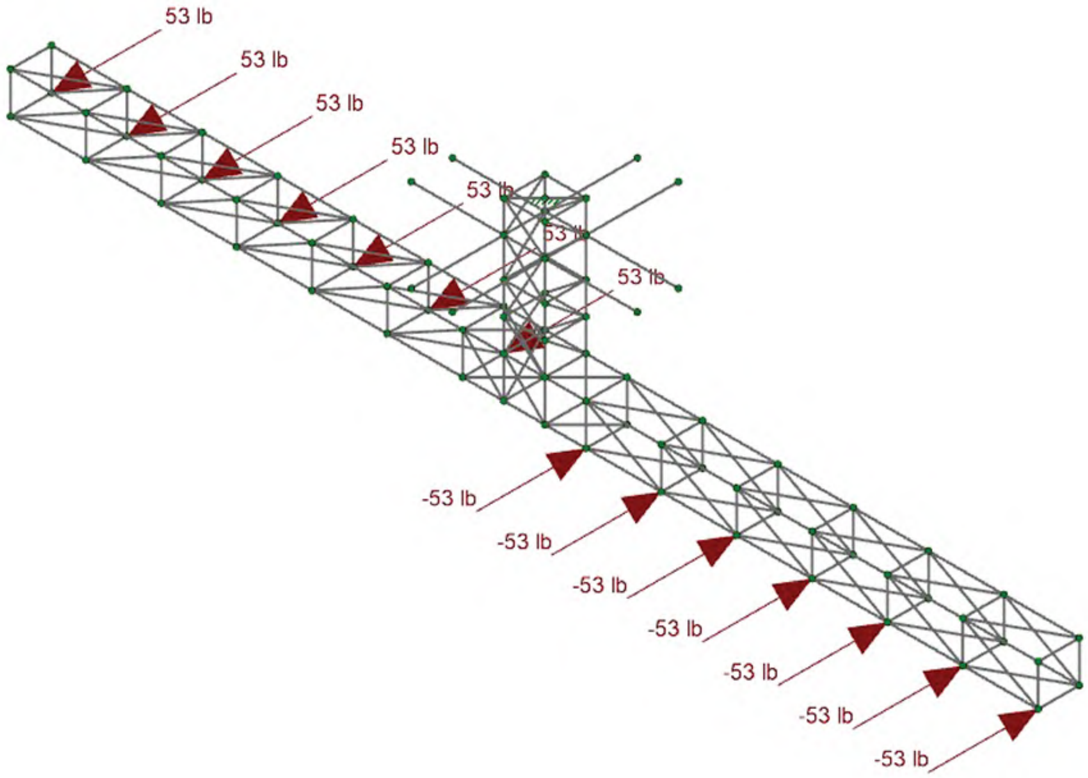

Loads: BLC 2, LL

LEI	COTTAGE GROVE, OR	SK-5
JF		Aug 22, 2022
21220680.000	BLC 2 - Live Load (Continuous)	22-008 COTTAGE GROVE Drive…

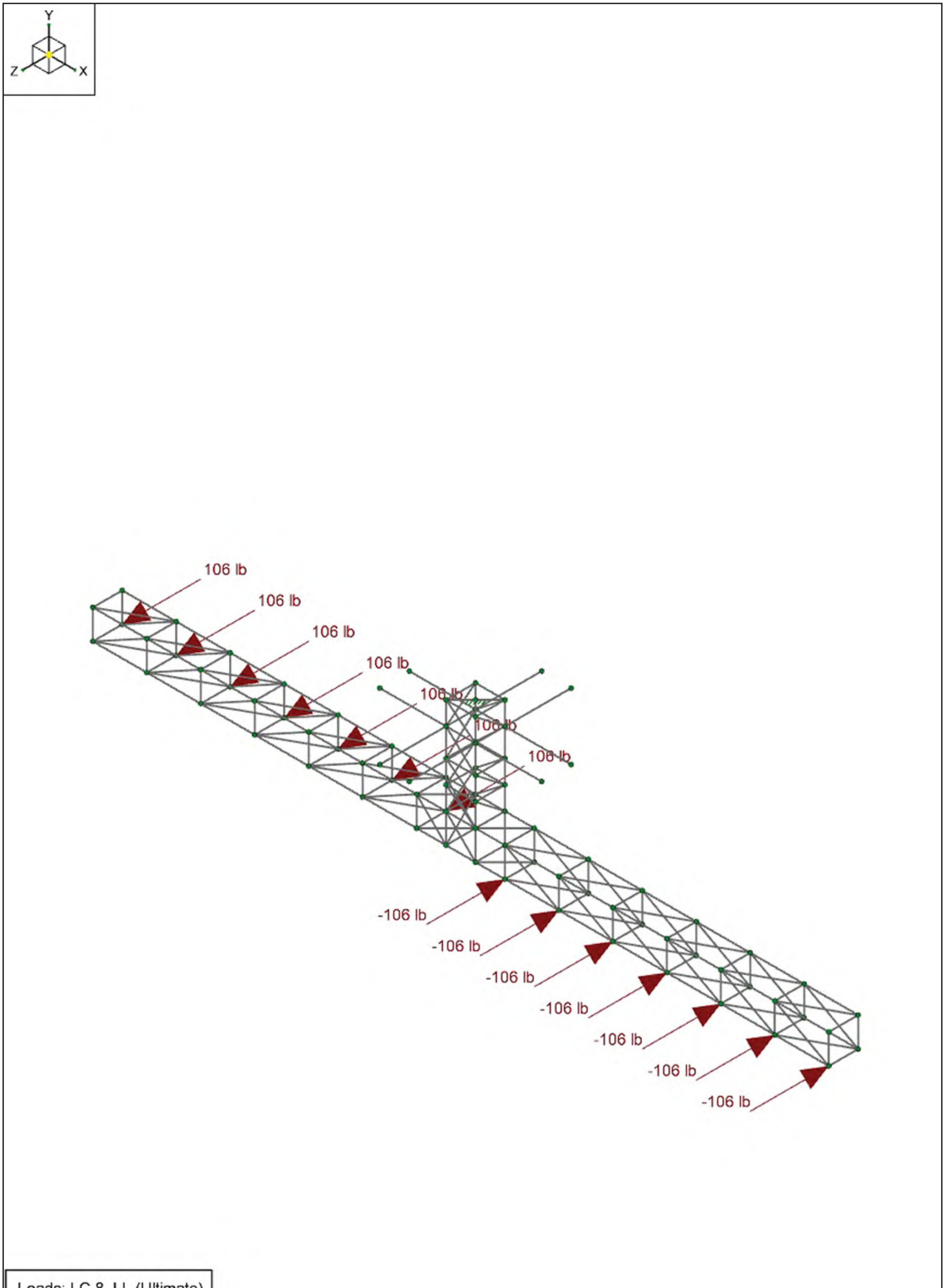

LEI	COTTAGE GROVE, OR	SK-6
JF		Aug 22, 2022
21220680.000	Live Load (Peak)	22-008 COTTAGE GROVE Drive…

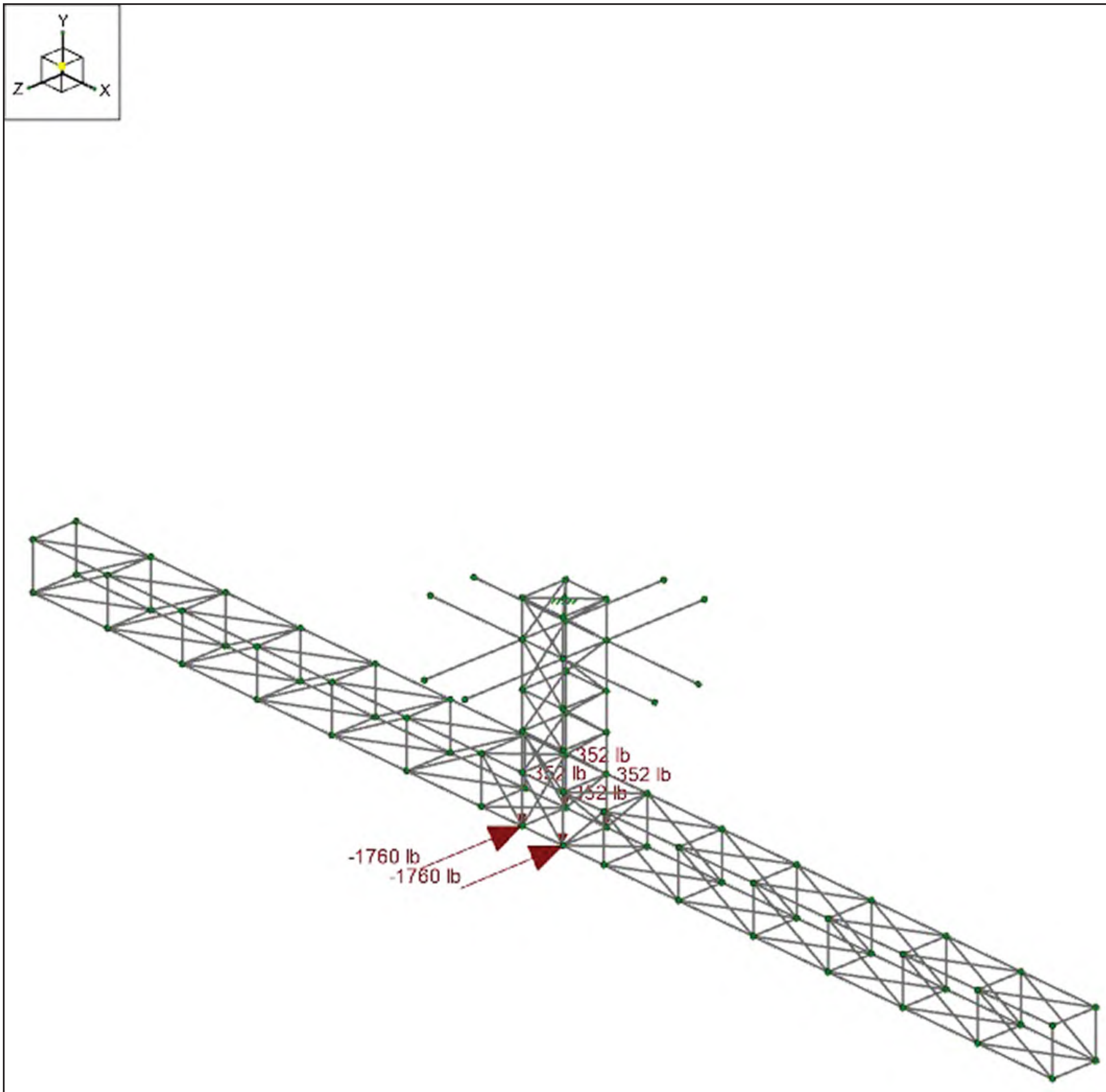

Loads: BLC 3, EL
Envelope Only Solution

LEI	COTTAGE GROVE, OR	SK-3
JF		Sep 02, 2022
21220680.000	BLC 3 - Earthquake Load	22-008 COTTAGE GROVE Drive…

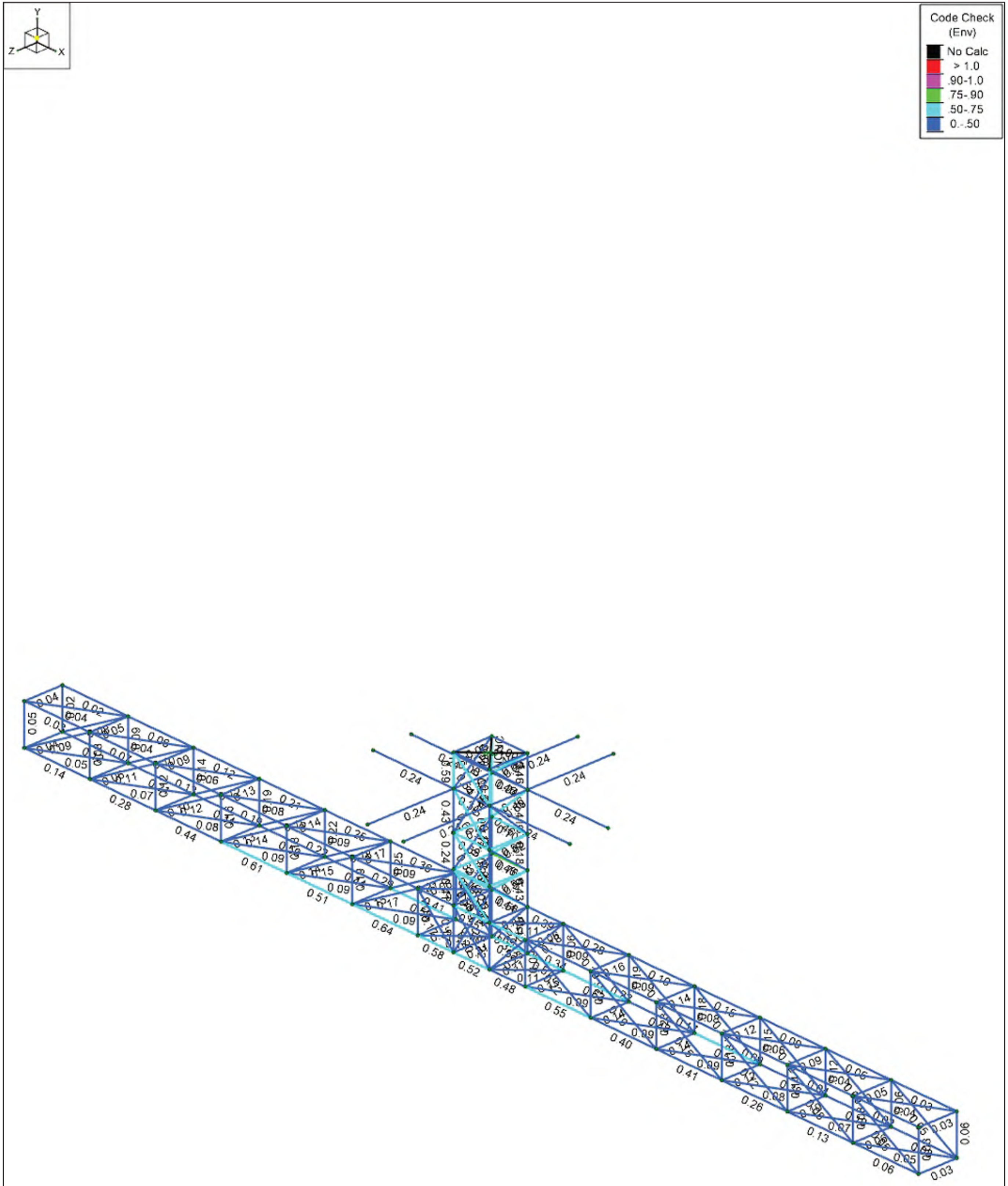

Member Code Checks Displayed (Enveloped)
Envelope Only Solution

LEI	COTTAGE GROVE, OR	SK-2
JF		Sep 02, 2022
21220680.000	Envelope Member Unity Check	22-008 COTTAGE GROVE Drive Cage Mech Stan…

Hot Rolled Steel Properties

	Label	E [psi]	G [psi]	Nu	Therm. Coeff. [1e^{5}°F^{-1}]	Density [lb/ft^{3}]	Yield [psi]	Ry	Fu [psi]	Rt
1	A992	2.9e+7	1.115e+7	0.3	0.65	490	50000	1.1	65000	1.1
2	A36 Gr.36	2.9e+7	1.115e+7	0.3	0.65	490	36000	1.5	58000	1.2
3	A572 Gr.50	2.9e+7	1.115e+7	0.3	0.65	490	50000	1.1	65000	1.1
4	A500 Gr.B RND	2.9e+7	1.115e+7	0.3	0.65	527	42000	1.4	58000	1.3
5	A500 Gr.B Rect	2.9e+7	1.115e+7	0.3	0.65	527	46000	1.4	58000	1.3
6	A53 Gr.B	2.9e+7	1.115e+7	0.3	0.65	490	35000	1.6	60000	1.2
7	A1085	2.9e+7	1.115e+7	0.3	0.65	490	50000	1.4	65000	1.3
8	304 SS	2.9e+7	1.115e+7	0.3	0.65	499	30000	1.5	58000	1.2

Hot Rolled Steel Design Parameters

	Label	Shape	Length [ft]	Lcomp top [ft]	Channel Conn.	a [ft]	Function
1	M1	Cage Vert	3		N/A	N/A	Lateral
2	M2	Cage Vert	2.333		N/A	N/A	Lateral
3	M3	Cage Vert	2.333		N/A	N/A	Lateral
4	M4	Cage Vert	2.833		N/A	N/A	Lateral
5	M5	Cage Vert	2.333		N/A	N/A	Lateral
6	M6	Cage Vert	2.333		N/A	N/A	Lateral
7	M7	Cage Vert	2.833		N/A	N/A	Lateral
8	M8	Cage Vert	2.333		N/A	N/A	Lateral
9	M9	Cage Vert	2.333		N/A	N/A	Lateral
10	M10	Cage Vert	3		N/A	N/A	Lateral
11	M11	Cage Vert	2.333		N/A	N/A	Lateral
12	M12	Cage Vert	2.833		N/A	N/A	Lateral
13	M13	Cage Vert	2.333		N/A	N/A	Lateral
14	M14	Cage Vert	2.333		N/A	N/A	Lateral
15	M15	Cage Vert	3		N/A	N/A	Lateral
16	M16	Cage Vert	2.333		N/A	N/A	Lateral
17	M17	Cage Vert	2.833		N/A	N/A	Lateral
18	M18	Cage Vert	2.333		N/A	N/A	Lateral
19	M19	Cage Vert	2.333		N/A	N/A	Lateral
20	M20	Cage Vert	3		N/A	N/A	Lateral
21	M21	Feedwell Support	6.75	Lbyy	N/A	N/A	Lateral
22	M22	Cage Horizontal	3	Lbyy	N/A	N/A	Lateral
23	M23	Feedwell Support	6.75	Lbyy	N/A	N/A	Lateral
24	M24	Feedwell Support	6.75	Lbyy	N/A	N/A	Lateral
25	M25	Cage Horizontal	3	Lbyy	N/A	N/A	Lateral
26	M26	Feedwell Support	6.75	Lbyy	N/A	N/A	Lateral
27	M27	Feedwell Support	6.75	Lbyy	N/A	N/A	Lateral
28	M28	Cage Horizontal	3	Lbyy	N/A	N/A	Lateral
29	M29	Feedwell Support	6.75	Lbyy	N/A	N/A	Lateral
30	M30	Feedwell Support	6.75	Lbyy	N/A	N/A	Lateral
31	M31	Cage Horizontal	3	Lbyy	N/A	N/A	Lateral
32	M32	Feedwell Support	6.75	Lbyy	N/A	N/A	Lateral
33	M33	Cage compression	3	Lbyy	N/A	N/A	Lateral
34	M34	Cage compression	3	Lbyy	N/A	N/A	Lateral
35	M35	Cage compression	3	Lbyy	N/A	N/A	Lateral
36	M36	Cage compression	3	Lbyy	N/A	N/A	Lateral
37	M37	Cage tension	3	Lbyy	N/A	N/A	Lateral
38	M38	Cage tension	3	Lbyy	N/A	N/A	Lateral
39	M39	Cage tension	3	Lbyy	N/A	N/A	Lateral
40	M40	Cage tension	3	Lbyy	N/A	N/A	Lateral
41	M41	Cage Horizontal	3	Lbyy	N/A	N/A	Lateral
42	M42	Cage Horizontal	3	Lbyy	N/A	N/A	Lateral
43	M43	Cage Horizontal	3	Lbyy	N/A	N/A	Lateral

Hot Rolled Steel Design Parameters (Continued)

	Label	Shape	Length [ft]	Lcomp top [ft]	Channel Conn.	a [ft]	Function
44	M44	Cage Horizontal	3	Lbyy	N/A	N/A	Lateral
45	M45	Feedwell Support	3	Lbyy	N/A	N/A	Lateral
46	M46	Feedwell Support	3	Lbyy	N/A	N/A	Lateral
47	M47	Feedwell Support	3	Lbyy	N/A	N/A	Lateral
48	M48	Feedwell Support	3	Lbyy	N/A	N/A	Lateral
49	M49	Cage dia	4.243		N/A	N/A	Lateral
50	M50	Cage dia	4.243		N/A	N/A	Lateral
51	M51	Cage dia	4.243		N/A	N/A	Lateral
52	M52	Cage dia	4.243		N/A	N/A	Lateral
53	M53	Cage dia	3.8		N/A	N/A	Lateral
54	M54	Cage dia	3.8		N/A	N/A	Lateral
55	M55	Cage dia	3.8		N/A	N/A	Lateral
56	M56	Cage dia	3.8		N/A	N/A	Lateral
57	M57	Cage dia	3.8		N/A	N/A	Lateral
58	M58	Cage dia	3.8		N/A	N/A	Lateral
59	M59	Cage dia	3.8		N/A	N/A	Lateral
60	M60	Cage dia	3.8		N/A	N/A	Lateral
61	M61	Cage dia	4.126		N/A	N/A	Lateral
62	M62	Cage dia	4.126		N/A	N/A	Lateral
63	M63	Cage dia	4.126		N/A	N/A	Lateral
64	M64	Cage dia	4.126		N/A	N/A	Lateral
65	M65	Cage dia	3.8		N/A	N/A	Lateral
66	M66	Cage dia	3.8		N/A	N/A	Lateral
67	M67	Cage dia	3.8		N/A	N/A	Lateral
68	M68	Cage dia	3.8		N/A	N/A	Lateral
69	M73	Arm 2	5.5	Lbyy	N/A	N/A	Lateral
70	M74	Arm 2	5.5	Lbyy	N/A	N/A	Lateral
71	M75	Arm 2	5.5	Lbyy	N/A	N/A	Lateral
72	M76	Arm 2	5.5	Lbyy	N/A	N/A	Lateral
73	M77	Arm	5.5	Lbyy	N/A	N/A	Lateral
74	M78	Arm	5.5	Lbyy	N/A	N/A	Lateral
75	M79	Arm	3	Lbyy	N/A	N/A	Lateral
76	M80	Arm	3	Lbyy	N/A	N/A	Lateral
77	M81	Arm	5.5	Lbyy	N/A	N/A	Lateral
78	M82	Arm	5.5	Lbyy	N/A	N/A	Lateral
79	M83	Arm 2	5.5	Lbyy	N/A	N/A	Lateral
80	M84	Arm 2	5.5	Lbyy	N/A	N/A	Lateral
81	M85	Arm 2	5.5	Lbyy	N/A	N/A	Lateral
82	M86	Arm 2	5.5	Lbyy	N/A	N/A	Lateral
83	M87	Arm 2	5.5	Lbyy	N/A	N/A	Lateral
84	M88	Arm 2	5.5	Lbyy	N/A	N/A	Lateral
85	M89	Arm 2	5.5	Lbyy	N/A	N/A	Lateral
86	M90	Arm 2	5.5	Lbyy	N/A	N/A	Lateral
87	M91	Arm	5.5	Lbyy	N/A	N/A	Lateral
88	M92	Arm	5.5	Lbyy	N/A	N/A	Lateral
89	M93	Arm	3	Lbyy	N/A	N/A	Lateral
90	M94	Arm	3	Lbyy	N/A	N/A	Lateral
91	M95	Arm	5.5	Lbyy	N/A	N/A	Lateral
92	M96	Arm	5.5	Lbyy	N/A	N/A	Lateral
93	M97	Arm 2	5.5	Lbyy	N/A	N/A	Lateral
94	M98	Arm 2	5.5	Lbyy	N/A	N/A	Lateral
95	M99	Arm 2	5.5	Lbyy	N/A	N/A	Lateral
96	M100	Arm 2	5.5	Lbyy	N/A	N/A	Lateral
97	M101	Arm Vert	3	Lbyy	N/A	N/A	Lateral
98	M102	Arm Vert	3	Lbyy	N/A	N/A	Lateral

Hot Rolled Steel Design Parameters (Continued)

	Label	Shape	Length [ft]	Lcomp top [ft]	Channel Conn.	a [ft]	Function
99	M103	Arm Vert	3	Lbyy	N/A	N/A	Lateral
100	M104	Arm Vert	3	Lbyy	N/A	N/A	Lateral
101	M105	Arm Vert	3	Lbyy	N/A	N/A	Lateral
102	M106	Arm Vert	3	Lbyy	N/A	N/A	Lateral
103	M107	Arm Vert	3	Lbyy	N/A	N/A	Lateral
104	M108	Arm Vert	3	Lbyy	N/A	N/A	Lateral
105	M109	Arm Vert	3	Lbyy	N/A	N/A	Lateral
106	M110	Arm Vert	3	Lbyy	N/A	N/A	Lateral
107	M111	Arm Vert	3	Lbyy	N/A	N/A	Lateral
108	M112	Arm Vert	3	Lbyy	N/A	N/A	Lateral
109	M113	Arm Vert	3	Lbyy	N/A	N/A	Lateral
110	M114	Arm Vert	3	Lbyy	N/A	N/A	Lateral
111	M115	Arm Diagonal	6.265	Lbyy	N/A	N/A	Lateral
112	M116	Arm Diagonal	6.265	Lbyy	N/A	N/A	Lateral
113	M117	Arm Diagonal	6.265	Lbyy	N/A	N/A	Lateral
114	M118	Arm Diagonal	6.265	Lbyy	N/A	N/A	Lateral
115	M119	Arm Diagonal	6.265	Lbyy	N/A	N/A	Lateral
116	M120	Arm Diagonal	6.265	Lbyy	N/A	N/A	Lateral
117	M121	Arm Diagonal	6.265	Lbyy	N/A	N/A	Lateral
118	M122	Arm Diagonal	6.265	Lbyy	N/A	N/A	Lateral
119	M123	Arm Diagonal	6.265	Lbyy	N/A	N/A	Lateral
120	M124	Arm Diagonal	6.265	Lbyy	N/A	N/A	Lateral
121	M125	Arm Diagonal	6.265	Lbyy	N/A	N/A	Lateral
122	M126	Arm Diagonal	6.265	Lbyy	N/A	N/A	Lateral
123	M127	First Bay Brace	4.243	Lbyy	N/A	N/A	Lateral
124	M128	First Bay Brace	4.243	Lbyy	N/A	N/A	Lateral
125	M129	Arm Diagonal	4.243	Lbyy	N/A	N/A	Lateral
126	M130	Arm Diagonal	6.265	Lbyy	N/A	N/A	Lateral
127	M131	Arm Diagonal	6.265	Lbyy	N/A	N/A	Lateral
128	M132	Arm Diagonal	6.265	Lbyy	N/A	N/A	Lateral
129	M133	Arm Diagonal	6.265	Lbyy	N/A	N/A	Lateral
130	M134	Arm Diagonal	6.265	Lbyy	N/A	N/A	Lateral
131	M135	Arm Diagonal	6.265	Lbyy	N/A	N/A	Lateral
132	M136	Arm Diagonal	4.243	Lbyy	N/A	N/A	Lateral
133	M137	Arm Diagonal	6.265	Lbyy	N/A	N/A	Lateral
134	M138	Arm Diagonal	6.265	Lbyy	N/A	N/A	Lateral
135	M139	Arm Diagonal	6.265	Lbyy	N/A	N/A	Lateral
136	M140	Arm Diagonal	6.265	Lbyy	N/A	N/A	Lateral
137	M141	Arm Diagonal	6.265	Lbyy	N/A	N/A	Lateral
138	M142	Arm Diagonal	6.265	Lbyy	N/A	N/A	Lateral
139	M143	Arm Vert	3	Lbyy	N/A	N/A	Lateral
140	M144	Arm Vert	3	Lbyy	N/A	N/A	Lateral
141	M145	Arm Vert	3	Lbyy	N/A	N/A	Lateral
142	M146	Arm Vert	3	Lbyy	N/A	N/A	Lateral
143	M147	Arm Vert	3	Lbyy	N/A	N/A	Lateral
144	M148	Arm Vert	3	Lbyy	N/A	N/A	Lateral
145	M149	Arm Vert	3	Lbyy	N/A	N/A	Lateral
146	M150	Arm Vert	3	Lbyy	N/A	N/A	Lateral
147	M151	Arm Vert	3	Lbyy	N/A	N/A	Lateral
148	M152	Arm Vert	3	Lbyy	N/A	N/A	Lateral
149	M153	Arm Vert	3	Lbyy	N/A	N/A	Lateral
150	M154	Arm Vert	3	Lbyy	N/A	N/A	Lateral
151	M155	Arm Vert	3	Lbyy	N/A	N/A	Lateral
152	M156	Arm Vert	3	Lbyy	N/A	N/A	Lateral
153	M157	Arm 2	5.5	Lbyy	N/A	N/A	Lateral

Hot Rolled Steel Design Parameters (Continued)

	Label	Shape	Length [ft]	Lcomp top [ft]	Channel Conn.	a [ft]	Function
154	M158	Arm 2	5.5	Lbyy	N/A	N/A	Lateral
155	M159	Arm 2	5.5	Lbyy	N/A	N/A	Lateral
156	M160	Arm 2	5.5	Lbyy	N/A	N/A	Lateral
157	M161	Arm	5.5	Lbyy	N/A	N/A	Lateral
158	M162	Arm	5.5	Lbyy	N/A	N/A	Lateral
159	M163	Arm	3	Lbyy	N/A	N/A	Lateral
160	M164	Arm	3	Lbyy	N/A	N/A	Lateral
161	M165	Arm	5.5	Lbyy	N/A	N/A	Lateral
162	M166	Arm	5.5	Lbyy	N/A	N/A	Lateral
163	M167	Arm 2	5.5	Lbyy	N/A	N/A	Lateral
164	M168	Arm 2	5.5	Lbyy	N/A	N/A	Lateral
165	M169	Arm 2	5.5	Lbyy	N/A	N/A	Lateral
166	M170	Arm 2	5.5	Lbyy	N/A	N/A	Lateral
167	M171	Arm 2	5.5	Lbyy	N/A	N/A	Lateral
168	M172	Arm 2	5.5	Lbyy	N/A	N/A	Lateral
169	M173	Arm 2	5.5	Lbyy	N/A	N/A	Lateral
170	M174	Arm 2	5.5	Lbyy	N/A	N/A	Lateral
171	M175	Arm	5.5	Lbyy	N/A	N/A	Lateral
172	M176	Arm	5.5	Lbyy	N/A	N/A	Lateral
173	M177	Arm	3	Lbyy	N/A	N/A	Lateral
174	M178	Arm	3	Lbyy	N/A	N/A	Lateral
175	M179	Arm	5.5	Lbyy	N/A	N/A	Lateral
176	M180	Arm	5.5	Lbyy	N/A	N/A	Lateral
177	M181	Arm 2	5.5	Lbyy	N/A	N/A	Lateral
178	M182	Arm 2	5.5	Lbyy	N/A	N/A	Lateral
179	M183	Arm 2	5.5	Lbyy	N/A	N/A	Lateral
180	M184	Arm 2	5.5	Lbyy	N/A	N/A	Lateral
181	M185	Arm Vert	3	Lbyy	N/A	N/A	Lateral
182	M186	Arm Vert	3	Lbyy	N/A	N/A	Lateral
183	M187	Arm Vert	3	Lbyy	N/A	N/A	Lateral
184	M188	Arm Vert	3	Lbyy	N/A	N/A	Lateral
185	M189	Arm Vert	3	Lbyy	N/A	N/A	Lateral
186	M190	Arm Vert	3	Lbyy	N/A	N/A	Lateral
187	M191	Arm Vert	3	Lbyy	N/A	N/A	Lateral
188	M192	Arm Vert	3	Lbyy	N/A	N/A	Lateral
189	M193	Arm Vert	3	Lbyy	N/A	N/A	Lateral
190	M194	Arm Vert	3	Lbyy	N/A	N/A	Lateral
191	M195	Arm Vert	3	Lbyy	N/A	N/A	Lateral
192	M196	Arm Vert	3	Lbyy	N/A	N/A	Lateral
193	M197	Arm Vert	3	Lbyy	N/A	N/A	Lateral
194	M198	Arm Vert	3	Lbyy	N/A	N/A	Lateral
195	M199	Arm Diagonal	6.265	Lbyy	N/A	N/A	Lateral
196	M200	Arm Diagonal	6.265	Lbyy	N/A	N/A	Lateral
197	M201	Arm Diagonal	6.265	Lbyy	N/A	N/A	Lateral
198	M202	Arm Diagonal	6.265	Lbyy	N/A	N/A	Lateral
199	M203	Arm Diagonal	6.265	Lbyy	N/A	N/A	Lateral
200	M204	Arm Diagonal	6.265	Lbyy	N/A	N/A	Lateral
201	M205	Arm Diagonal	6.265	Lbyy	N/A	N/A	Lateral
202	M206	Arm Diagonal	6.265	Lbyy	N/A	N/A	Lateral
203	M207	Arm Diagonal	6.265	Lbyy	N/A	N/A	Lateral
204	M208	Arm Diagonal	6.265	Lbyy	N/A	N/A	Lateral
205	M209	Arm Diagonal	6.265	Lbyy	N/A	N/A	Lateral
206	M210	Arm Diagonal	6.265	Lbyy	N/A	N/A	Lateral
207	M211	First Bay Brace	4.243	Lbyy	N/A	N/A	Lateral
208	M212	First Bay Brace	4.243	Lbyy	N/A	N/A	Lateral

Hot Rolled Steel Design Parameters (Continued)

	Label	Shape	Length [ft]	Lcomp top [ft]	Channel Conn.	a [ft]	Function
209	M213	Arm Diagonal	4.243	Lbyy	N/A	N/A	Lateral
210	M214	Arm Diagonal	6.265	Lbyy	N/A	N/A	Lateral
211	M215	Arm Diagonal	6.265	Lbyy	N/A	N/A	Lateral
212	M216	Arm Diagonal	6.265	Lbyy	N/A	N/A	Lateral
213	M217	Arm Diagonal	6.265	Lbyy	N/A	N/A	Lateral
214	M218	Arm Diagonal	6.265	Lbyy	N/A	N/A	Lateral
215	M219	Arm Diagonal	6.265	Lbyy	N/A	N/A	Lateral
216	M220	Arm Diagonal	4.243	Lbyy	N/A	N/A	Lateral
217	M221	Arm Diagonal	6.265	Lbyy	N/A	N/A	Lateral
218	M222	Arm Diagonal	6.265	Lbyy	N/A	N/A	Lateral
219	M223	Arm Diagonal	6.265	Lbyy	N/A	N/A	Lateral
220	M224	Arm Diagonal	6.265	Lbyy	N/A	N/A	Lateral
221	M225	Arm Diagonal	6.265	Lbyy	N/A	N/A	Lateral
222	M226	Arm Diagonal	6.265	Lbyy	N/A	N/A	Lateral
223	M227	Arm Vert	3	Lbyy	N/A	N/A	Lateral
224	M228	Arm Vert	3	Lbyy	N/A	N/A	Lateral
225	M229	Arm Vert	3	Lbyy	N/A	N/A	Lateral
226	M230	Arm Vert	3	Lbyy	N/A	N/A	Lateral
227	M231	Arm Vert	3	Lbyy	N/A	N/A	Lateral
228	M232	Arm Vert	3	Lbyy	N/A	N/A	Lateral
229	M233	Arm Vert	3	Lbyy	N/A	N/A	Lateral
230	M234	Arm Vert	3	Lbyy	N/A	N/A	Lateral
231	M235	Arm Vert	3	Lbyy	N/A	N/A	Lateral
232	M236	Arm Vert	3	Lbyy	N/A	N/A	Lateral
233	M237	Arm Vert	3	Lbyy	N/A	N/A	Lateral
234	M238	Arm Vert	3	Lbyy	N/A	N/A	Lateral
235	M239	Arm Vert	3	Lbyy	N/A	N/A	Lateral
236	M240	Arm Vert	3	Lbyy	N/A	N/A	Lateral
237	M241	Cage Drive Connection	3	Lbyy	N/A	N/A	Lateral
238	M242	Cage Drive Connection	3	Lbyy	N/A	N/A	Lateral
239	M243	Cage Drive Connection	3	Lbyy	N/A	N/A	Lateral
240	M244	Cage Drive Connection	3	Lbyy	N/A	N/A	Lateral

Member Primary Data

	Label	I Node	J Node	Rotate(deg)	Section/Shape	Type	Design List	Material	Design Rule
1	M1	N5	N1	90	Cage Vert	Column	Single Angle	304 SS	Typical
2	M2	N9	N5		Cage Vert	Column	Single Angle	304 SS	Typical
3	M3	N13	N9		Cage Vert	Column	Single Angle	304 SS	Typical
4	M4	N17	N13		Cage Vert	Column	Single Angle	304 SS	Typical
5	M5	N21	N17		Cage Vert	Column	Single Angle	304 SS	Typical
6	M6	N22	N18	90	Cage Vert	Column	Single Angle	304 SS	Typical
7	M7	N18	N14	90	Cage Vert	Column	Single Angle	304 SS	Typical
8	M8	N14	N10	90	Cage Vert	Column	Single Angle	304 SS	Typical
9	M9	N10	N6	90	Cage Vert	Column	Single Angle	304 SS	Typical
10	M10	N6	N2	90	Cage Vert	Column	Single Angle	304 SS	Typical
11	M11	N23	N19	180	Cage Vert	Column	Single Angle	304 SS	Typical
12	M12	N19	N15	180	Cage Vert	Column	Single Angle	304 SS	Typical
13	M13	N15	N11	180	Cage Vert	Column	Single Angle	304 SS	Typical
14	M14	N11	N7	180	Cage Vert	Column	Single Angle	304 SS	Typical
15	M15	N7	N3	180	Cage Vert	Column	Single Angle	304 SS	Typical
16	M16	N24	N20	270	Cage Vert	Column	Single Angle	304 SS	Typical
17	M17	N20	N16	270	Cage Vert	Column	Single Angle	304 SS	Typical
18	M18	N16	N12	270	Cage Vert	Column	Single Angle	304 SS	Typical
19	M19	N12	N8	270	Cage Vert	Column	Single Angle	304 SS	Typical
20	M20	N8	N4	270	Cage Vert	Column	Single Angle	304 SS	Typical

Member Primary Data (Continued)

	Label	I Node	J Node	Rotate(deg)	Section/Shape	Type	Design List	Material	Design Rule
21	M21	N26	N17		Feedwell Support	Beam	Channel	304 SS	Typical
22	M22	N13	N16	90	Cage Horizontal	HBrace	Wide Flange	304 SS	Typical
23	M23	N20	N31		Feedwell Support	Beam	Channel	304 SS	Typical
24	M24	N18	N27		Feedwell Support	Beam	Channel	304 SS	Typical
25	M25	N15	N14	90	Cage Horizontal	HBrace	Wide Flange	304 SS	Typical
26	M26	N30	N19		Feedwell Support	Beam	Channel	304 SS	Typical
27	M27	N28	N18		Feedwell Support	Beam	Channel	304 SS	Typical
28	M28	N14	N13	90	Cage Horizontal	HBrace	Wide Flange	304 SS	Typical
29	M29	N17	N32		Feedwell Support	Beam	Channel	304 SS	Typical
30	M30	N33	N20		Feedwell Support	Beam	Channel	304 SS	Typical
31	M31	N16	N15	90	Cage Horizontal	HBrace	Wide Flange	304 SS	Typical
32	M32	N19	N29		Feedwell Support	Beam	Channel	304 SS	Typical
33	M33	N2	N1		Cage compression	Beam	Single Angle	304 SS	Typical
34	M34	N1	N4		Cage compression	Beam	Single Angle	304 SS	Typical
35	M35	N4	N3		Cage compression	Beam	Single Angle	304 SS	Typical
36	M36	N3	N2		Cage compression	Beam	Single Angle	304 SS	Typical
37	M37	N6	N5	90	Cage tension	Beam	Single Angle	304 SS	Typical
38	M38	N5	N8	90	Cage tension	Beam	Single Angle	304 SS	Typical
39	M39	N8	N7	90	Cage tension	Beam	Single Angle	304 SS	Typical
40	M40	N7	N6	90	Cage tension	Beam	Single Angle	304 SS	Typical
41	M41	N10	N9	90	Cage Horizontal	HBrace	Wide Flange	304 SS	Typical
42	M42	N9	N12	90	Cage Horizontal	HBrace	Wide Flange	304 SS	Typical
43	M43	N12	N11	90	Cage Horizontal	HBrace	Wide Flange	304 SS	Typical
44	M44	N11	N10	90	Cage Horizontal	HBrace	Wide Flange	304 SS	Typical
45	M45	N18	N17		Feedwell Support	Beam	Channel	304 SS	Typical
46	M46	N17	N20		Feedwell Support	Beam	Channel	304 SS	Typical
47	M47	N20	N19		Feedwell Support	Beam	Channel	304 SS	Typical
48	M48	N19	N18		Feedwell Support	Beam	Channel	304 SS	Typical
49	M49	N1	N6		Cage dia	VBrace	Single Angle	304 SS	Typical
50	M50	N2	N7		Cage dia	VBrace	Single Angle	304 SS	Typical
51	M51	N3	N8		Cage dia	VBrace	Single Angle	304 SS	Typical
52	M52	N4	N5		Cage dia	VBrace	Single Angle	304 SS	Typical
53	M53	N5	N10		Cage dia	VBrace	Single Angle	304 SS	Typical
54	M54	N6	N11		Cage dia	VBrace	Single Angle	304 SS	Typical
55	M55	N7	N12		Cage dia	VBrace	Single Angle	304 SS	Typical
56	M56	N8	N9		Cage dia	VBrace	Single Angle	304 SS	Typical
57	M57	N9	N14		Cage dia	VBrace	Single Angle	304 SS	Typical
58	M58	N10	N15		Cage dia	VBrace	Single Angle	304 SS	Typical
59	M59	N11	N16		Cage dia	VBrace	Single Angle	304 SS	Typical
60	M60	N12	N13		Cage dia	VBrace	Single Angle	304 SS	Typical
61	M61	N13	N18		Cage dia	VBrace	Single Angle	304 SS	Typical
62	M62	N14	N19		Cage dia	VBrace	Single Angle	304 SS	Typical
63	M63	N15	N20		Cage dia	VBrace	Single Angle	304 SS	Typical
64	M64	N16	N17		Cage dia	VBrace	Single Angle	304 SS	Typical
65	M65	N17	N22		Cage dia	VBrace	Single Angle	304 SS	Typical
66	M66	N18	N23		Cage dia	VBrace	Single Angle	304 SS	Typical
67	M67	N19	N24		Cage dia	VBrace	Single Angle	304 SS	Typical
68	M68	N20	N21		Cage dia	VBrace	Single Angle	304 SS	Typical
69	M69	N22	N25		RIGID	None	None	RIGID	Typical
70	M70	N23	N25		RIGID	None	None	RIGID	Typical
71	M71	N24	N25		RIGID	None	None	RIGID	Typical
72	M72	N21	N25		RIGID	None	None	RIGID	Typical
73	M73	N58	N54		Arm 2	Beam	Single Angle	304 SS	Typical
74	M74	N54	N50		Arm 2	Beam	Single Angle	304 SS	Typical
75	M75	N50	N46		Arm 2	Beam	Single Angle	304 SS	Typical

Member Primary Data (Continued)

	Label	I Node	J Node	Rotate(deg)	Section/Shape	Type	Design List	Material	Design Rule
76	M76	N46	N42		Arm 2	Beam	Single Angle	304 SS	Typical
77	M77	N42	N38		Arm	Beam	Single Angle	304 SS	Typical
78	M78	N38	N34		Arm	Beam	Single Angle	304 SS	Typical
79	M79	N34	N1		Arm	Beam	Single Angle	304 SS	Typical
80	M80	N4	N35		Arm	Beam	Single Angle	304 SS	Typical
81	M81	N35	N39		Arm	Beam	Single Angle	304 SS	Typical
82	M82	N39	N43		Arm	Beam	Single Angle	304 SS	Typical
83	M83	N43	N47		Arm 2	Beam	Single Angle	304 SS	Typical
84	M84	N47	N51		Arm 2	Beam	Single Angle	304 SS	Typical
85	M85	N51	N55		Arm 2	Beam	Single Angle	304 SS	Typical
86	M86	N55	N59		Arm 2	Beam	Single Angle	304 SS	Typical
87	M87	N60	N56	90	Arm 2	Beam	Single Angle	304 SS	Typical
88	M88	N56	N52	90	Arm 2	Beam	Single Angle	304 SS	Typical
89	M89	N52	N48	90	Arm 2	Beam	Single Angle	304 SS	Typical
90	M90	N48	N44	90	Arm 2	Beam	Single Angle	304 SS	Typical
91	M91	N44	N40		Arm	Beam	Single Angle	304 SS	Typical
92	M92	N40	N36	90	Arm	Beam	Single Angle	304 SS	Typical
93	M93	N36	N5	90	Arm	Beam	Single Angle	304 SS	Typical
94	M94	N8	N37	90	Arm	Beam	Single Angle	304 SS	Typical
95	M95	N37	N41	90	Arm	Beam	Single Angle	304 SS	Typical
96	M96	N41	N45	90	Arm	Beam	Single Angle	304 SS	Typical
97	M97	N45	N49	90	Arm 2	Beam	Single Angle	304 SS	Typical
98	M98	N49	N53	90	Arm 2	Beam	Single Angle	304 SS	Typical
99	M99	N53	N57	90	Arm 2	Beam	Single Angle	304 SS	Typical
100	M100	N57	N61	90	Arm 2	Beam	Single Angle	304 SS	Typical
101	M101	N34	N36	90	Arm Vert	VBrace	Wide Flange	304 SS	Typical
102	M102	N35	N37	180	Arm Vert	VBrace	Wide Flange	304 SS	Typical
103	M103	N38	N40	90	Arm Vert	VBrace	Wide Flange	304 SS	Typical
104	M104	N39	N41	180	Arm Vert	VBrace	Wide Flange	304 SS	Typical
105	M105	N42	N44	90	Arm Vert	VBrace	Wide Flange	304 SS	Typical
106	M106	N43	N45	180	Arm Vert	VBrace	Wide Flange	304 SS	Typical
107	M107	N46	N48	90	Arm Vert	VBrace	Wide Flange	304 SS	Typical
108	M108	N47	N49	180	Arm Vert	VBrace	Wide Flange	304 SS	Typical
109	M109	N50	N52	90	Arm Vert	VBrace	Wide Flange	304 SS	Typical
110	M110	N51	N53	180	Arm Vert	VBrace	Wide Flange	304 SS	Typical
111	M111	N54	N56	90	Arm Vert	VBrace	Wide Flange	304 SS	Typical
112	M112	N55	N57	180	Arm Vert	VBrace	Wide Flange	304 SS	Typical
113	M113	N58	N60	90	Arm Vert	VBrace	Wide Flange	304 SS	Typical
114	M114	N59	N61	180	Arm Vert	VBrace	Wide Flange	304 SS	Typical
115	M115	N36	N38		Arm Diagonal	VBrace	Wide Flange	304 SS	Typical
116	M116	N40	N42		Arm Diagonal	VBrace	Wide Flange	304 SS	Typical
117	M117	N44	N46		Arm Diagonal	VBrace	Wide Flange	304 SS	Typical
118	M118	N48	N50		Arm Diagonal	VBrace	Wide Flange	304 SS	Typical
119	M119	N52	N54		Arm Diagonal	VBrace	Wide Flange	304 SS	Typical
120	M120	N56	N58		Arm Diagonal	VBrace	Wide Flange	304 SS	Typical
121	M121	N59	N57		Arm Diagonal	VBrace	Wide Flange	304 SS	Typical
122	M122	N55	N53		Arm Diagonal	VBrace	Wide Flange	304 SS	Typical
123	M123	N51	N49		Arm Diagonal	VBrace	Wide Flange	304 SS	Typical
124	M124	N47	N45		Arm Diagonal	VBrace	Wide Flange	304 SS	Typical
125	M125	N43	N41		Arm Diagonal	VBrace	Wide Flange	304 SS	Typical
126	M126	N39	N37		Arm Diagonal	VBrace	Wide Flange	304 SS	Typical
127	M127	N1	N36		First Bay Brace	Beam	Single Angle	304 SS	Typical
128	M128	N37	N4		First Bay Brace	Beam	Single Angle	304 SS	Typical
129	M129	N1	N35		Arm Diagonal	VBrace	Wide Flange	304 SS	Typical
130	M130	N34	N39		Arm Diagonal	VBrace	Wide Flange	304 SS	Typical

Member Primary Data (Continued)

	Label	I Node	J Node	Rotate(deg)	Section/Shape	Type	Design List	Material	Design Rule
131	M131	N38	N43		Arm Diagonal	VBrace	Wide Flange	304 SS	Typical
132	M132	N42	N47		Arm Diagonal	VBrace	Wide Flange	304 SS	Typical
133	M133	N46	N51		Arm Diagonal	VBrace	Wide Flange	304 SS	Typical
134	M134	N50	N55		Arm Diagonal	VBrace	Wide Flange	304 SS	Typical
135	M135	N54	N59		Arm Diagonal	VBrace	Wide Flange	304 SS	Typical
136	M136	N5	N37	90	Arm Diagonal	VBrace	Wide Flange	304 SS	Typical
137	M137	N36	N41	90	Arm Diagonal	VBrace	Wide Flange	304 SS	Typical
138	M138	N40	N45	90	Arm Diagonal	VBrace	Wide Flange	304 SS	Typical
139	M139	N44	N49	90	Arm Diagonal	VBrace	Wide Flange	304 SS	Typical
140	M140	N48	N53	90	Arm Diagonal	VBrace	Wide Flange	304 SS	Typical
141	M141	N52	N57	90	Arm Diagonal	VBrace	Wide Flange	304 SS	Typical
142	M142	N56	N61	90	Arm Diagonal	VBrace	Wide Flange	304 SS	Typical
143	M143	N36	N37	90	Arm Vert	VBrace	Wide Flange	304 SS	Typical
144	M144	N40	N41	90	Arm Vert	VBrace	Wide Flange	304 SS	Typical
145	M145	N44	N45	90	Arm Vert	VBrace	Wide Flange	304 SS	Typical
146	M146	N48	N49	90	Arm Vert	VBrace	Wide Flange	304 SS	Typical
147	M147	N52	N53	90	Arm Vert	VBrace	Wide Flange	304 SS	Typical
148	M148	N56	N57	90	Arm Vert	VBrace	Wide Flange	304 SS	Typical
149	M149	N60	N61	90	Arm Vert	VBrace	Wide Flange	304 SS	Typical
150	M150	N34	N35		Arm Vert	VBrace	Wide Flange	304 SS	Typical
151	M151	N38	N39		Arm Vert	VBrace	Wide Flange	304 SS	Typical
152	M152	N42	N43		Arm Vert	VBrace	Wide Flange	304 SS	Typical
153	M153	N46	N47		Arm Vert	VBrace	Wide Flange	304 SS	Typical
154	M154	N50	N51		Arm Vert	VBrace	Wide Flange	304 SS	Typical
155	M155	N54	N55		Arm Vert	VBrace	Wide Flange	304 SS	Typical
156	M156	N58	N59		Arm Vert	VBrace	Wide Flange	304 SS	Typical
157	M157	N90	N86		Arm 2	Beam	Single Angle	304 SS	Typical
158	M158	N86	N82		Arm 2	Beam	Single Angle	304 SS	Typical
159	M159	N82	N78		Arm 2	Beam	Single Angle	304 SS	Typical
160	M160	N78	N74		Arm 2	Beam	Single Angle	304 SS	Typical
161	M161	N74	N70		Arm	Beam	Single Angle	304 SS	Typical
162	M162	N70	N66		Arm	Beam	Single Angle	304 SS	Typical
163	M163	N66	N3		Arm	Beam	Single Angle	304 SS	Typical
164	M164	N2	N67		Arm	Beam	Single Angle	304 SS	Typical
165	M165	N67	N71		Arm	Beam	Single Angle	304 SS	Typical
166	M166	N71	N75		Arm	Beam	Single Angle	304 SS	Typical
167	M167	N75	N79		Arm 2	Beam	Single Angle	304 SS	Typical
168	M168	N79	N83		Arm 2	Beam	Single Angle	304 SS	Typical
169	M169	N83	N87		Arm 2	Beam	Single Angle	304 SS	Typical
170	M170	N87	N91		Arm 2	Beam	Single Angle	304 SS	Typical
171	M171	N92	N88	90	Arm 2	Beam	Single Angle	304 SS	Typical
172	M172	N88	N84	90	Arm 2	Beam	Single Angle	304 SS	Typical
173	M173	N84	N80	90	Arm 2	Beam	Single Angle	304 SS	Typical
174	M174	N80	N76	90	Arm 2	Beam	Single Angle	304 SS	Typical
175	M175	N76	N72		Arm	Beam	Single Angle	304 SS	Typical
176	M176	N72	N68	90	Arm	Beam	Single Angle	304 SS	Typical
177	M177	N68	N7	90	Arm	Beam	Single Angle	304 SS	Typical
178	M178	N6	N69	90	Arm	Beam	Single Angle	304 SS	Typical
179	M179	N69	N73	90	Arm	Beam	Single Angle	304 SS	Typical
180	M180	N73	N77	90	Arm	Beam	Single Angle	304 SS	Typical
181	M181	N77	N81	90	Arm 2	Beam	Single Angle	304 SS	Typical
182	M182	N81	N85	90	Arm 2	Beam	Single Angle	304 SS	Typical
183	M183	N85	N89	90	Arm 2	Beam	Single Angle	304 SS	Typical
184	M184	N89	N93	90	Arm 2	Beam	Single Angle	304 SS	Typical
185	M185	N66	N68	90	Arm Vert	VBrace	Wide Flange	304 SS	Typical

Member Primary Data (Continued)

	Label	I Node	J Node	Rotate(deg)	Section/Shape	Type	Design List	Material	Design Rule
186	M186	N67	N69	180	Arm Vert	VBrace	Wide Flange	304 SS	Typical
187	M187	N70	N72	90	Arm Vert	VBrace	Wide Flange	304 SS	Typical
188	M188	N71	N73	180	Arm Vert	VBrace	Wide Flange	304 SS	Typical
189	M189	N74	N76	90	Arm Vert	VBrace	Wide Flange	304 SS	Typical
190	M190	N75	N77	180	Arm Vert	VBrace	Wide Flange	304 SS	Typical
191	M191	N78	N80	90	Arm Vert	VBrace	Wide Flange	304 SS	Typical
192	M192	N79	N81	180	Arm Vert	VBrace	Wide Flange	304 SS	Typical
193	M193	N82	N84	90	Arm Vert	VBrace	Wide Flange	304 SS	Typical
194	M194	N83	N85	180	Arm Vert	VBrace	Wide Flange	304 SS	Typical
195	M195	N86	N88	90	Arm Vert	VBrace	Wide Flange	304 SS	Typical
196	M196	N87	N89	180	Arm Vert	VBrace	Wide Flange	304 SS	Typical
197	M197	N90	N92	90	Arm Vert	VBrace	Wide Flange	304 SS	Typical
198	M198	N91	N93	180	Arm Vert	VBrace	Wide Flange	304 SS	Typical
199	M199	N68	N70		Arm Diagonal	VBrace	Wide Flange	304 SS	Typical
200	M200	N72	N74		Arm Diagonal	VBrace	Wide Flange	304 SS	Typical
201	M201	N76	N78		Arm Diagonal	VBrace	Wide Flange	304 SS	Typical
202	M202	N80	N82		Arm Diagonal	VBrace	Wide Flange	304 SS	Typical
203	M203	N84	N86		Arm Diagonal	VBrace	Wide Flange	304 SS	Typical
204	M204	N88	N90		Arm Diagonal	VBrace	Wide Flange	304 SS	Typical
205	M205	N91	N89		Arm Diagonal	VBrace	Wide Flange	304 SS	Typical
206	M206	N87	N85		Arm Diagonal	VBrace	Wide Flange	304 SS	Typical
207	M207	N83	N81		Arm Diagonal	VBrace	Wide Flange	304 SS	Typical
208	M208	N79	N77		Arm Diagonal	VBrace	Wide Flange	304 SS	Typical
209	M209	N75	N73		Arm Diagonal	VBrace	Wide Flange	304 SS	Typical
210	M210	N71	N69		Arm Diagonal	VBrace	Wide Flange	304 SS	Typical
211	M211	N3	N68		First Bay Brace	Beam	Single Angle	304 SS	Typical
212	M212	N69	N2		First Bay Brace	Beam	Single Angle	304 SS	Typical
213	M213	N3	N67		Arm Diagonal	VBrace	Wide Flange	304 SS	Typical
214	M214	N66	N71		Arm Diagonal	VBrace	Wide Flange	304 SS	Typical
215	M215	N70	N75		Arm Diagonal	VBrace	Wide Flange	304 SS	Typical
216	M216	N74	N79		Arm Diagonal	VBrace	Wide Flange	304 SS	Typical
217	M217	N78	N83		Arm Diagonal	VBrace	Wide Flange	304 SS	Typical
218	M218	N82	N87		Arm Diagonal	VBrace	Wide Flange	304 SS	Typical
219	M219	N86	N91		Arm Diagonal	VBrace	Wide Flange	304 SS	Typical
220	M220	N7	N69	90	Arm Diagonal	VBrace	Wide Flange	304 SS	Typical
221	M221	N68	N73	90	Arm Diagonal	VBrace	Wide Flange	304 SS	Typical
222	M222	N72	N77	90	Arm Diagonal	VBrace	Wide Flange	304 SS	Typical
223	M223	N76	N81	90	Arm Diagonal	VBrace	Wide Flange	304 SS	Typical
224	M224	N80	N85	90	Arm Diagonal	VBrace	Wide Flange	304 SS	Typical
225	M225	N84	N89	90	Arm Diagonal	VBrace	Wide Flange	304 SS	Typical
226	M226	N88	N93	90	Arm Diagonal	VBrace	Wide Flange	304 SS	Typical
227	M227	N68	N69	90	Arm Vert	VBrace	Wide Flange	304 SS	Typical
228	M228	N72	N73	90	Arm Vert	VBrace	Wide Flange	304 SS	Typical
229	M229	N76	N77	90	Arm Vert	VBrace	Wide Flange	304 SS	Typical
230	M230	N80	N81	90	Arm Vert	VBrace	Wide Flange	304 SS	Typical
231	M231	N84	N85	90	Arm Vert	VBrace	Wide Flange	304 SS	Typical
232	M232	N88	N89	90	Arm Vert	VBrace	Wide Flange	304 SS	Typical
233	M233	N92	N93	90	Arm Vert	VBrace	Wide Flange	304 SS	Typical
234	M234	N66	N67		Arm Vert	VBrace	Wide Flange	304 SS	Typical
235	M235	N70	N71		Arm Vert	VBrace	Wide Flange	304 SS	Typical
236	M236	N74	N75		Arm Vert	VBrace	Wide Flange	304 SS	Typical
237	M237	N78	N79		Arm Vert	VBrace	Wide Flange	304 SS	Typical
238	M238	N82	N83		Arm Vert	VBrace	Wide Flange	304 SS	Typical
239	M239	N86	N87		Arm Vert	VBrace	Wide Flange	304 SS	Typical
240	M240	N90	N91		Arm Vert	VBrace	Wide Flange	304 SS	Typical

Member Primary Data (Continued)

	Label	I Node	J Node	Rotate(deg)	Section/Shape	Type	Design List	Material	Design Rule
241	M241	N22	N21	90	Cage Drive Connection	Beam	Single Angle	304 SS	Typical
242	M242	N21	N24	90	Cage Drive Connection	Beam	Single Angle	304 SS	Typical
243	M243	N24	N23	90	Cage Drive Connection	Beam	Single Angle	304 SS	Typical
244	M244	N23	N22	90	Cage Drive Connection	Beam	Single Angle	304 SS	Typical

Member Advanced Data

	Label	Physical	Deflection Ratio Options	Seismic DR
1	M1	Yes	** NA **	None
2	M2	Yes	** NA **	None
3	M3	Yes	** NA **	None
4	M4	Yes	** NA **	None
5	M5	Yes	** NA **	None
6	M6	Yes	** NA **	None
7	M7	Yes	** NA **	None
8	M8	Yes	** NA **	None
9	M9	Yes	** NA **	None
10	M10	Yes	** NA **	None
11	M11	Yes	** NA **	None
12	M12	Yes	** NA **	None
13	M13	Yes	** NA **	None
14	M14	Yes	** NA **	None
15	M15	Yes	** NA **	None
16	M16	Yes	** NA **	None
17	M17	Yes	** NA **	None
18	M18	Yes	** NA **	None
19	M19	Yes	** NA **	None
20	M20	Yes	** NA **	None
21	M21	Yes	N/A	None
22	M22	Yes	** NA **	None
23	M23	Yes	N/A	None
24	M24	Yes	N/A	None
25	M25	Yes	** NA **	None
26	M26	Yes	N/A	None
27	M27	Yes	N/A	None
28	M28	Yes	** NA **	None
29	M29	Yes	N/A	None
30	M30	Yes	N/A	None
31	M31	Yes	** NA **	None
32	M32	Yes	N/A	None
33	M33	Yes	N/A	None
34	M34	Yes	N/A	None
35	M35	Yes	N/A	None
36	M36	Yes	N/A	None
37	M37	Yes	N/A	None
38	M38	Yes	N/A	None
39	M39	Yes	N/A	None
40	M40	Yes	N/A	None
41	M41	Yes	** NA **	None
42	M42	Yes	** NA **	None
43	M43	Yes	** NA **	None
44	M44	Yes	** NA **	None
45	M45	Yes	Default	None
46	M46	Yes	Default	None
47	M47	Yes	Default	None
48	M48	Yes	Default	None

Member Advanced Data (Continued)

	Label	Physical	Deflection Ratio Options	Seismic DR
49	M49	Yes	** NA **	None
50	M50	Yes	** NA **	None
51	M51	Yes	** NA **	None
52	M52	Yes	** NA **	None
53	M53	Yes	** NA **	None
54	M54	Yes	** NA **	None
55	M55	Yes	** NA **	None
56	M56	Yes	** NA **	None
57	M57	Yes	** NA **	None
58	M58	Yes	** NA **	None
59	M59	Yes	** NA **	None
60	M60	Yes	** NA **	None
61	M61	Yes	** NA **	None
62	M62	Yes	** NA **	None
63	M63	Yes	** NA **	None
64	M64	Yes	** NA **	None
65	M65	Yes	** NA **	None
66	M66	Yes	** NA **	None
67	M67	Yes	** NA **	None
68	M68	Yes	** NA **	None
69	M69	Yes	** NA **	None
70	M70	Yes	** NA **	None
71	M71	Yes	** NA **	None
72	M72	Yes	** NA **	None
73	M73	Yes	N/A	None
74	M74	Yes	N/A	None
75	M75	Yes	N/A	None
76	M76	Yes	N/A	None
77	M77	Yes	N/A	None
78	M78	Yes	N/A	None
79	M79	Yes	N/A	None
80	M80	Yes	N/A	None
81	M81	Yes	N/A	None
82	M82	Yes	N/A	None
83	M83	Yes	N/A	None
84	M84	Yes	N/A	None
85	M85	Yes	N/A	None
86	M86	Yes	N/A	None
87	M87	Yes	N/A	None
88	M88	Yes	N/A	None
89	M89	Yes	N/A	None
90	M90	Yes	N/A	None
91	M91	Yes	N/A	None
92	M92	Yes	N/A	None
93	M93	Yes	N/A	None
94	M94	Yes	N/A	None
95	M95	Yes	N/A	None
96	M96	Yes	N/A	None
97	M97	Yes	N/A	None
98	M98	Yes	N/A	None
99	M99	Yes	N/A	None
100	M100	Yes	N/A	None
101	M101	Yes	** NA **	None
102	M102	Yes	** NA **	None
103	M103	Yes	** NA **	None

Member Advanced Data (Continued)

	Label	Physical	Deflection Ratio Options	Seismic DR
104	M104	Yes	** NA **	None
105	M105	Yes	** NA **	None
106	M106	Yes	** NA **	None
107	M107	Yes	** NA **	None
108	M108	Yes	** NA **	None
109	M109	Yes	** NA **	None
110	M110	Yes	** NA **	None
111	M111	Yes	** NA **	None
112	M112	Yes	** NA **	None
113	M113	Yes	** NA **	None
114	M114	Yes	** NA **	None
115	M115	Yes	** NA **	None
116	M116	Yes	** NA **	None
117	M117	Yes	** NA **	None
118	M118	Yes	** NA **	None
119	M119	Yes	** NA **	None
120	M120	Yes	** NA **	None
121	M121	Yes	** NA **	None
122	M122	Yes	** NA **	None
123	M123	Yes	** NA **	None
124	M124	Yes	** NA **	None
125	M125	Yes	** NA **	None
126	M126	Yes	** NA **	None
127	M127	Yes	N/A	None
128	M128	Yes	N/A	None
129	M129	Yes	** NA **	None
130	M130	Yes	** NA **	None
131	M131	Yes	** NA **	None
132	M132	Yes	** NA **	None
133	M133	Yes	** NA **	None
134	M134	Yes	** NA **	None
135	M135	Yes	** NA **	None
136	M136	Yes	** NA **	None
137	M137	Yes	** NA **	None
138	M138	Yes	** NA **	None
139	M139	Yes	** NA **	None
140	M140	Yes	** NA **	None
141	M141	Yes	** NA **	None
142	M142	Yes	** NA **	None
143	M143	Yes	** NA **	None
144	M144	Yes	** NA **	None
145	M145	Yes	** NA **	None
146	M146	Yes	** NA **	None
147	M147	Yes	** NA **	None
148	M148	Yes	** NA **	None
149	M149	Yes	** NA **	None
150	M150	Yes	** NA **	None
151	M151	Yes	** NA **	None
152	M152	Yes	** NA **	None
153	M153	Yes	** NA **	None
154	M154	Yes	** NA **	None
155	M155	Yes	** NA **	None
156	M156	Yes	** NA **	None
157	M157	Yes	N/A	None
158	M158	Yes	N/A	None

Member Advanced Data (Continued)

	Label	Physical	Deflection Ratio Options	Seismic DR
159	M159	Yes	N/A	None
160	M160	Yes	N/A	None
161	M161	Yes	N/A	None
162	M162	Yes	N/A	None
163	M163	Yes	N/A	None
164	M164	Yes	N/A	None
165	M165	Yes	N/A	None
166	M166	Yes	N/A	None
167	M167	Yes	N/A	None
168	M168	Yes	N/A	None
169	M169	Yes	N/A	None
170	M170	Yes	N/A	None
171	M171	Yes	N/A	None
172	M172	Yes	N/A	None
173	M173	Yes	N/A	None
174	M174	Yes	N/A	None
175	M175	Yes	N/A	None
176	M176	Yes	N/A	None
177	M177	Yes	N/A	None
178	M178	Yes	N/A	None
179	M179	Yes	N/A	None
180	M180	Yes	N/A	None
181	M181	Yes	N/A	None
182	M182	Yes	N/A	None
183	M183	Yes	N/A	None
184	M184	Yes	N/A	None
185	M185	Yes	** NA **	None
186	M186	Yes	** NA **	None
187	M187	Yes	** NA **	None
188	M188	Yes	** NA **	None
189	M189	Yes	** NA **	None
190	M190	Yes	** NA **	None
191	M191	Yes	** NA **	None
192	M192	Yes	** NA **	None
193	M193	Yes	** NA **	None
194	M194	Yes	** NA **	None
195	M195	Yes	** NA **	None
196	M196	Yes	** NA **	None
197	M197	Yes	** NA **	None
198	M198	Yes	** NA **	None
199	M199	Yes	** NA **	None
200	M200	Yes	** NA **	None
201	M201	Yes	** NA **	None
202	M202	Yes	** NA **	None
203	M203	Yes	** NA **	None
204	M204	Yes	** NA **	None
205	M205	Yes	** NA **	None
206	M206	Yes	** NA **	None
207	M207	Yes	** NA **	None
208	M208	Yes	** NA **	None
209	M209	Yes	** NA **	None
210	M210	Yes	** NA **	None
211	M211	Yes	N/A	None
212	M212	Yes	N/A	None
213	M213	Yes	** NA **	None

Member Advanced Data (Continued)

	Label	Physical	Deflection Ratio Options	Seismic DR
214	M214	Yes	** NA **	None
215	M215	Yes	** NA **	None
216	M216	Yes	** NA **	None
217	M217	Yes	** NA **	None
218	M218	Yes	** NA **	None
219	M219	Yes	** NA **	None
220	M220	Yes	** NA **	None
221	M221	Yes	** NA **	None
222	M222	Yes	** NA **	None
223	M223	Yes	** NA **	None
224	M224	Yes	** NA **	None
225	M225	Yes	** NA **	None
226	M226	Yes	** NA **	None
227	M227	Yes	** NA **	None
228	M228	Yes	** NA **	None
229	M229	Yes	** NA **	None
230	M230	Yes	** NA **	None
231	M231	Yes	** NA **	None
232	M232	Yes	** NA **	None
233	M233	Yes	** NA **	None
234	M234	Yes	** NA **	None
235	M235	Yes	** NA **	None
236	M236	Yes	** NA **	None
237	M237	Yes	** NA **	None
238	M238	Yes	** NA **	None
239	M239	Yes	** NA **	None
240	M240	Yes	** NA **	None
241	M241	Yes	Default	None
242	M242	Yes	Default	None
243	M243	Yes	Default	None
244	M244	Yes	Default	None

Hot Rolled Steel Section Sets

	Label	Shape	Type	Design List	Material	Design Rule	Area [in²]	Iyy [in⁴]	Izz [in⁴]	J [in⁴]
1	Cage Vert	L3X3X4	Column	Single Angle	304 SS	Typical	1.44	1.23	1.23	0.031
2	Cage Horizontal	L2X2X4	HBrace	Wide Flange	304 SS	Typical	0.944	0.346	0.346	0.021
3	Cage dia	L2X2X4	VBrace	Single Angle	304 SS	Typical	0.944	0.346	0.346	0.021
4	Cage compression	L4X4X8	Beam	Single Angle	304 SS	Typical	3.75	5.52	5.52	0.322
5	Cage tension	L4X4X8	Beam	Single Angle	304 SS	Typical	3.75	5.52	5.52	0.322
6	Feedwell Support	C8X11.5	Beam	Channel	304 SS	Typical	3.37	1.31	32.5	0.13
7	Arm	L3X3X4	Beam	Single Angle	304 SS	Typical	1.44	1.23	1.23	0.031
8	Arm Vert	L2X2X4	VBrace	Wide Flange	304 SS	Typical	0.944	0.346	0.346	0.021
9	Arm Diagonal	L2X2X4	VBrace	Wide Flange	304 SS	Typical	0.944	0.346	0.346	0.021
10	First Bay Brace	L3X3X4	Beam	Single Angle	304 SS	Typical	1.44	1.23	1.23	0.031
11	Brace Frame	L3X3X4	Beam	Single Angle	304 SS	Typical	1.44	1.23	1.23	0.031
12	Rake Blade	RAKEBLADE7.5X2.5X.25	Beam	Single Angle	304 SS	Typical	2.438	0.923	14.478	0.049
13	Arm 2	L2.5X2.5X4	Beam	Single Angle	304 SS	Typical	1.19	0.692	0.692	0.026
14	Cage Drive Connection	L5X5X6	Beam	Single Angle	304 SS	Typical	3.65	8.76	8.76	0.183

Node Coordinates

	Label	X [ft]	Y [ft]	Z [ft]	Detach From Diaphragm
1	N1	1.5	3	1.5	
2	N2	-1.5	3	1.5	

Node Coordinates (Continued)

	Label	X [ft]	Y [ft]	Z [ft]	Detach From Diaphragm
3	N3	-1.5	3	-1.5	
4	N4	1.5	3	-1.5	
5	N5	1.5	6	1.5	
6	N6	-1.5	6	1.5	
7	N7	-1.5	6	-1.5	
8	N8	1.5	6	-1.5	
9	N9	1.5	8.333	1.5	
10	N10	-1.5	8.333	1.5	
11	N11	-1.5	8.333	-1.5	
12	N12	1.5	8.333	-1.5	
13	N13	1.5	10.666	1.5	
14	N14	-1.5	10.666	1.5	
15	N15	-1.5	10.666	-1.5	
16	N16	1.5	10.666	-1.5	
17	N17	1.5	13.499	1.5	
18	N18	-1.5	13.499	1.5	
19	N19	-1.5	13.499	-1.5	
20	N20	1.5	13.499	-1.5	
21	N21	1.5	15.832	1.5	
22	N22	-1.5	15.832	1.5	
23	N23	-1.5	15.832	-1.5	
24	N24	1.5	15.832	-1.5	
25	N25	0	15.832	0	
26	N26	1.5	13.499	8.25	
27	N27	-1.5	13.499	8.25	
28	N28	-8.25	13.499	1.5	
29	N29	-8.25	13.499	-1.5	
30	N30	-1.5	13.499	-8.25	
31	N31	1.5	13.499	-8.25	
32	N32	8.25	13.499	1.5	
33	N33	8.25	13.499	-1.5	
34	N34	4.5	3	1.5	
35	N35	4.5	3	-1.5	
36	N36	4.5	6	1.5	
37	N37	4.5	6	-1.5	
38	N38	10	3	1.5	
39	N39	10	3	-1.5	
40	N40	10	6	1.5	
41	N41	10	6	-1.5	
42	N42	15.5	3	1.5	
43	N43	15.5	3	-1.5	
44	N44	15.5	6	1.5	
45	N45	15.5	6	-1.5	
46	N46	21	3	1.5	
47	N47	21	3	-1.5	
48	N48	21	6	1.5	
49	N49	21	6	-1.5	
50	N50	26.5	3	1.5	
51	N51	26.5	3	-1.5	
52	N52	26.5	6	1.5	
53	N53	26.5	6	-1.5	
54	N54	32	3	1.5	
55	N55	32	3	-1.5	
56	N56	32	6	1.5	
57	N57	32	6	-1.5	

Node Coordinates (Continued)

	Label	X [ft]	Y [ft]	Z [ft]	Detach From Diaphragm
58	N58	37.5	3	1.5	
59	N59	37.5	3	-1.5	
60	N60	37.5	6	1.5	
61	N61	37.5	6	-1.5	
62	N66	-4.5	3	-1.5	
63	N67	-4.5	3	1.5	
64	N68	-4.5	6	-1.5	
65	N69	-4.5	6	1.5	
66	N70	-10	3	-1.5	
67	N71	-10	3	1.5	
68	N72	-10	6	-1.5	
69	N73	-10	6	1.5	
70	N74	-15.5	3	-1.5	
71	N75	-15.5	3	1.5	
72	N76	-15.5	6	-1.5	
73	N77	-15.5	6	1.5	
74	N78	-21	3	-1.5	
75	N79	-21	3	1.5	
76	N80	-21	6	-1.5	
77	N81	-21	6	1.5	
78	N82	-26.5	3	-1.5	
79	N83	-26.5	3	1.5	
80	N84	-26.5	6	-1.5	
81	N85	-26.5	6	1.5	
82	N86	-32	3	-1.5	
83	N87	-32	3	1.5	
84	N88	-32	6	-1.5	
85	N89	-32	6	1.5	
86	N90	-37.5	3	-1.5	
87	N91	-37.5	3	1.5	
88	N92	-37.5	6	-1.5	
89	N93	-37.5	6	1.5	

Node Boundary Conditions

	Node Label	X [lb/in]	Y [lb/in]	Z [lb/in]	X Rot [k-ft/rad]	Y Rot [k-ft/rad]	Z Rot [k-ft/rad]
1	N25	Reaction	Reaction	Reaction	Reaction	Reaction	Reaction

Node Loads and Enforced Displacements (BLC 1 : DL)

	Node Label	L, D, M	Direction	Magnitude [(lb, lb-ft), (in, rad), (lb*s²/ft, lb*s²*ft)]
1	N26	L	Y	-475
2	N27	L	Y	-475
3	N28	L	Y	-475
4	N29	L	Y	-475
5	N30	L	Y	-475
6	N31	L	Y	-475
7	N32	L	Y	-475
8	N33	L	Y	-475
9	N91	L	Y	-385
10	N90	L	Y	-385
11	N44	L	Y	-125
12	N45	L	Y	-125
13	N52	L	Y	-125
14	N53	L	Y	-125

Node Loads and Enforced Displacements (BLC 1 : DL) (Continued)

	Node Label	L, D, M	Direction	Magnitude [(lb, lb-ft), (in, rad), (lb*s²/ft, lb*s²*ft)]
15	N56	L	Y	-125
16	N57	L	Y	-125
17	N60	L	Y	-125
18	N61	L	Y	-125
19	N2	L	Y	-500
20	N1	L	Y	-500
21	N36	L	Y	-500
22	N5	L	Y	-500

Node Loads and Enforced Displacements (BLC 2 : LL)

	Node Label	L, D, M	Direction	Magnitude [(lb, lb-ft), (in, rad), (lb*s²/ft, lb*s²*ft)]
1	N34	L	Z	-53
2	N38	L	Z	-53
3	N42	L	Z	-53
4	N46	L	Z	-53
5	N50	L	Z	-53
6	N54	L	Z	-53
7	N58	L	Z	-53
8	N66	L	Z	53
9	N70	L	Z	53
10	N74	L	Z	53
11	N78	L	Z	53
12	N82	L	Z	53
13	N86	L	Z	53
14	N90	L	Z	53

Node Loads and Enforced Displacements (BLC 3 : EL)

	Node Label	L, D, M	Direction	Magnitude [(lb, lb-ft), (in, rad), (lb*s²/ft, lb*s²*ft)]
1	N1	L	Y	-352
2	N2	L	Y	-352
3	N3	L	Y	-352
4	N4	L	Y	-352
5	N1	L	Z	-1760
6	N2	L	Z	-1760

Basic Load Cases

	BLC Description	Category	Y Gravity	Nodal
1	DL	DL	-1	22
2	LL	LL		14
3	EL	EL		6

Load Combinations

	Description	Solve	P-Delta	BLC	Factor	BLC	Factor	BLC	Factor
1	Allowable Cases								
2	(1) DL	Yes	Y	DL	1				
3	(2) DL + LL	Yes	Y	DL	1	LL	1		
4	(3) DL + LL (Ultimate)	Yes	Y	DL	1	LL	2		
5	(8) DL + .7 EL	Yes	Y	DL	1	EL	0.7		
6	(9) DL + .75 LL + .75(.7 EL)	Yes	Y	DL	1	EL	0.525	LL	0.75
7	(10) .6 DL - .7 EL	Yes	Y	DL	0.6	EL	-0.7		

Load Combinations (Continued)

	Description	Solve	P-Delta	BLC	Factor	BLC	Factor	BLC	Factor
8	LL (Ultimate)		Y	2	2				

Load Combination Design

	Description	Service	Hot Rolled	Cold Formed	Wood	Concrete	Masonry	Aluminum	Stainless	Connection
1	Allowable Cases		Yes	Yes	Yes	Yes	Yes	Yes	Yes	Yes
2	(1) DL		Yes	Yes	Yes	Yes	Yes	Yes	Yes	Yes
3	(2) DL + LL		Yes	Yes	Yes	Yes	Yes	Yes	Yes	Yes
4	(3) DL + LL (Ultimate)		Yes	Yes	Yes	Yes	Yes	Yes	Yes	Yes
5	(8) DL + .7 EL		Yes	Yes	Yes	Yes	Yes	Yes	Yes	Yes
6	(9) DL + .75 LL + .75(.7 EL)		Yes	Yes	Yes	Yes	Yes	Yes	Yes	Yes
7	(10) .6 DL - .7 EL		Yes	Yes	Yes	Yes	Yes	Yes	Yes	Yes
8	LL (Ultimate)		Yes	Yes	Yes	Yes	Yes	Yes	Yes	Yes

Envelope Node Reactions

	Node Label		X [lb]	LC	Y [lb]	LC	Z [lb]	LC	MX [lb-ft]	LC	MY [lb-ft]	LC	MZ [lb-ft]	LC
1	N25	max	0	5	13341.456	5	2464	5	29776.829	7	4.442	5	2037.332	4
2		min	0	4	6427.913	7	-2464	7	-34531.715	5	-31184.887	4	1204.465	7
3	Totals:	max	0	5	13341.456	5	2464	5						
4		min	0	4	6427.913	7	-2464	7						

Envelope Node Displacements

	Node Label		X [in]	LC	Y [in]	LC	Z [in]	LC	X Rotation [rad]	LC	Y Rotation [rad]	LC	Z Rotation [rad]	LC
1	N1	max	0.105	4	0.003	7	0.096	7	8.093e-4	5	5.649e-3	4	-1.694e-4	5
2		min	-0.022	5	-0.025	5	-0.107	6	-6.514e-4	7	-5.035e-4	5	-6.985e-4	4
3	N2	max	0.108	4	0.01	7	0.088	7	8.534e-4	5	5.597e-3	4	1.069e-4	5
4		min	-0.018	5	-0.025	5	-0.114	5	-6.408e-4	7	-5.523e-4	5	-4.467e-4	4
5	N3	max	0.005	5	0.009	4	0.088	7	8.586e-4	5	5.621e-3	4	5.002e-4	4
6		min	-0.121	4	-0.013	7	-0.114	5	-6.193e-4	7	-4.919e-4	5	-6.66e-5	7
7	N4	max	0.002	5	0.008	6	0.096	7	8.06e-4	6	5.597e-3	4	2.936e-4	4
8		min	-0.125	4	-0.018	7	-0.107	6	-6.523e-4	7	-6.166e-4	5	-2.014e-4	7
9	N5	max	0.11	4	0.004	4	0.068	7	7.642e-4	5	5.313e-3	4	5.004e-4	4
10		min	-0.014	5	-0.021	5	-0.079	4	-6.378e-4	7	-4.839e-4	5	-2.415e-4	2
11	N6	max	0.108	4	0.009	7	0.068	4	8.209e-4	5	5.352e-3	4	7.435e-4	4
12		min	-0.018	5	-0.021	5	-0.079	5	-6.412e-4	7	-4.242e-4	5	-1.174e-4	7
13	N7	max	0.002	7	0.01	4	0.069	4	8.065e-4	5	5.327e-3	4	2.013e-4	5
14		min	-0.121	4	-0.012	7	-0.08	5	-6.108e-4	7	-5.323e-4	5	-7.614e-4	4
15	N8	max	0.004	7	0.008	6	0.068	7	7.744e-4	5	5.369e-3	4	9.573e-6	5
16		min	-0.118	4	-0.016	7	-0.078	4	-6.502e-4	7	-3.768e-4	5	-8.587e-4	4
17	N9	max	0.08	4	0.004	4	0.048	7	7.887e-4	6	4.663e-3	4	1.252e-3	4
18		min	-0.012	5	-0.018	5	-0.062	4	-7.104e-4	7	-2.808e-4	2	-7.75e-5	7
19	N10	max	0.09	4	0.008	7	0.05	4	9.003e-4	5	4.385e-3	4	9.53e-4	4
20		min	-0.012	5	-0.018	5	-0.053	5	-6.773e-4	7	-3.732e-4	5	-1.628e-4	5
21	N11	max	0.004	7	0.009	4	0.057	4	8.395e-4	5	4.669e-3	4	-1.094e-5	5
22		min	-0.087	4	-0.01	7	-0.055	5	-6.759e-4	7	-4.042e-4	5	-1.356e-3	4
23	N12	max	0.004	7	0.006	6	0.046	7	8.481e-4	6	4.398e-3	4	3.864e-5	5
24		min	-0.096	4	-0.014	7	-0.056	4	-7.53e-4	7	-2.854e-4	2	-1.077e-3	4
25	N13	max	0.048	4	0.004	7	0.028	7	5.508e-4	6	3.286e-3	4	1.361e-3	4
26		min	-0.009	5	-0.013	5	-0.041	4	-7.352e-4	7	-1.861e-4	7	1.486e-5	5
27	N14	max	0.058	4	0.006	7	0.031	4	6.139e-4	5	2.848e-3	4	1.039e-3	4
28		min	-0.009	5	-0.014	5	-0.03	5	-8.503e-4	4	-2.891e-4	5	-2.606e-4	5
29	N15	max	0.005	7	0.007	4	0.038	4	8.95e-4	5	3.306e-3	4	-7.539e-5	7
30		min	-0.052	4	-0.008	7	-0.032	5	-4.96e-4	7	-2.88e-4	5	-1.462e-3	4

Envelope Node Displacements (Continued)

	Node Label		X [in]	LC	Y [in]	LC	Z [in]	LC	X Rotation [rad]	LC	Y Rotation [rad]	LC	Z Rotation [rad]	LC
31	N16	max	0.005	7	0.004	6	0.026	7	9.339e-4	4	2.849e-3	4	1.145e-4	7
32		min	-0.061	4	-0.011	7	-0.033	4	-5.556e-4	7	-1.972e-4	2	-1.136e-3	4
33	N17	max	0.017	4	0.002	7	0.009	7	1.147e-3	5	8.729e-4	4	-5.834e-4	7
34		min	-0.005	5	-0.007	5	-0.015	4	3.221e-4	7	-1.46e-4	2	-9.317e-4	2
35	N18	max	0.02	4	0.003	7	0.012	4	1.189e-3	5	7.977e-4	4	1.072e-3	4
36		min	-0.005	5	-0.007	5	-0.009	5	3.25e-4	7	-1.522e-4	2	5.401e-4	7
37	N19	max	0.003	7	0.002	4	0.014	4	-6.459e-4	5	8.718e-4	4	9.235e-4	5
38		min	-0.018	4	-0.004	7	-0.01	5	-9.018e-4	4	-1.786e-4	5	5.121e-4	7
39	N20	max	0.003	7	0.002	5	0.008	7	-6.589e-4	5	7.987e-4	4	-5.495e-4	7
40		min	-0.021	4	-0.006	7	-0.013	4	-8.996e-4	2	-1.766e-4	5	-1.104e-3	4
41	N21	max	0	4	0	7	0	7	0	5	0	4	0	7
42		min	0	7	0	5	0	4	0	7	0	7	0	5
43	N22	max	0	4	0	7	0	4	0	5	0	4	0	6
44		min	0	5	0	5	0	5	0	7	0	5	0	7
45	N23	max	0	5	0	5	0	4	0	5	0	4	0	7
46		min	0	4	0	7	0	5	0	7	0	5	0	6
47	N24	max	0	7	0	5	0	7	0	5	0	4	0	5
48		min	0	4	0	7	0	4	0	7	0	7	0	4
49	N25	max	0	4	0	7	0	7	0	5	0	4	0	7
50		min	0	5	0	5	0	5	0	7	0	5	0	4
51	N26	max	0.088	4	-0.097	7	0.009	7	3.328e-3	5	8.729e-4	4	-5.834e-4	7
52		min	-0.015	5	-0.221	5	-0.015	4	1.631e-3	7	-1.46e-4	2	-9.317e-4	2
53	N27	max	0.085	4	-0.096	7	0.012	4	3.37e-3	5	7.977e-4	4	1.072e-3	4
54		min	-0.016	5	-0.225	5	-0.009	5	1.634e-3	7	-1.522e-4	2	5.401e-4	7
55	N28	max	0.02	4	-0.114	7	0.077	4	1.189e-3	5	7.977e-4	4	3.253e-3	4
56		min	-0.005	5	-0.209	4	-0.021	5	3.25e-4	7	-1.522e-4	2	1.849e-3	7
57	N29	max	0.003	7	-0.119	7	0.085	4	-6.459e-4	5	8.718e-4	4	3.104e-3	5
58		min	-0.018	4	-0.196	2	-0.024	5	-9.018e-4	4	-1.786e-4	5	1.821e-3	7
59	N30	max	0.013	5	-0.138	7	0.014	4	-2.064e-3	7	8.718e-4	4	9.235e-4	5
60		min	-0.089	4	-0.194	2	-0.01	5	-3.083e-3	4	-1.786e-4	5	5.121e-4	7
61	N31	max	0.013	2	-0.142	7	0.008	7	-2.09e-3	7	7.987e-4	4	-5.495e-4	7
62		min	-0.086	4	-0.196	2	-0.013	4	-3.081e-3	2	-1.766e-4	5	-1.104e-3	4
63	N32	max	0.017	4	-0.118	7	0.017	7	1.147e-3	5	8.729e-4	4	-1.892e-3	7
64		min	-0.005	5	-0.202	5	-0.085	4	3.221e-4	7	-1.46e-4	2	-3.113e-3	2
65	N33	max	0.003	7	-0.123	7	0.014	2	-6.589e-4	5	7.987e-4	4	-1.858e-3	7
66		min	-0.021	4	-0.211	4	-0.077	4	-8.996e-4	2	-1.766e-4	5	-3.285e-3	4
67	N34	max	0.098	4	-0.017	7	0.103	7	1.139e-3	5	6.941e-3	4	-7.477e-4	7
68		min	-0.03	5	-0.048	5	-0.333	4	-4.904e-4	7	-3.942e-4	5	-1.093e-3	2
69	N35	max	-0.005	7	-0.004	6	0.103	7	9.825e-4	5	6.987e-3	4	-4.832e-4	7
70		min	-0.134	4	-0.03	7	-0.332	4	-5.664e-4	7	-3.771e-4	5	-8.019e-4	4
71	N36	max	0.123	4	-0.017	7	0.08	7	9.565e-4	5	6.518e-3	4	-7.154e-4	7
72		min	-0.004	5	-0.048	5	-0.303	4	-6.791e-4	7	-6.681e-4	5	-1.062e-3	2
73	N37	max	0.012	2	-0.004	6	0.08	7	1.103e-3	5	6.62e-3	4	-5.341e-4	7
74		min	-0.113	4	-0.03	7	-0.303	4	-5.525e-4	7	-5.959e-4	5	-6.863e-4	2
75	N38	max	0.084	4	-0.081	7	0.108	7	1.691e-3	5	6.896e-3	4	-1.141e-3	7
76		min	-0.045	5	-0.139	5	-0.794	4	-1.713e-4	7	-3.146e-4	5	-1.744e-3	2
77	N39	max	-0.014	7	-0.078	5	0.108	7	1.654e-3	5	6.785e-3	4	-9.25e-4	7
78		min	-0.151	4	-0.101	2	-0.794	4	-1.913e-4	7	-4.361e-4	5	-1.47e-3	4
79	N40	max	0.138	4	-0.082	7	0.102	7	1.804e-3	5	6.819e-3	4	-1.192e-3	7
80		min	0.007	5	-0.141	5	-0.731	4	-1.038e-4	7	-4.947e-4	5	-1.823e-3	2
81	N41	max	0.023	2	-0.08	5	0.103	7	1.713e-3	5	6.718e-3	4	-9.919e-4	7
82		min	-0.107	4	-0.103	2	-0.73	4	-1.522e-4	7	-5.291e-4	5	-1.579e-3	4
83	N42	max	0.075	4	-0.168	7	0.117	7	2.157e-3	5	6.911e-3	4	-1.393e-3	7
84		min	-0.055	5	-0.273	2	-1.254	4	1.069e-4	7	-3.939e-4	5	-2.164e-3	2
85	N43	max	-0.021	7	-0.163	7	0.117	7	2.153e-3	5	6.826e-3	4	-1.216e-3	7

Envelope Node Displacements (Continued)

	Node Label		X [in]	LC	Y [in]	LC	Z [in]	LC	X Rotation [rad]	LC	Y Rotation [rad]	LC	Z Rotation [rad]	LC
86		min	-0.164	4	-0.221	2	-1.254	4	1.08e-4	7	-5.02e-4	5	-1.923e-3	4
87	N44	max	0.147	4	-0.169	7	0.122	7	2.203e-3	5	6.881e-3	4	-1.403e-3	7
88		min	0.013	5	-0.274	2	-1.174	4	1.357e-4	7	-5.758e-4	5	-2.18e-3	2
89	N45	max	0.031	2	-0.164	7	0.122	7	2.196e-3	5	6.928e-3	4	-1.262e-3	7
90		min	-0.102	4	-0.222	2	-1.174	4	1.344e-4	7	-4.889e-4	5	-1.98e-3	4
91	N46	max	0.067	4	-0.27	7	0.127	7	2.515e-3	5	6.931e-3	4	-1.585e-3	7
92		min	-0.063	5	-0.432	2	-1.717	4	3.217e-4	7	-4.265e-4	5	-2.482e-3	2
93	N47	max	-0.026	7	-0.258	7	0.127	7	2.552e-3	5	6.84e-3	4	-1.447e-3	7
94		min	-0.176	4	-0.368	2	-1.717	4	3.455e-4	7	-5.371e-4	5	-2.312e-3	4
95	N48	max	0.153	4	-0.27	7	0.141	7	2.597e-3	5	7.024e-3	4	-1.64e-3	7
96		min	0.018	7	-0.433	2	-1.625	4	3.718e-4	7	-4.968e-4	5	-2.593e-3	4
97	N49	max	0.037	2	-0.259	7	0.141	7	2.56e-3	5	7.029e-3	4	-1.511e-3	7
98		min	-0.098	4	-0.369	2	-1.625	4	3.514e-4	7	-4.718e-4	5	-2.399e-3	4
99	N50	max	0.063	4	-0.381	7	0.139	7	2.723e-3	5	6.946e-3	4	-1.685e-3	7
100		min	-0.068	5	-0.607	2	-2.179	4	4.46e-4	7	-4.636e-4	5	-2.653e-3	4
101	N51	max	-0.03	7	-0.365	7	0.139	7	2.781e-3	5	6.868e-3	4	-1.592e-3	7
102		min	-0.183	4	-0.535	2	-2.179	4	4.813e-4	7	-5.561e-4	5	-2.531e-3	4
103	N52	max	0.156	4	-0.382	7	0.169	2	2.788e-3	5	7.047e-3	4	-1.726e-3	7
104		min	0.019	7	-0.608	2	-2.083	4	4.855e-4	7	-4.886e-4	5	-2.736e-3	4
105	N53	max	0.04	2	-0.365	7	0.169	2	2.771e-3	5	7.049e-3	4	-1.636e-3	7
106		min	-0.096	4	-0.536	2	-2.083	4	4.763e-4	7	-4.695e-4	5	-2.593e-3	4
107	N54	max	0.06	4	-0.495	7	0.154	7	2.812e-3	5	6.932e-3	4	-1.712e-3	7
108		min	-0.07	5	-0.787	2	-2.639	4	4.987e-4	7	-4.964e-4	5	-2.709e-3	4
109	N55	max	-0.032	7	-0.476	7	0.154	7	2.896e-3	5	6.869e-3	4	-1.633e-3	7
110		min	-0.187	4	-0.71	2	-2.638	4	5.492e-4	7	-5.716e-4	5	-2.591e-3	4
111	N56	max	0.157	4	-0.496	7	0.199	2	2.855e-3	5	7.039e-3	4	-1.762e-3	7
112		min	0.019	7	-0.788	2	-2.544	4	5.258e-4	7	-4.81e-4	5	-2.803e-3	4
113	N57	max	0.041	2	-0.476	7	0.199	2	2.864e-3	5	7.024e-3	4	-1.686e-3	7
114		min	-0.095	4	-0.71	2	-2.544	4	5.31e-4	7	-4.879e-4	5	-2.666e-3	4
115	N58	max	0.06	4	-0.609	7	0.17	7	2.785e-3	5	6.973e-3	4	-1.647e-3	7
116		min	-0.071	5	-0.966	2	-3.096	4	4.828e-4	7	-4.546e-4	5	-2.589e-3	4
117	N59	max	-0.032	7	-0.587	7	0.17	7	2.982e-3	5	6.834e-3	4	-1.557e-3	7
118		min	-0.188	4	-0.884	2	-3.095	4	6.004e-4	7	-5.934e-4	5	-2.465e-3	4
119	N60	max	0.157	4	-0.609	7	0.229	2	2.812e-3	5	6.933e-3	4	-1.66e-3	7
120		min	0.019	7	-0.966	2	-3.005	4	4.986e-4	7	-5.727e-4	5	-2.62e-3	4
121	N61	max	0.041	2	-0.587	7	0.229	2	2.975e-3	5	7.074e-3	4	-1.558e-3	7
122		min	-0.095	4	-0.884	2	-3.005	4	5.963e-4	7	-4.264e-4	5	-2.461e-3	4
123	N66	max	0.014	5	-0.008	4	0.316	4	6.057e-4	5	6.937e-3	4	9.745e-4	5
124		min	-0.114	4	-0.025	2	-0.13	5	-8.172e-4	7	-3.782e-4	5	4.459e-4	7
125	N67	max	0.118	4	0.008	7	0.315	4	6.978e-4	5	6.988e-3	4	6.304e-4	4
126		min	-0.01	5	-0.037	5	-0.13	5	-7.434e-4	7	-3.794e-4	5	2.02e-4	7
127	N68	max	-0.004	7	-0.008	4	0.294	4	8.531e-4	5	6.52e-3	4	9.208e-4	5
128		min	-0.134	4	-0.025	2	-0.103	5	-7.525e-4	7	-6.759e-4	5	4.302e-4	7
129	N69	max	0.102	4	0.008	7	0.293	4	6.407e-4	5	6.618e-3	4	6.307e-4	5
130		min	-0.027	5	-0.037	5	-0.103	5	-8.38e-4	7	-6.16e-4	5	1.756e-4	7
131	N70	max	0.029	5	-0.066	7	0.777	4	7.698e-6	5	6.886e-3	4	1.72e-3	5
132		min	-0.099	4	-0.113	5	-0.146	5	-1.183e-3	7	-3.036e-4	5	8.766e-4	7
133	N71	max	0.135	4	-0.025	7	0.777	4	2.585e-5	5	6.777e-3	4	1.336e-3	6
134		min	0.004	7	-0.111	5	-0.146	5	-1.17e-3	7	-4.248e-4	5	6.424e-4	7
135	N72	max	-0.011	7	-0.067	7	0.72	4	-1.028e-4	5	6.809e-3	4	1.8e-3	5
136		min	-0.149	4	-0.114	5	-0.149	5	-1.25e-3	7	-5.297e-4	5	9.21e-4	7
137	N73	max	0.095	4	-0.026	7	0.719	4	-3.811e-5	5	6.697e-3	4	1.445e-3	6
138		min	-0.039	5	-0.112	5	-0.149	5	-1.206e-3	7	-5.663e-4	5	7.135e-4	7
139	N74	max	0.041	5	-0.138	7	1.237	4	-5.186e-4	5	6.908e-3	4	2.216e-3	5
140		min	-0.088	4	-0.248	5	-0.168	5	-1.501e-3	4	-3.79e-4	5	1.178e-3	7

Envelope Node Displacements (Continued)

	Node Label		X [in]	LC	Y [in]	LC	Z [in]	LC	X Rotation [rad]	LC	Y Rotation [rad]	LC	Z Rotation [rad]	LC
141	N75	max	0.149	4	-0.085	7	1.237	4	-5.308e-4	5	6.823e-3	4	1.873e-3	6
142		min	0.011	7	-0.228	5	-0.168	5	-1.503e-3	7	-4.888e-4	5	9.673e-4	7
143	N76	max	-0.016	7	-0.139	7	1.161	4	-5.559e-4	5	6.845e-3	4	2.235e-3	5
144		min	-0.16	4	-0.249	5	-0.19	5	-1.586e-3	4	-6.214e-4	5	1.187e-3	7
145	N77	max	0.089	4	-0.085	7	1.161	4	-5.837e-4	5	6.913e-3	4	1.955e-3	5
146		min	-0.048	5	-0.229	5	-0.19	5	-1.609e-3	4	-5.094e-4	5	1.013e-3	7
147	N78	max	0.051	5	-0.228	7	1.701	4	-9.707e-4	5	6.936e-3	4	2.657e-3	5
148		min	-0.079	4	-0.415	5	-0.191	5	-1.983e-3	4	-4.085e-4	5	1.44e-3	7
149	N79	max	0.162	4	-0.165	7	1.701	4	-1.006e-3	5	6.838e-3	4	2.379e-3	6
150		min	0.018	7	-0.38	5	-0.191	5	-1.977e-3	4	-5.266e-4	5	1.27e-3	7
151	N80	max	-0.02	7	-0.229	7	1.61	4	-1.058e-3	5	7.007e-3	4	2.752e-3	5
152		min	-0.168	4	-0.417	5	-0.23	5	-2.126e-3	4	-5.113e-4	5	1.499e-3	7
153	N81	max	0.083	4	-0.166	7	1.61	4	-1.024e-3	5	7.016e-3	4	2.488e-3	5
154		min	-0.055	5	-0.382	5	-0.23	5	-2.044e-3	4	-4.839e-4	5	1.335e-3	7
155	N82	max	0.058	5	-0.332	7	2.164	4	-1.268e-3	5	6.951e-3	4	2.925e-3	5
156		min	-0.073	4	-0.605	5	-0.218	5	-2.318e-3	4	-4.495e-4	5	1.601e-3	7
157	N83	max	0.171	4	-0.262	7	2.163	4	-1.318e-3	5	6.862e-3	4	2.718e-3	5
158		min	0.023	7	-0.559	5	-0.218	5	-2.333e-3	4	-5.514e-4	5	1.473e-3	7
159	N84	max	-0.022	7	-0.333	7	2.066	4	-1.337e-3	5	7.033e-3	4	3.005e-3	5
160		min	-0.173	4	-0.606	5	-0.267	5	-2.422e-3	4	-4.955e-4	5	1.649e-3	7
161	N85	max	0.08	4	-0.263	7	2.066	4	-1.322e-3	5	7.039e-3	4	2.804e-3	5
162		min	-0.06	5	-0.561	5	-0.267	5	-2.375e-3	4	-4.73e-4	5	1.524e-3	7
163	N86	max	0.062	5	-0.444	7	2.625	4	-1.44e-3	5	6.933e-3	4	3.081e-3	5
164		min	-0.069	4	-0.808	5	-0.249	5	-2.53e-3	4	-4.864e-4	5	1.694e-3	7
165	N87	max	0.177	4	-0.369	7	2.624	4	-1.492e-3	5	6.857e-3	4	2.904e-3	5
166		min	0.025	7	-0.754	5	-0.249	5	-2.554e-3	4	-5.735e-4	5	1.584e-3	7
167	N88	max	-0.023	7	-0.444	7	2.525	4	-1.489e-3	5	7.038e-3	4	3.169e-3	5
168		min	-0.175	4	-0.809	5	-0.301	5	-2.597e-3	4	-4.734e-4	5	1.747e-3	7
169	N89	max	0.078	4	-0.369	7	2.525	4	-1.473e-3	5	7.033e-3	4	2.999e-3	5
170		min	-0.062	5	-0.755	5	-0.301	5	-2.555e-3	4	-4.715e-4	5	1.642e-3	7
171	N90	max	0.064	5	-0.558	7	3.081	4	-1.445e-3	5	6.974e-3	4	3.021e-3	5
172		min	-0.067	4	-1.016	5	-0.283	5	-2.559e-3	4	-4.46e-4	5	1.661e-3	7
173	N91	max	0.179	4	-0.479	7	3.081	4	-1.605e-3	5	6.824e-3	4	2.814e-3	5
174		min	0.027	7	-0.955	5	-0.283	5	-2.701e-3	4	-5.964e-4	5	1.528e-3	7
175	N92	max	-0.023	7	-0.558	7	2.988	4	-1.475e-3	5	6.918e-3	4	3.021e-3	5
176		min	-0.175	4	-1.016	5	-0.332	5	-2.592e-3	4	-5.775e-4	5	1.661e-3	7
177	N93	max	0.078	4	-0.479	7	2.988	4	-1.606e-3	5	7.09e-3	4	2.802e-3	5
178		min	-0.063	5	-0.955	5	-0.332	5	-2.703e-3	4	-4.005e-4	5	1.521e-3	7

Envelope Member Section Stresses

	Member	Sec		Axial[psi]	LC	y Shear[psi]	LC	z Shear[psi]	LC	y-Top[psi]	LC	y-Bot[psi]	LC	z-Top[psi]	LC	z-Bot[psi]	LC
1	M1	1	max	-897.371	7	44.882	7	75.899	4	3284.135	4	480.813	7	312.151	4	581.584	7
2			min	-2002.44	5	-108.535	4	-15.702	7	-480.812	7	-3284.141	4	-505.406	7	-359.2	4
3		2	max	-895.811	7	44.882	7	75.899	4	2526.038	4	231.789	7	86.711	6	303.143	7
4			min	-1999.841	5	-108.535	4	-15.702	7	-231.788	7	-2526.042	4	-263.436	7	-99.781	6
5		3	max	-894.252	7	44.882	7	75.899	4	1767.94	4	-17.236	7	16.348	5	263.656	4
6			min	-1997.242	5	-108.535	4	-15.702	7	17.236	7	-1767.943	4	-229.121	4	-18.812	5
7		4	max	-892.693	7	44.882	7	75.899	4	1009.843	4	365.185	5	220.502	7	575.084	4
8			min	-1994.643	5	-108.535	4	-15.702	7	-365.185	5	-1009.845	4	-499.757	4	-253.737	7
9		5	max	-891.133	7	44.882	7	75.899	4	515.284	7	781.696	5	462.471	7	886.512	4
10			min	-1992.044	5	-108.535	4	-15.702	7	-781.694	5	-515.285	7	-770.393	4	-532.178	7
11	M2	1	max	-233.802	7	272.02	4	17.994	7	144.836	7	1953.232	4	691.967	4	258.14	7
12			min	-3135.422	5	9.793	7	-329.725	4	-1953.229	4	-144.836	7	-224.328	7	-796.265	4
13		2	max	-232.589	7	272.02	4	17.994	7	118.622	7	48.443	6	319.845	4	51.936	7
14			min	-3133.4	5	9.793	7	-329.725	4	-48.443	6	-118.622	7	-45.133	7	-368.054	4

Envelope Member Section Stresses (Continued)

	Member	Sec		Axial[psi]	LC	y Shear[psi]	LC	z Shear[psi]	LC	y-Top[psi]	LC	y-Bot[psi]	LC	z-Top[psi]	LC	z-Bot[psi]	LC
15		3	max	-231.377	7	272.02	4	17.994	7	1893.74	4	-92.407	7	141.611	2	60.156	4
16			min	-3131.379	5	9.793	7	-329.725	4	92.407	7	-1893.743	4	-52.277	4	-162.955	2
17		4	max	-230.164	7	272.02	4	17.994	7	3817.224	4	-66.193	7	313.256	7	488.367	4
18			min	-3129.358	5	9.793	7	-329.725	4	66.193	7	-3817.231	4	-424.399	4	-360.472	7
19		5	max	-228.951	7	272.02	4	17.994	7	5740.708	4	-39.978	7	492.451	7	916.578	4
20			min	-3127.337	5	9.793	7	-329.725	4	39.978	7	-5740.719	4	-796.521	4	-566.676	7
21	M3	1	max	618.903	4	-14.372	7	3.814	7	234.227	7	473.451	4	1556.485	4	-259.636	7
22			min	-3713.238	5	-20.099	2	-89.702	4	-473.45	4	-234.227	7	225.628	7	-1791.089	4
23		2	max	620.924	4	-14.372	7	3.814	7	176.095	7	344.526	5	850.436	4	-181.288	7
24			min	-3711.217	5	-20.099	2	-89.702	4	-344.525	5	-176.095	7	157.542	7	-978.62	4
25		3	max	622.945	4	-14.372	7	3.814	7	117.963	7	299.482	5	190.071	5	-102.941	7
26			min	-3709.196	5	-20.099	2	-89.702	4	-299.481	5	-117.963	7	89.457	7	-218.72	5
27		4	max	624.966	4	-14.372	7	3.814	7	197.021	4	254.437	5	21.372	7	646.319	4
28			min	-3707.175	5	-20.099	2	-89.702	4	-254.437	5	-197.021	4	-561.662	4	-24.593	7
29		5	max	626.987	4	-14.372	7	3.814	7	420.511	4	209.393	5	-46.713	7	1458.788	4
30			min	-3705.154	5	-20.099	2	-89.702	4	-209.393	5	-420.512	4	-1267.71	4	53.754	7
31	M4	1	max	1803.305	4	284.549	4	86.584	2	744.325	7	5247.796	4	-2573.859	5	3828.863	2
32			min	-4239.613	5	40.21	7	-182.258	4	-5247.786	4	-744.327	7	-3327.343	2	2961.809	5
33		2	max	1805.759	4	284.549	4	86.584	2	581.87	7	3435.846	4	-1683.678	5	2500.363	2
34			min	-4237.159	5	40.21	7	-182.258	4	-3435.84	4	-581.871	7	-2172.856	2	1937.454	5
35		3	max	1808.213	4	284.549	4	86.584	2	419.414	7	1623.896	4	-793.497	5	1476.439	4
36			min	-4234.704	5	40.21	7	-182.258	4	-1623.893	4	-419.415	7	-1283.049	4	913.098	5
37		4	max	1810.667	4	284.549	4	86.584	2	256.959	7	236.372	5	136.118	2	554.671	4
38			min	-4232.25	5	40.21	7	-182.258	4	-236.371	5	-256.959	7	-482.018	4	-156.635	2
39		5	max	1813.122	4	284.549	4	86.584	2	2000	4	233.589	5	1290.605	2	-367.096	4
40			min	-4229.796	5	40.21	7	-182.258	4	-233.589	5	-2000.004	4	319.013	4	-1485.134	2
41	M5	1	max	1590.838	7	665.497	4	194.86	2	1124.541	7	7058.776	4	-1105.629	5	2692.379	4
42			min	-5765.002	5	45.065	5	-404.498	4	-7058.763	4	-1124.543	7	-2339.72	4	1272.277	5
43		2	max	1592.051	7	665.497	4	194.86	2	717.913	7	3638.523	4	65.525	5	1028.609	7
44			min	-5762.981	5	45.065	5	-404.498	4	-3638.516	4	-717.915	7	-893.877	7	-75.401	5
45		3	max	1593.264	7	665.497	4	194.86	2	311.286	7	297.78	6	1236.678	5	-627.292	7
46			min	-5760.96	5	45.065	5	-404.498	4	-297.779	6	-311.287	7	545.127	7	-1423.079	5
47		4	max	1594.476	7	665.497	4	194.86	2	3201.978	4	577.847	5	2744.526	2	-2283.193	7
48			min	-5758.939	5	45.065	5	-404.498	4	-577.846	5	-3201.984	4	1984.131	7	-3158.2	2
49		5	max	1595.689	7	665.497	4	194.86	2	6622.225	4	870.266	5	4392.799	4	-3939.093	7
50			min	-5756.918	5	45.065	5	-404.498	4	-870.264	5	-6622.237	4	3423.135	7	-5054.911	4
51	M6	1	max	2390.894	7	646.24	4	294.295	5	2619.235	5	7179.502	4	-1361.577	4	2400.825	2
52			min	-6024.122	5	-58.804	5	-447.856	4	-7179.489	4	-2619.239	5	-2086.355	2	1566.803	4
53		2	max	2392.106	7	646.24	4	294.295	5	1490.55	5	3682.209	4	-82.239	4	591.371	7
54			min	-6022.101	5	-58.804	5	-447.856	4	-3682.202	4	-1490.552	5	-513.911	7	94.635	4
55		3	max	2393.319	7	646.24	4	294.295	5	361.865	5	256.26	7	1248.532	5	-599.306	7
56			min	-6020.08	5	-58.804	5	-447.856	4	-256.26	7	-361.865	5	520.807	7	-1436.719	5
57		4	max	2394.532	7	646.24	4	294.295	5	3312.371	4	766.822	5	2767.146	5	-1789.983	7
58			min	-6018.059	5	-58.804	5	-447.856	4	-766.82	5	-3312.377	4	1555.524	7	-3184.229	5
59		5	max	2395.744	7	646.24	4	294.295	5	6809.657	4	1895.509	5	4298.241	2	-2980.66	7
60			min	-6016.038	5	-58.804	5	-447.856	4	-1895.505	5	-6809.67	4	2590.242	7	-4946.101	2
61	M7	1	max	2318.177	7	277.401	4	122.19	5	1372.454	5	5236.028	4	-2269.556	7	3819.317	2
62			min	-4464.46	5	17.519	5	-177.972	4	-5236.019	4	-1372.456	5	-3319.047	2	2611.639	7
63		2	max	2319.65	7	277.401	4	122.19	5	966.163	5	3468.465	4	-1519.932	7	2493.298	2
64			min	-4462.006	5	17.519	5	-177.972	4	-3468.459	4	-966.165	5	-2166.716	2	1749.027	7
65		3	max	2321.123	7	277.401	4	122.19	5	559.873	5	1700.903	4	-770.308	7	1167.28	2
66			min	-4459.551	5	17.519	5	-177.972	4	-1700.899	4	-559.874	5	-1014.385	2	886.414	7
67		4	max	2322.595	7	277.401	4	122.19	5	153.583	5	142.037	7	241.043	5	130.955	4
68			min	-4457.097	5	17.519	5	-177.972	4	-142.037	7	-153.583	5	-113.802	4	-277.374	5
69		5	max	2324.068	7	277.401	4	122.19	5	1834.22	4	252.708	5	1335.076	5	-765.021	4

Envelope Member Section Stresses (Continued)

	Member	Sec		Axial[psi]	LC	y Shear[psi]	LC	z Shear[psi]	LC	y-Top[psi]	LC	y-Bot[psi]	LC	z-Top[psi]	LC	z-Bot[psi]	LC
70			min	-4454.643	5	17.519	5	-177.972	4	-252.708	5	-1834.223	4	664.815	4	-1536.308	5
71	M8	1	max	1717.226	4	14.625	4	-12.678	7	-65.801	5	182.171	4	911.758	5	-38.155	7
72			min	-3581.53	5	-3.66	5	-70.32	4	-182.171	4	65.801	5	33.157	7	-1049.184	5
73		2	max	1719.247	4	14.625	4	-12.678	7	90.761	6	55.66	7	571.508	5	6.764	7
74			min	-3579.509	5	-3.66	5	-70.32	4	-55.66	7	-90.761	6	-5.878	7	-657.649	5
75		3	max	1721.268	4	14.625	4	-12.678	7	360.882	4	-6.044	7	231.258	5	51.683	7
76			min	-3577.488	5	-3.66	5	-70.32	4	6.044	7	-360.883	4	-44.914	7	-266.115	5
77		4	max	1723.289	4	14.625	4	-12.678	7	632.408	4	-67.748	7	-83.949	7	322.261	4
78			min	-3575.467	5	-3.66	5	-70.32	4	67.748	7	-632.409	4	-280.05	4	96.602	7
79		5	max	1725.31	4	14.625	4	-12.678	7	903.935	4	-129.452	7	-122.984	7	735.556	4
80			min	-3573.445	5	-3.66	5	-70.32	4	129.452	7	-903.936	4	-639.21	4	141.522	7
81	M9	1	max	2451.162	4	253.594	4	97	5	934.372	5	525.528	4	-87.034	5	2348.013	4
82			min	-2751.74	5	-87.945	5	-57.581	4	-525.527	4	-934.374	5	-2040.461	4	100.152	5
83		2	max	2453.184	4	253.594	4	97	5	469.143	4	-67.049	7	-28.643	5	893.447	4
84			min	-2749.719	5	-87.945	5	-57.581	4	67.048	7	-469.144	4	-776.419	4	32.96	5
85		3	max	2455.205	4	253.594	4	97	5	1463.814	4	247.98	5	487.622	4	-3.24	7
86			min	-2747.698	5	-87.945	5	-57.581	4	-247.98	5	-1463.817	4	2.816	7	-561.12	4
87		4	max	2457.226	4	253.594	4	97	5	2458.484	4	839.157	5	1751.664	4	-101.425	5
88			min	-2745.677	5	-87.945	5	-57.581	4	-839.156	5	-2458.489	4	88.14	5	-2015.686	4
89		5	max	2459.247	4	253.594	4	97	5	3453.155	4	1430.335	5	3015.705	4	-168.617	5
90			min	-2743.656	5	-87.945	5	-57.581	4	-1430.332	5	-3453.161	4	146.531	5	-3470.253	4
91	M10	1	max	296.236	4	59.144	4	53.955	5	902.47	5	345.118	7	314.876	5	2113.092	4
92			min	-2183.66	5	-68.046	5	-7.55	7	-345.118	7	-902.471	5	-1836.311	4	-362.337	5
93		2	max	298.835	4	59.144	4	53.955	5	400.996	5	174.169	7	198.028	5	1566.687	4
94			min	-2181.061	5	-68.046	5	-7.55	7	-174.169	7	-400.997	5	-1361.476	4	-227.876	5
95		3	max	301.434	4	59.144	4	53.955	5	450.953	4	100.477	5	81.179	5	1020.282	4
96			min	-2178.462	5	-68.046	5	-7.55	7	-100.477	5	-450.954	4	-886.641	4	-93.415	5
97		4	max	304.033	4	59.144	4	53.955	5	701.8	4	601.951	5	221.709	7	473.876	4
98			min	-2175.863	5	-68.046	5	-7.55	7	-601.95	5	-701.801	4	-411.806	4	-255.127	7
99		5	max	306.632	4	59.144	4	53.955	5	952.647	4	1103.426	5	441.367	7	175.507	5
100			min	-2173.264	5	-68.046	5	-7.55	7	-1103.423	5	-952.649	4	-152.518	5	-507.893	7
101	M11	1	max	2002.807	4	682.628	4	247.198	5	1408.866	5	7256.887	4	-292.638	7	3747.154	5
102			min	-3699.261	7	41.294	7	-419.736	4	-7256.873	4	-1408.868	5	-3256.337	5	336.746	7
103		2	max	2004.828	4	682.628	4	247.198	5	869.746	5	3733.168	4	235.348	7	1329.932	5
104			min	-3698.048	7	41.294	7	-419.736	4	-3733.161	4	-869.748	5	-1155.732	5	-270.822	7
105		3	max	2006.85	4	682.628	4	247.198	5	330.626	5	290.227	7	1067.527	2	-878.39	7
106			min	-3696.836	7	41.294	7	-419.736	4	-290.227	7	-330.627	5	763.335	7	-1228.432	2
107		4	max	2008.871	4	682.628	4	247.198	5	3314.262	4	310.19	2	3045.477	5	-1485.958	7
108			min	-3695.623	7	41.294	7	-419.736	4	-310.19	2	-3314.268	4	1291.321	7	-3504.512	5
109		5	max	2010.892	4	682.628	4	247.198	5	6837.973	4	747.614	5	5146.082	5	-2093.526	7
110			min	-3694.41	7	41.294	7	-419.736	4	-747.613	5	-6837.986	4	1819.307	7	-5921.735	5
111	M12	1	max	2961.294	4	291.075	4	114.583	5	831.464	5	5369.467	4	-1275.823	7	4772.279	5
112			min	-2457.467	7	40.443	7	-188.465	4	-5369.457	4	-831.466	5	-4147.187	5	1468.124	7
113		2	max	2963.748	4	291.075	4	114.583	5	649.692	5	3508.096	4	-847.949	7	3129.217	5
114			min	-2455.994	7	40.443	7	-188.465	4	-3508.09	4	-649.693	5	-2719.34	5	975.757	7
115		3	max	2966.202	4	291.075	4	114.583	5	467.919	5	1646.725	4	-420.074	7	1538.564	4
116			min	-2454.522	7	40.443	7	-188.465	4	-1646.722	4	-467.92	5	-1337.037	4	483.391	7
117		4	max	2968.657	4	291.075	4	114.583	5	290.412	6	219.666	7	136.354	5	613.927	4
118			min	-2453.049	7	40.443	7	-188.465	4	-219.665	7	-290.412	6	-533.513	4	-156.906	5
119		5	max	2971.111	4	291.075	4	114.583	5	2076.012	4	117.789	7	1564.201	5	-310.71	4
120			min	-2451.577	7	40.443	7	-188.465	4	-117.789	7	-2076.016	4	270.012	4	-1799.968	5
121	M13	1	max	1781.051	4	-10.393	7	-1.061	5	233.855	5	428.215	4	1486.456	4	-497.823	5
122			min	-1878.653	7	-23.844	5	-87.034	4	-428.214	4	-233.855	5	432.616	5	-1710.505	4
123		2	max	1783.072	4	-10.393	7	-1.061	5	161.028	5	267.448	7	804.715	4	-313.007	5
124			min	-1877.44	7	-23.844	5	-87.034	4	-267.448	7	-161.028	5	272.008	5	-926.007	4

Envelope Member Section Stresses (Continued)

	Member	Sec		Axial[psi]	LC	y Shear[psi]	LC	z Shear[psi]	LC	y-Top[psi]	LC	y-Bot[psi]	LC	z-Top[psi]	LC	z-Bot[psi]	LC
125		3	max	1785.094	4	-10.393	7	-1.061	5	88.201	5	223.82	7	134.206	2	-119.096	7
126			min	-1876.228	7	-23.844	5	-87.034	4	-223.819	7	-88.201	5	103.496	7	-154.434	2
127		4	max	1787.115	4	-10.393	7	-1.061	5	227.235	4	180.191	7	-49.208	5	642.99	4
128			min	-1875.015	7	-23.844	5	-87.034	4	-180.191	7	-227.235	4	-558.768	4	56.625	5
129		5	max	1789.136	4	-10.393	7	-1.061	5	445.718	4	136.563	7	-209.815	5	1427.488	4
130			min	-1873.802	7	-23.844	5	-87.034	4	-136.563	7	-445.718	4	-1240.51	4	241.44	5
131	M14	1	max	807.768	4	261.41	4	9.319	5	108.677	5	1955.212	4	800.176	4	349.983	5
132			min	-1278.223	7	15.71	7	-342.67	4	-1955.208	4	-108.677	5	-304.141	5	-920.784	4
133		2	max	809.789	4	261.41	4	9.319	5	161.064	5	64.896	7	276.158	4	90.053	5
134			min	-1277.011	7	15.71	7	-342.67	4	-64.896	7	-161.065	5	-78.258	5	-317.782	4
135		3	max	811.81	4	261.41	4	9.319	5	1906.688	4	-93.15	7	147.626	5	285.219	4
136			min	-1275.798	7	15.71	7	-342.67	4	93.15	7	-1906.691	4	-247.86	4	-169.877	5
137		4	max	813.831	4	261.41	4	9.319	5	3837.636	4	-251.196	7	373.509	5	888.221	4
138			min	-1274.585	7	15.71	7	-342.67	4	251.195	7	-3837.643	4	-771.878	4	-429.807	5
139		5	max	815.852	4	261.41	4	9.319	5	5768.584	4	-318.228	5	599.392	5	1491.222	4
140			min	-1273.373	7	15.71	7	-342.67	4	318.227	5	-5768.595	4	-1295.896	4	-689.737	5
141	M15	1	max	-505.816	7	15.525	4	57.797	5	887.77	5	371.852	4	2021.314	4	337.579	5
142			min	-1149.764	5	-40.658	5	-78.358	4	-371.852	4	-887.772	5	-293.362	5	-2325.98	4
143		2	max	-504.257	7	15.525	4	57.797	5	483.082	5	168.292	7	1500.276	4	174.04	5
144			min	-1147.165	5	-40.658	5	-78.358	4	-168.292	7	-483.083	5	-151.244	5	-1726.408	4
145		3	max	-502.697	7	15.525	4	57.797	5	399.941	4	4.444	7	979.239	4	10.501	5
146			min	-1144.566	5	-40.658	5	-78.358	4	-4.444	7	-399.942	4	-9.126	5	-1126.836	4
147		4	max	-501.138	7	15.525	4	57.797	5	785.837	4	326.295	5	458.201	4	286.812	7
148			min	-1141.967	5	-40.658	5	-78.358	4	-326.294	5	-785.839	4	-249.244	7	-527.264	4
149		5	max	-499.579	7	15.525	4	57.797	5	1171.733	4	730.984	5	275.11	5	580.188	7
150			min	-1139.368	5	-40.658	5	-78.358	4	-730.983	5	-1171.736	4	-504.192	7	-316.577	5
151	M16	1	max	1370.105	5	644.359	4	206.588	7	2083.082	7	7311.221	4	-881.654	7	2617.771	5
152			min	-4648.084	7	-76.12	7	-455.619	4	-7311.207	4	-2083.086	7	-2274.885	5	1014.543	7
153		2	max	1372.126	5	644.359	4	206.588	7	1179.402	7	3795.127	4	-28.642	4	759.735	5
154			min	-4646.871	7	-76.12	7	-455.619	4	-3795.12	4	-1179.404	7	-660.222	5	32.959	4
155		3	max	1374.147	5	644.359	4	206.588	7	275.722	7	340.385	6	1188.513	4	-921.783	7
156			min	-4645.659	7	-76.12	7	-455.619	4	-340.385	6	-275.723	7	801.044	7	-1367.654	4
157		4	max	1376.168	5	644.359	4	206.588	7	3237.055	4	627.959	7	2632.089	2	-1889.946	7
158			min	-4644.446	7	-76.12	7	-455.619	4	-627.958	7	-3237.061	4	1642.393	7	-3028.816	2
159		5	max	1378.189	5	644.359	4	206.588	7	6753.143	4	1531.64	7	4183.766	5	-2858.109	7
160			min	-4643.233	7	-76.12	7	-455.619	4	-1531.637	7	-6753.155	4	2483.742	7	-4814.371	5
161	M17	1	max	1976.964	6	276.569	4	84.32	2	1083.548	7	5355.734	4	-1658.234	7	4055.539	5
162			min	-3448.525	7	-3.213	7	-181.374	4	-5355.724	4	-1083.55	7	-3524.328	5	1908.175	7
163		2	max	1979.418	6	276.569	4	84.32	2	756.927	7	3578.195	4	-1049.622	7	2696.631	5
164			min	-3447.052	7	-3.213	7	-181.374	4	-3578.188	4	-756.928	7	-2343.415	5	1207.828	7
165		3	max	1981.872	6	276.569	4	84.32	2	430.305	7	1800.656	4	-441.009	7	1337.723	5
166			min	-3445.579	7	-3.213	7	-181.374	4	-1800.653	4	-430.306	7	-1162.503	5	507.481	7
167		4	max	1984.327	6	276.569	4	84.32	2	103.684	7	236.396	5	167.604	7	153.271	4
168			min	-3444.107	7	-3.213	7	-181.374	4	-236.395	5	-103.684	7	-133.195	4	-192.866	7
169		5	max	1986.781	6	276.569	4	84.32	2	1754.419	4	222.938	7	1234.642	2	-704.554	4
170			min	-3442.634	7	-3.213	7	-181.374	4	-222.938	7	-1754.422	4	612.268	4	-1420.736	2
171	M18	1	max	1942.143	4	12.602	4	-28.005	5	-51.247	7	267.838	6	783.931	4	-282.056	5
172			min	-2599.325	7	-6.032	7	-68.672	4	-267.838	6	51.247	7	245.111	5	-902.091	4
173		2	max	1944.164	4	12.602	4	-28.005	5	33.079	7	147.426	5	426.254	7	-133.061	5
174			min	-2598.113	7	-6.032	7	-68.672	4	-147.426	5	-33.079	7	115.632	5	-490.502	7
175		3	max	1946.185	4	12.602	4	-28.005	5	261.197	4	32.571	5	178.337	7	15.934	5
176			min	-2596.9	7	-6.032	7	-68.672	4	-32.571	5	-261.197	4	-13.847	5	-205.217	7
177		4	max	1948.206	4	12.602	4	-28.005	5	520.988	4	-82.284	5	-69.581	7	346.157	4
178			min	-2595.687	7	-6.032	7	-68.672	4	82.284	5	-520.989	4	-300.816	4	80.068	7
179		5	max	1950.227	4	12.602	4	-28.005	5	780.779	4	-197.139	5	-272.806	5	762.24	4

Envelope Member Section Stresses (Continued)

	Member	Sec		Axial[psi]	LC	y Shear[psi]	LC	z Shear[psi]	LC	y-Top[psi]	LC	y-Bot[psi]	LC	z-Top[psi]	LC	z-Bot[psi]	LC
180			min	-2594.475	7	-6.032	7	-68.672	4	197.138	5	-780.78	4	-662.399	4	313.925	5
181	M19	1	max	2681.748	4	260.884	4	71.034	2	595.329	7	683.962	4	124.197	7	2292.277	4
182			min	-1826.265	7	-69.854	7	-70.553	4	-683.961	4	-595.33	7	-1992.026	4	-142.916	7
183		2	max	2683.769	4	260.884	4	71.034	2	375.48	4	-80.076	5	59.219	7	879.868	4
184			min	-1825.052	7	-69.854	7	-70.553	4	80.076	5	-375.48	4	-764.619	4	-68.145	7
185		3	max	2685.79	4	260.884	4	71.034	2	1434.92	4	233.409	7	462.787	4	6.626	7
186			min	-1823.84	7	-69.854	7	-70.553	4	-233.408	7	-1434.922	4	-5.758	7	-532.541	4
187		4	max	2687.811	4	260.884	4	71.034	2	2494.36	4	647.778	7	1690.193	4	81.397	7
188			min	-1822.627	7	-69.854	7	-70.553	4	-647.777	7	-2494.365	4	-70.735	7	-1944.951	4
189		5	max	2689.832	4	260.884	4	71.034	2	3553.8	4	1062.147	7	2917.6	4	156.168	7
190			min	-1821.414	7	-69.854	7	-70.553	4	-1062.145	7	-3553.807	4	-135.712	7	-3357.36	4
191	M20	1	max	526.648	4	62.889	4	33.599	7	604.256	7	329.842	6	391.313	7	2027.216	4
192			min	-1218.512	7	-53.636	7	-11.277	4	-329.842	6	-604.257	7	-1761.683	4	-450.294	7
193		2	max	529.247	4	62.889	4	33.599	7	245.688	7	178.321	5	225.162	7	1534.716	4
194			min	-1216.953	7	-53.636	7	-11.277	4	-178.321	5	-245.688	7	-1333.693	4	-259.1	7
195		3	max	531.846	4	62.889	4	33.599	7	343.013	4	123.204	2	59.011	7	1042.215	4
196			min	-1215.393	7	-53.636	7	-11.277	4	-123.204	2	-343.014	4	-905.702	4	-67.905	7
197		4	max	534.445	4	62.889	4	33.599	7	647.863	4	471.45	7	233.741	5	549.715	4
198			min	-1213.834	7	-53.636	7	-11.277	4	-471.449	7	-647.864	4	-477.711	4	-268.972	5
199		5	max	537.044	4	62.889	4	33.599	7	952.713	4	830.019	7	454.196	5	314.484	7
200			min	-1212.275	7	-53.636	7	-11.277	4	-830.017	7	-952.715	4	-273.291	7	-522.656	5
201	M21	1	max	0	7	-161.932	7	0	7	0	7	0	7	0	7	0	7
202			min	0	2	-269.886	5	0	2	0	2	0	2	0	2	0	2
203		2	max	0	7	-168.65	7	0	7	-725.042	7	1208.404	2	0	7	0	7
204			min	0	2	-281.083	5	0	2	-1208.404	2	725.042	7	0	2	0	2
205		3	max	0	7	-175.368	7	0	7	-1479.553	7	2465.922	5	0	7	0	7
206			min	0	2	-292.28	5	0	2	-2465.922	5	1479.553	7	0	2	0	2
207		4	max	0	7	-182.086	7	0	7	-2263.533	7	3772.556	5	0	7	0	7
208			min	0	2	-303.477	5	0	2	-3772.556	5	2263.533	7	0	2	0	2
209		5	max	0	7	-188.804	7	0	7	-3076.982	7	5128.304	5	0	7	0	7
210			min	0	2	-314.674	5	0	2	-5128.304	5	3076.982	7	0	2	0	2
211	M22	1	max	4678.977	4	73.853	4	24.097	7	523.712	7	2132.074	4	1549.325	4	823.162	7
212			min	-1306.199	7	-4.787	7	-143.226	4	-2132.07	4	-523.713	7	-669.343	7	-1905.368	4
213		2	max	4678.977	4	73.853	4	27.63	7	328.014	7	764.848	4	709.765	4	495.56	7
214			min	-1306.199	7	-4.787	7	-137.338	4	-764.846	4	-328.014	7	-402.958	7	-872.872	4
215		3	max	4678.977	4	73.853	4	31.163	7	564.782	4	-109.758	7	-55.377	4	156.794	2
216			min	-1306.199	7	-4.787	7	-131.45	4	109.757	7	-564.783	4	-127.495	2	68.103	4
217		4	max	4678.977	4	73.853	4	34.696	7	1856.815	4	131.056	7	263.764	7	917.558	4
218			min	-1306.199	7	-4.787	7	-125.561	4	-131.056	7	-1856.818	4	-746.101	4	-324.379	7
219		5	max	4678.977	4	73.853	4	38.229	7	3111.252	4	394.428	7	664.103	7	1675.493	4
220			min	-1306.199	7	-4.787	7	-119.673	4	-394.427	7	-3111.258	4	-1362.406	4	-816.717	7
221	M23	1	max	0	7	314.674	2	0	7	-3076.982	7	5128.304	3	0	7	0	7
222			min	0	2	188.804	7	0	2	-5128.304	3	3076.982	7	0	2	0	2
223		2	max	0	7	303.477	2	0	7	-2263.533	7	3772.556	3	0	7	0	7
224			min	0	2	182.086	7	0	2	-3772.556	3	2263.533	7	0	2	0	2
225		3	max	0	7	292.28	2	0	7	-1479.553	7	2465.922	3	0	7	0	7
226			min	0	2	175.368	7	0	2	-2465.922	3	1479.553	7	0	2	0	2
227		4	max	0	7	281.083	2	0	7	-725.042	7	1208.404	5	0	7	0	7
228			min	0	2	168.65	7	0	2	-1208.404	3	725.042	7	0	2	0	2
229		5	max	0	7	269.886	2	0	7	0	7	0	7	0	7	0	7
230			min	0	2	161.932	7	0	2	0	2	0	2	0	2	0	2
231	M24	1	max	0	7	314.674	5	0	7	-3076.982	7	5128.304	5	0	7	0	7
232			min	0	2	188.804	7	0	2	-5128.304	5	3076.982	7	0	2	0	2
233		2	max	0	7	303.477	5	0	7	-2263.533	7	3772.556	5	0	7	0	7
234			min	0	2	182.086	7	0	2	-3772.556	5	2263.533	7	0	2	0	2

Envelope Member Section Stresses (Continued)

	Member	Sec		Axial[psi]	LC	y Shear[psi]	LC	z Shear[psi]	LC	y-Top[psi]	LC	y-Bot[psi]	LC	z-Top[psi]	LC	z-Bot[psi]	LC
235		3	max	0	7	292.28	5	0	7	-1479.553	7	2465.922	5	0	7	0	7
236			min	0	2	175.368	7	0	2	-2465.922	5	1479.553	7	0	2	0	2
237		4	max	0	7	281.083	5	0	7	-725.042	7	1208.404	5	0	7	0	7
238			min	0	2	168.65	7	0	2	-1208.404	5	725.042	7	0	2	0	2
239		5	max	0	7	269.886	5	0	7	0	7	0	7	0	7	0	7
240			min	0	2	161.932	7	0	2	0	2	0	2	0	2	0	2
241	M25	1	max	4676.105	4	74.041	4	22.423	5	615.463	5	2148.929	4	1605.226	4	904.719	5
242			min	-1320.012	5	-4.571	5	-145.396	4	-2148.925	4	-615.464	5	-735.66	5	-1974.115	4
243		2	max	4676.105	4	74.041	4	28.311	5	424.31	5	766.645	4	740.614	4	581.492	5
244			min	-1320.012	5	-4.571	5	-139.508	4	-766.643	4	-424.311	5	-472.833	5	-910.811	4
245		3	max	4676.105	4	74.041	4	34.199	5	578.043	4	-136.255	7	-49.579	4	166.746	5
246			min	-1320.012	5	-4.571	5	-133.62	4	136.255	7	-578.044	4	-135.587	5	60.972	4
247		4	max	4676.105	4	74.041	4	40.088	5	1885.134	4	70.783	5	276.077	5	941.236	4
248			min	-1320.012	5	-4.571	5	-127.732	4	-70.783	5	-1885.137	4	-765.353	4	-339.521	5
249		5	max	4676.105	4	74.041	4	45.976	5	3154.629	4	374.724	5	762.159	5	1729.979	4
250			min	-1320.012	5	-4.571	5	-121.843	4	-374.723	5	-3154.635	4	-1406.71	4	-937.308	5
251	M26	1	max	0	7	-161.932	7	0	7	0	7	0	7	0	7	0	7
252			min	0	2	-269.886	6	0	2	0	2	0	2	0	2	0	2
253		2	max	0	7	-168.65	7	0	7	-725.042	7	1208.404	5	0	7	0	7
254			min	0	2	-281.083	6	0	2	-1208.404	2	725.042	7	0	2	0	2
255		3	max	0	7	-175.368	7	0	7	-1479.553	7	2465.922	5	0	7	0	7
256			min	0	2	-292.28	6	0	2	-2465.922	5	1479.553	7	0	2	0	2
257		4	max	0	7	-182.086	7	0	7	-2263.533	7	3772.556	6	0	7	0	7
258			min	0	2	-303.477	6	0	2	-3772.556	6	2263.533	7	0	2	0	2
259		5	max	0	7	-188.804	7	0	7	-3076.982	7	5128.304	6	0	7	0	7
260			min	0	2	-314.674	6	0	2	-5128.304	6	3076.982	7	0	2	0	2
261	M27	1	max	0	7	-161.932	7	0	7	0	7	0	7	0	7	0	7
262			min	0	2	-269.886	2	0	2	0	2	0	2	0	2	0	2
263		2	max	0	7	-168.65	7	0	7	-725.042	7	1208.404	2	0	7	0	7
264			min	0	2	-281.083	2	0	2	-1208.404	2	725.042	7	0	2	0	2
265		3	max	0	7	-175.368	7	0	7	-1479.553	7	2465.922	2	0	7	0	7
266			min	0	2	-292.28	2	0	2	-2465.922	2	1479.553	7	0	2	0	2
267		4	max	0	7	-182.086	7	0	7	-2263.533	7	3772.556	2	0	7	0	7
268			min	0	2	-303.477	2	0	2	-3772.556	2	2263.533	7	0	2	0	2
269		5	max	0	7	-188.804	7	0	7	-3076.982	7	5128.304	2	0	7	0	7
270			min	0	2	-314.674	2	0	2	-5128.304	2	3076.982	7	0	2	0	2
271	M28	1	max	6120.312	4	-4.98	7	13.221	5	517.551	5	295.836	4	3877.619	4	358.584	5
272			min	86.683	7	-72.482	4	-98.006	4	-295.835	4	-517.552	5	-291.578	5	-4768.715	4
273		2	max	6120.312	4	-4.98	7	19.109	5	317.846	5	151.66	4	1760.103	4	342.235	5
274			min	86.683	7	-72.482	4	-92.118	4	-151.66	4	-317.846	5	-278.284	5	-2164.583	4
275		3	max	6120.312	4	-4.98	7	24.997	5	165.791	7	45.08	4	-9.93	7	348.028	4
276			min	86.683	7	-72.482	4	-86.23	4	-45.08	4	-165.791	7	-282.995	4	12.212	7
277		4	max	6120.312	4	-4.98	7	30.885	5	157.208	7	194.352	5	-28.44	5	2769.119	4
278			min	86.683	7	-72.482	4	-80.342	4	-194.351	5	-157.208	7	-2251.673	4	34.975	5
279		5	max	6120.312	4	-4.98	7	36.774	5	126.067	7	506.844	5	208.11	5	5098.691	4
280			min	86.683	7	-72.482	4	-74.453	4	-506.843	5	-126.067	7	-4145.934	4	-255.935	5
281	M29	1	max	0	7	314.674	6	0	7	-3076.982	7	5128.304	2	0	7	0	7
282			min	0	2	188.804	7	0	2	-5128.304	2	3076.982	7	0	2	0	2
283		2	max	0	7	303.477	6	0	7	-2263.533	7	3772.556	2	0	7	0	7
284			min	0	2	182.086	7	0	2	-3772.556	2	2263.533	7	0	2	0	2
285		3	max	0	7	292.28	6	0	7	-1479.553	7	2465.922	2	0	7	0	7
286			min	0	2	175.368	7	0	2	-2465.922	2	1479.553	7	0	2	0	2
287		4	max	0	7	281.083	6	0	7	-725.042	7	1208.404	4	0	7	0	7
288			min	0	2	168.65	7	0	2	-1208.404	4	725.042	7	0	2	0	2
289		5	max	0	7	269.886	6	0	7	0	7	0	7	0	7	0	7

Envelope Member Section Stresses (Continued)

	Member	Sec		Axial[psi]	LC	y Shear[psi]	LC	z Shear[psi]	LC	y-Top[psi]	LC	y-Bot[psi]	LC	z-Top[psi]	LC	z-Bot[psi]	LC
290			min	0	2	161.932	7	0	2	0	2	0	2	0	2	0	2
291	M30	1	max	0	7	-161.932	7	0	7	0	7	0	7	0	7	0	7
292			min	0	2	-269.886	6	0	2	0	2	0	2	0	2	0	2
293		2	max	0	7	-168.65	7	0	7	-725.042	7	1208.404	4	0	7	0	7
294			min	0	2	-281.083	6	0	2	-1208.404	4	725.042	7	0	2	0	2
295		3	max	0	7	-175.368	7	0	7	-1479.553	7	2465.922	4	0	7	0	7
296			min	0	2	-292.28	6	0	2	-2465.922	4	1479.553	7	0	2	0	2
297		4	max	0	7	-182.086	7	0	7	-2263.533	7	3772.556	4	0	7	0	7
298			min	0	2	-303.477	6	0	2	-3772.556	4	2263.533	7	0	2	0	2
299		5	max	0	7	-188.804	7	0	7	-3076.982	7	5128.304	6	0	7	0	7
300			min	0	2	-314.674	6	0	2	-5128.304	6	3076.982	7	0	2	0	2
301	M31	1	max	6120.278	4	-9.063	5	8.92	7	324.758	2	373.478	4	3943.981	4	276.794	7
302			min	132.824	7	-71.246	4	-102.144	4	-373.477	4	-324.759	2	-225.072	7	-4850.328	4
303		2	max	6120.278	4	-9.063	5	12.453	7	253.93	2	194.997	4	1789.79	4	255.593	7
304			min	132.824	7	-71.246	4	-96.255	4	-194.997	4	-253.931	2	-207.832	7	-2201.092	4
305		3	max	6120.278	4	-9.063	5	15.985	7	216.68	5	54.111	4	-63.563	5	356.623	4
306			min	132.824	7	-71.246	4	-90.367	4	-54.111	4	-216.681	5	-289.984	4	78.17	5
307		4	max	6120.278	4	-9.063	5	19.518	7	155.356	5	156.907	7	-39.4	7	2822.819	4
308			min	132.824	7	-71.246	4	-84.479	4	-156.906	7	-155.356	5	-2295.339	4	48.454	7
309		5	max	6120.278	4	-9.063	5	23.051	7	114.873	4	352.327	7	111.793	7	5197.495	4
310			min	132.824	7	-71.246	4	-78.591	4	-352.327	7	-114.873	4	-4226.275	4	-137.483	7
311	M32	1	max	0	7	314.674	2	0	7	-3076.982	7	5128.304	3	0	7	0	7
312			min	0	2	188.804	7	0	2	-5128.304	3	3076.982	7	0	2	0	2
313		2	max	0	7	303.477	2	0	7	-2263.533	7	3772.556	3	0	7	0	7
314			min	0	2	182.086	7	0	2	-3772.556	3	2263.533	7	0	2	0	2
315		3	max	0	7	292.28	2	0	7	-1479.553	7	2465.922	3	0	7	0	7
316			min	0	2	175.368	7	0	2	-2465.922	3	1479.553	7	0	2	0	2
317		4	max	0	7	281.083	2	0	7	-725.042	7	1208.404	3	0	7	0	7
318			min	0	2	168.65	7	0	2	-1208.404	3	725.042	7	0	2	0	2
319		5	max	0	7	269.886	2	0	7	0	7	0	7	0	7	0	7
320			min	0	2	161.932	7	0	2	0	2	0	2	0	2	0	2
321	M33	1	max	2412.745	4	86.159	4	39.034	5	204.895	5	3819.183	4	4860.142	4	474.112	2
322			min	1384.739	7	-28.079	5	-480.222	4	-3819.176	4	-204.896	5	-379.69	2	-6068.77	4
323		2	max	2412.745	4	80.311	4	39.034	5	7.175	7	2014.634	4	2368.178	4	332.806	2
324			min	1384.739	7	-33.927	5	-480.222	4	-2014.63	4	-7.175	7	-266.526	2	-2957.1	4
325		3	max	2412.745	4	74.464	4	39.034	5	-58.409	7	262.438	5	-130.453	7	237.335	2
326			min	1384.739	7	-39.775	5	-480.222	4	-262.438	5	58.409	7	-190.069	2	162.895	7
327		4	max	2412.745	4	68.616	4	39.034	5	1538.279	4	524.197	5	-43.692	7	3403.746	4
328			min	1384.739	7	-45.622	5	-480.222	4	-524.196	5	-1538.282	4	-2725.871	4	54.557	7
329		5	max	2412.745	4	62.768	4	39.034	5	3286.641	4	804.683	5	21.046	7	6652.922	4
330			min	1384.739	7	-51.47	5	-480.222	4	-804.682	5	-3286.648	4	-5327.956	4	-26.28	7
331	M34	1	max	321.608	6	30.294	5	361.586	4	2637.03	4	615.162	5	637.327	2	4885.855	4
332			min	-328.134	7	-35.279	4	-51.551	5	-615.161	5	-2637.035	4	-3912.811	4	-795.818	2
333		2	max	321.608	6	24.446	5	361.586	4	1356.653	4	362.405	5	375.874	2	2351.103	4
334			min	-328.134	7	-41.126	4	-51.551	5	-362.404	5	-1356.655	4	-1882.868	4	-469.348	2
335		3	max	321.608	6	18.599	5	361.586	4	57.548	4	128.376	5	110.368	4	-41.324	7
336			min	-328.134	7	-46.974	4	-51.551	5	-128.375	5	-57.548	4	33.094	7	-137.814	4
337		4	max	321.608	6	12.751	5	361.586	4	86.925	5	1260.288	4	2066.896	4	346.879	7
338			min	-328.134	7	-52.822	4	-51.551	5	-1260.285	4	-86.926	5	-277.796	7	-2580.895	4
339		5	max	321.608	6	6.903	5	361.586	4	283.499	5	2596.851	4	3986.717	4	785.077	2
340			min	-328.134	7	-58.669	4	-51.551	5	-2596.846	4	-283.499	5	-628.724	2	-4978.141	4
341	M35	1	max	2401.308	4	95.323	4	35.118	2	127.385	2	3851.108	4	4777.323	4	612.812	5
342			min	1419.575	7	-11.854	7	-479.227	4	-3851.101	4	-127.385	2	-490.767	5	-5965.356	4
343		2	max	2401.308	4	89.475	4	35.118	2	-9.836	7	2020.396	4	2349.128	4	423.62	5
344			min	1419.575	7	-16.255	2	-479.227	4	-2020.392	4	9.836	7	-339.253	5	-2933.314	4

Envelope Member Section Stresses (Continued)

	Member	Sec		Axial[psi]	LC	y Shear[psi]	LC	z Shear[psi]	LC	y-Top[psi]	LC	y-Bot[psi]	LC	z-Top[psi]	LC	z-Bot[psi]	LC
345		3	max	2401.308	4	83.628	4	35.118	2	-142.626	7	208.412	4	-73.883	7	280.262	5
346			min	1419.575	7	-22.103	2	-479.227	4	-208.411	4	142.627	7	-224.446	5	92.256	7
347		4	max	2401.308	4	77.78	4	35.118	2	1584.842	4	394.295	2	-50.527	7	3268.276	4
348			min	1419.575	7	-27.951	2	-479.227	4	-394.294	2	-1584.845	4	-2617.381	4	63.092	7
349		5	max	2401.308	4	71.932	4	35.118	2	3359.367	4	605.644	2	-49.196	7	6437.825	4
350			min	1419.575	7	-33.798	2	-479.227	4	-605.643	2	-3359.373	4	-5155.697	4	61.43	7
351	M36	1	max	284.827	4	26.533	7	360.54	4	2473.957	4	401.427	7	842.737	5	5165.433	4
352			min	-36.671	7	-21.971	4	-46.078	2	-401.426	7	-2473.962	4	-4136.709	4	-1052.311	5
353		2	max	284.827	4	23.024	7	360.54	4	1239.552	4	221.516	7	471.92	5	2534.568	4
354			min	-36.671	7	-27.818	4	-46.078	2	-221.516	7	-1239.554	4	-2029.795	4	-589.278	5
355		3	max	284.827	4	19.516	7	360.54	4	-13.582	4	66.868	2	84.753	2	-50.462	4
356			min	-36.671	7	-33.666	4	-46.078	2	-66.868	2	13.582	4	40.412	4	-105.829	2
357		4	max	284.827	4	16.007	7	360.54	4	104.595	7	1285.446	4	2073.912	4	474.293	5
358			min	-36.671	7	-39.514	4	-46.078	2	-1285.443	4	-104.595	7	-379.835	5	-2589.656	4
359		5	max	284.827	4	12.499	7	360.54	4	250.796	7	2576.037	4	4070.705	4	1074.832	5
360			min	-36.671	7	-45.361	4	-46.078	2	-2576.032	4	-250.796	7	-860.773	5	-5083.015	4
361	M37	1	max	-1434.414	7	0.332	7	33.032	5	3503.752	4	-37.561	7	7061.377	4	457.394	5
362			min	-2403.371	5	-567.176	4	1.254	7	37.561	7	-3503.758	4	-366.301	5	-8817.413	4
363		2	max	-1434.414	7	0.332	7	38.88	5	1644.024	4	-28.987	7	3585.914	4	196.591	5
364			min	-2403.371	5	-567.176	4	4.763	7	28.987	7	-1644.027	4	-157.439	5	-4477.666	4
365		3	max	-1434.414	7	0.332	7	44.728	5	9.176	7	234.431	4	147.158	4	-110.047	5
366			min	-2403.371	5	-567.176	4	8.272	7	-234.431	4	-9.176	7	88.13	5	-183.754	4
367		4	max	-1434.414	7	0.332	7	50.575	5	-21.871	7	2131.618	4	370.406	5	4064.322	4
368			min	-2403.371	5	-567.176	4	11.78	7	-2131.614	4	21.871	7	-3254.89	4	-462.52	5
369		5	max	-1434.414	7	0.332	7	56.423	5	-64.155	7	4047.533	4	689.39	5	8266.564	4
370			min	-2403.371	5	-567.176	4	15.289	7	-4047.526	4	64.155	7	-6620.232	4	-860.828	5
371	M38	1	max	825.893	4	539.442	4	28.209	7	53.929	7	4620.335	4	-133.232	5	5774.82	4
372			min	-330.911	7	8.076	7	-182.358	4	-4620.327	4	-53.929	7	-4624.733	4	166.364	5
373		2	max	825.893	4	539.442	4	31.718	7	-16.169	7	2318.039	4	-132.946	5	2952.989	4
374			min	-330.911	7	8.076	7	-176.511	4	-2318.035	4	16.169	7	-2364.885	4	166.008	5
375		3	max	825.893	4	539.442	4	35.227	7	-34.472	4	126.254	2	-52.521	7	119.816	5
376			min	-330.911	7	8.076	7	-170.663	4	-126.254	2	34.472	4	-95.954	5	65.582	7
377		4	max	825.893	4	539.442	4	38.735	7	2230.364	4	190.077	7	2264.932	4	27.789	5
378			min	-330.911	7	8.076	7	-164.815	4	-190.076	7	-2230.368	4	-22.255	5	-2828.18	4
379		5	max	825.893	4	539.442	4	42.244	7	4476.471	4	293.885	7	4634.901	4	-110.073	5
380			min	-330.911	7	8.076	7	-158.968	4	-293.885	7	-4476.48	4	88.152	5	-5787.517	4
381	M39	1	max	-1445.802	7	-0.331	7	13.288	2	3414.989	4	-79.701	5	7229.69	4	235.624	7
382			min	-2382.795	2	-556.365	4	-20.549	4	79.7	5	-3414.995	4	-188.698	7	-9027.582	4
383		2	max	-1445.802	7	-0.331	7	19.136	2	1689.608	4	-33.627	5	3626.623	4	135.876	7
384			min	-2382.795	2	-556.365	4	-14.701	4	33.627	5	-1689.611	4	-108.816	7	-4528.498	4
385		3	max	-1445.802	7	-0.331	7	24.983	2	5.532	7	54.501	4	186.99	5	8.627	7
386			min	-2382.795	2	-556.365	4	-8.854	4	-54.501	4	-5.532	7	-6.909	7	-233.491	5
387		4	max	-1445.802	7	-0.331	7	30.831	2	-59.817	7	1817.341	4	332.119	5	4332.165	4
388			min	-2382.795	2	-556.365	4	-3.006	4	-1817.338	4	59.817	7	-3469.39	4	-414.711	5
389		5	max	-1445.802	7	-0.331	7	36.679	2	-136.403	7	3598.909	4	513.955	5	8693.743	4
390			min	-2382.795	2	-556.365	4	2.841	4	-3598.902	4	136.403	7	-6962.337	4	-641.766	5
391	M40	1	max	819.449	4	527.816	4	29.818	5	-8.964	5	4234.411	4	63.828	7	5995.866	4
392			min	-338.367	5	15.899	5	-160.602	4	-4234.403	4	8.964	5	-4801.756	4	-79.7	7
393		2	max	819.449	4	527.816	4	35.665	5	-62.903	5	2039.026	4	-8.71	7	3094.633	4
394			min	-338.367	5	15.899	5	-154.755	4	-2039.022	4	62.903	5	-2478.32	4	10.877	7
395		3	max	819.449	4	527.816	4	41.513	5	137.631	4	135.57	5	-59.224	7	147.566	4
396			min	-338.367	5	15.899	5	-148.907	4	-135.57	5	-137.631	4	-118.177	4	73.952	7
397		4	max	819.449	4	527.816	4	47.361	5	2295.556	4	226.965	5	2278.673	4	109.527	7
398			min	-338.367	5	15.899	5	-143.059	4	-226.965	5	-2295.561	4	-87.714	7	-2845.337	4
399		5	max	819.449	4	527.816	4	53.208	5	4434.754	4	337.088	5	4712.229	4	117.601	7

Envelope Member Section Stresses (Continued)

	Member	Sec		Axial[psi]	LC	y Shear[psi]	LC	z Shear[psi]	LC	y-Top[psi]	LC	y-Bot[psi]	LC	z-Top[psi]	LC	z-Bot[psi]	LC
400			min	-338.367	5	15.899	5	-137.212	4	-337.088	5	-4434.762	4	-94.18	7	-5884.075	4
401	M41	1	max	6106.737	4	-6.882	7	7.007	5	1137.268	4	-166.014	7	4411.668	4	212.786	5
402			min	57.278	7	-134.799	4	-54.59	4	166.013	7	-1137.27	4	-173.024	5	-5425.492	4
403		2	max	6106.737	4	-6.882	7	12.895	5	606.346	4	-151.479	7	2055.27	4	241.449	5
404			min	57.278	7	-134.799	4	-48.701	4	151.478	7	-606.348	4	-196.331	5	-2527.582	4
405		3	max	6106.737	4	-6.882	7	18.784	5	114.386	7	-12.812	5	15.513	7	278.808	4
406			min	57.278	7	-134.799	4	-42.813	4	12.812	5	-114.386	7	-226.709	4	-19.078	7
407		4	max	6106.737	4	-6.882	7	24.672	5	54.737	7	568.284	4	-19.689	5	2993.678	4
408			min	57.278	7	-134.799	4	-36.925	4	-568.283	4	-54.737	7	-2434.27	4	24.213	5
409		5	max	6106.737	4	-6.882	7	30.56	5	-27.47	7	1211.993	4	180.26	5	5617.027	4
410			min	57.278	7	-134.799	4	-31.037	4	-1211.991	4	27.47	7	-4567.413	4	-221.685	5
411	M42	1	max	4442.677	4	136.776	4	18.954	7	236.05	7	3600.061	4	755.045	4	762.602	7
412			min	-1319.893	7	0.77	7	-173.293	4	-3600.054	4	-236.05	7	-620.1	7	-928.558	4
413		2	max	4442.677	4	136.776	4	22.487	7	108.671	7	1639.108	4	330.729	4	428.578	7
414			min	-1319.893	7	0.77	7	-167.405	4	-1639.105	4	-108.672	7	-348.493	7	-406.732	4
415		3	max	4442.677	4	136.776	4	26.02	7	284.249	4	41.264	7	-19.168	4	47.284	2
416			min	-1319.893	7	0.77	7	-161.517	4	-41.264	7	-284.25	4	-38.449	2	23.573	4
417		4	max	4442.677	4	136.776	4	29.552	7	2170.008	4	213.757	7	328.675	7	362.358	4
418			min	-1319.893	7	0.77	7	-155.629	4	-213.757	7	-2170.012	4	-294.646	4	-404.206	7
419		5	max	4442.677	4	136.776	4	33.085	7	4018.171	4	408.808	7	734.236	7	609.622	4
420			min	-1319.893	7	0.77	7	-149.74	4	-408.807	7	-4018.178	4	-495.707	4	-902.967	7
421	M43	1	max	6118.446	4	-6.944	7	4.17	7	1118.217	4	-162.336	7	4462.039	4	159.852	7
422			min	45.079	7	-135.187	4	-55.87	4	162.336	7	-1118.219	4	-129.982	7	-5487.438	4
423		2	max	6118.446	4	-6.944	7	7.703	7	592.99	4	-80.095	7	2084.558	4	175.524	7
424			min	45.079	7	-135.187	4	-49.981	4	80.095	7	-592.991	4	-142.725	7	-2563.6	4
425		3	max	6118.446	4	-6.944	7	11.236	7	139.169	5	24.703	7	-22.069	5	268.718	4
426			min	45.079	7	-135.187	4	-44.093	4	-24.703	7	-139.169	5	-218.505	4	27.14	5
427		4	max	6118.446	4	-6.944	7	15.155	2	31.863	5	570.252	4	-34.258	7	3009.516	4
428			min	45.079	7	-135.187	4	-38.205	4	-570.251	4	-31.863	5	-2447.149	4	42.13	7
429		5	max	6118.446	4	-6.944	7	21.043	2	-113.038	5	1208.266	4	86.953	7	5658.794	4
430			min	45.079	7	-135.187	4	-32.317	4	-1208.264	4	113.039	5	-4601.374	4	-106.935	7
431	M44	1	max	4449.856	4	139.305	4	14.449	5	165.504	5	3681.568	4	798.786	4	837.251	5
432			min	-1348.618	5	4.996	5	-177.026	4	-3681.561	4	-165.504	5	-680.799	5	-982.351	4
433		2	max	4449.856	4	139.305	4	20.337	5	86.35	5	1680.629	4	359.264	4	489.271	5
434			min	-1348.618	5	4.996	5	-171.138	4	-1680.626	4	-86.35	5	-397.844	5	-441.825	4
435		3	max	4449.856	4	139.305	4	26.225	5	282.714	4	30.399	5	-5.839	4	49.771	5
436			min	-1348.618	5	4.996	5	-165.25	4	-30.398	5	-282.715	4	-40.47	5	7.181	4
437		4	max	4449.856	4	139.305	4	32.113	5	2208.459	4	184.743	5	391.322	5	364.666	4
438			min	-1348.618	5	4.996	5	-159.361	4	-184.743	5	-2208.463	4	-296.523	4	-481.25	5
439		5	max	4449.856	4	139.305	4	38.001	5	4096.608	4	376.683	5	897.533	5	630.631	4
440			min	-1348.618	5	4.996	5	-153.473	4	-376.682	5	-4096.615	4	-512.79	4	-1103.79	5
441	M45	1	max	1579.15	4	273.117	4	4.977	2	-2959.894	7	5763.463	4	467.535	4	71.253	2
442			min	11.68	7	-45.116	5	-13.434	4	-5763.463	4	2959.894	7	-210.271	2	-158.43	4
443		2	max	1579.15	4	268.141	4	4.977	2	-2923.139	7	5235.861	4	192.902	4	36.779	2
444			min	11.68	7	-50.092	5	-13.434	4	-5235.861	4	2923.139	7	-108.535	2	-65.367	4
445		3	max	1579.15	4	263.165	4	4.977	2	-2892.205	7	4717.961	4	2.63	7	27.695	4
446			min	11.68	7	-55.069	5	-13.434	4	-4717.961	4	2892.205	7	-81.731	4	-0.891	7
447		4	max	1579.15	4	258.188	4	4.977	2	-2867.093	7	4745.683	2	94.935	2	120.758	4
448			min	11.68	7	-60.045	5	-13.434	4	-4745.683	2	2867.093	7	-356.363	4	-32.17	2
449		5	max	1579.15	4	253.212	4	4.977	2	-2847.801	7	4847.81	5	196.671	2	213.821	4
450			min	11.68	7	-65.022	5	-13.434	4	-4847.81	5	2847.801	7	-630.996	4	-66.644	2
451	M46	1	max	1249.297	4	261.585	4	36.233	4	-2630.819	7	5670.462	4	-343.513	7	474.663	4
452			min	-344.277	7	-50.564	7	7.362	7	-5670.462	4	2630.819	7	-1400.753	4	116.404	7
453		2	max	1249.297	4	256.609	4	36.233	4	-2732.306	7	5165.342	4	-155.611	5	223.659	4
454			min	-344.277	7	-53.55	7	7.362	7	-5165.342	4	2732.306	7	-660.028	4	52.731	5

Envelope Member Section Stresses (Continued)

	Member	Sec		Axial[psi]	LC	y Shear[psi]	LC	z Shear[psi]	LC	y-Top[psi]	LC	y-Bot[psi]	LC	z-Top[psi]	LC	z-Bot[psi]	LC
455		3	max	1249.297	4	251.633	4	36.233	4	-2839.613	7	4679.877	2	80.696	4	14.4	7
456			min	-344.277	7	-56.536	7	7.362	7	-4679.877	2	2839.613	7	-42.496	7	-27.345	4
457		4	max	1249.297	4	246.656	4	36.233	4	-2952.742	7	4737.18	2	821.421	4	-36.601	7
458			min	-344.277	7	-59.521	7	7.362	7	-4737.18	2	2952.742	7	108.012	7	-278.349	4
459		5	max	1249.297	4	241.68	4	36.233	4	-3071.692	7	4804.184	2	1562.146	4	-87.603	7
460			min	-344.277	7	-62.507	7	7.362	7	-4804.184	2	3071.692	7	258.521	7	-529.353	4
461	M47	1	max	1576.919	4	279.658	4	5.985	5	-2602.51	7	5782.406	4	470.085	4	82.204	5
462			min	30.045	5	-30.458	7	-13.443	4	-5782.406	4	2602.51	7	-242.588	5	-159.294	4
463		2	max	1576.919	4	274.682	4	5.985	5	-2664.799	7	5242.053	4	195.26	4	40.743	5
464			min	30.045	5	-33.444	7	-13.443	4	-5242.053	4	2664.799	7	-120.235	5	-66.166	4
465		3	max	1576.919	4	269.705	4	5.985	5	-2732.91	7	4762.391	5	2.119	5	26.962	4
466			min	30.045	5	-36.43	7	-13.443	4	-4762.391	5	2732.91	7	-79.565	4	-0.718	5
467		4	max	1576.919	4	264.729	4	5.985	5	-2806.842	7	4755.506	5	124.472	5	120.09	4
468			min	30.045	5	-39.416	7	-13.443	4	-4755.506	5	2806.842	7	-354.391	4	-42.179	5
469		5	max	1576.919	4	259.753	4	5.985	5	-2886.595	7	4778.074	2	246.826	5	213.218	4
470			min	30.045	5	-42.402	7	-13.443	4	-4778.074	2	2886.595	7	-629.216	4	-83.64	5
471	M48	1	max	1246.871	4	265.97	4	36.405	4	-2915.701	7	5698.678	4	-203.836	7	477.069	4
472			min	-342.027	5	-57.445	5	6.201	7	-5698.678	4	2915.701	7	-1407.854	4	69.072	7
473		2	max	1246.871	4	260.994	4	36.405	4	-2845.963	7	5185.01	4	-77.062	7	224.878	4
474			min	-342.027	5	-62.422	5	6.201	7	-5185.01	4	2845.963	7	-663.627	4	26.113	7
475		3	max	1246.871	4	256.017	4	36.405	4	-2782.046	7	4723.118	5	80.6	4	13.729	5
476			min	-342.027	5	-67.398	5	6.201	7	-4723.118	5	2782.046	7	-40.516	5	-27.312	4
477		4	max	1246.871	4	251.041	4	36.405	4	-2723.951	7	4859.364	5	824.826	4	-59.805	7
478			min	-342.027	5	-72.374	5	6.201	7	-4859.364	5	2723.951	7	176.486	7	-279.503	4
479		5	max	1246.871	4	246.065	4	36.405	4	-2671.676	7	5005.312	5	1569.053	4	-102.764	7
480			min	-342.027	5	-77.351	5	6.201	7	-5005.312	5	2671.676	7	303.26	7	-531.693	4
481	M49	1	max	465.651	2	55.599	4	8.327	5	138.211	5	3153.062	4	1121.198	4	374.972	5
482			min	-399.848	4	6.841	5	-86.191	4	-3153.056	4	-138.211	5	-304.903	5	-1378.855	4
483		2	max	463.052	2	49.711	4	8.327	5	98.211	5	1899.335	4	521.785	4	106.287	5
484			min	-402.447	4	0.953	5	-86.191	4	-1899.331	4	-98.211	5	-86.426	5	-641.693	4
485		3	max	460.453	2	43.823	4	8.327	5	5.043	5	698.776	4	26.807	5	224.898	4
486			min	-405.046	4	-4.936	5	-86.191	4	-698.775	4	-5.043	5	-182.873	4	-32.968	5
487		4	max	457.854	2	37.935	4	8.327	5	448.614	4	141.293	5	34.796	5	1220.92	4
488			min	-407.645	4	-10.824	5	-86.191	4	-141.292	5	-448.615	4	-992.775	4	-42.793	5
489		5	max	455.255	2	32.046	4	8.327	5	1542.835	4	340.797	5	-62.458	5	2346.37	4
490			min	-410.244	4	-16.712	5	-86.191	4	-340.796	5	-1542.838	4	-1907.92	4	76.811	5
491	M50	1	max	1937.06	5	11.739	2	87.351	4	2484.017	4	68.24	7	-89.868	5	1735.776	4
492			min	-2878.753	4	-32.448	4	-1.294	7	-68.24	7	-2484.021	4	-1411.424	4	110.52	5
493		2	max	1934.461	5	6.977	7	87.351	4	1375.698	4	-22.391	7	28.9	5	593.67	4
494			min	-2881.352	4	-38.336	4	-1.294	7	22.391	7	-1375.701	4	-482.735	4	-35.541	5
495		3	max	1931.862	5	3.444	7	87.351	4	214.212	4	-49.963	5	340.709	4	-30.361	7
496			min	-2883.951	4	-44.225	4	-1.294	7	49.963	5	-214.212	4	24.688	7	-419.006	4
497		4	max	1929.263	5	-0.089	7	87.351	4	107.949	7	1000.444	4	1058.91	4	60.626	5
498			min	-2886.55	4	-50.113	4	-1.294	7	-1000.442	4	-107.949	7	-49.297	5	-1302.253	4
499		5	max	1926.664	5	-3.622	7	87.351	4	102.877	7	2268.268	4	1671.867	4	302.854	5
500			min	-2889.149	4	-56.001	4	-1.294	7	-2268.264	4	-102.877	7	-246.262	5	-2056.07	4
501	M51	1	max	415.884	2	57.279	4	8.681	7	215.48	7	3177.665	4	1154.34	4	302.089	7
502			min	-378.354	4	2.502	7	-88.451	4	-3177.659	4	-215.481	7	-245.64	7	-1419.613	4
503		2	max	413.286	2	51.391	4	8.681	7	143.737	7	1888.369	4	544.564	4	95.12	7
504			min	-380.953	4	-1.031	7	-88.451	4	-1888.365	4	-143.737	7	-77.346	7	-669.708	4
505		3	max	410.687	2	45.503	4	8.681	7	40.093	7	652.24	4	27.802	7	209.626	4
506			min	-383.552	4	-4.564	7	-88.451	4	-652.239	4	-40.093	7	-170.455	4	-34.191	7
507		4	max	408.088	2	39.614	4	8.681	7	530.719	4	95.452	7	69.803	7	1218.39	4
508			min	-386.151	4	-8.097	7	-88.451	4	-95.452	7	-530.72	4	-990.718	4	-85.844	7
509		5	max	405.489	2	33.726	4	8.681	7	1660.51	4	262.898	7	48.657	7	2356.583	4

Envelope Member Section Stresses (Continued)

	Member	Sec		Axial[psi]	LC	y Shear[psi]	LC	z Shear[psi]	LC	y-Top[psi]	LC	y-Bot[psi]	LC	z-Top[psi]	LC	z-Bot[psi]	LC
510			min	-388.75	4	-11.63	7	-88.451	4	-262.898	7	-1660.513	4	-1916.225	4	-59.839	7
511	M52	1	max	1842.813	7	13.414	5	88.2	4	2588.368	4	15.234	5	-43.057	7	1617.505	4
512			min	-2884.577	4	-36.595	4	-0.307	5	-15.234	5	-2588.373	4	-1315.253	4	52.952	7
513		2	max	1841.254	7	7.526	5	88.2	4	1434.936	4	-61.377	7	28.825	7	547.902	4
514			min	-2887.176	4	-42.484	4	-0.307	5	61.377	7	-1434.939	4	-445.519	4	-35.449	7
515		3	max	1839.694	7	1.638	5	88.2	4	228.336	4	-17.825	7	318.971	4	-46.192	7
516			min	-2889.775	4	-48.372	4	-0.307	5	17.825	7	-228.336	4	37.56	7	-392.272	4
517		4	max	1838.135	7	-4.25	5	88.2	4	117.215	5	1031.434	4	978.217	4	20.723	7
518			min	-2892.374	4	-54.26	4	-0.307	5	-1031.432	4	-117.216	5	-16.851	7	-1203.016	4
519		5	max	1836.576	7	-10.138	5	88.2	4	55.03	5	2344.372	4	1532.219	4	196.052	2
520			min	-2894.973	4	-60.148	4	-0.307	5	-2344.368	4	-55.03	5	-159.417	2	-1884.331	4
521	M53	1	max	-105.775	7	19.629	2	4.198	5	38.683	5	1577.874	4	1684.631	4	489.137	5
522			min	-7838.568	4	11.187	4	-51.948	4	-1577.871	4	-38.683	5	-397.735	5	-2071.768	4
523		2	max	-106.987	7	13.741	2	4.198	5	100.67	5	1091.035	4	984.901	4	172.903	5
524			min	-7840.589	4	5.299	4	-51.948	4	-1091.033	4	-100.67	5	-140.594	5	-1211.236	4
525		3	max	-108.2	7	9.549	7	4.198	5	115.031	5	651.821	4	190.897	4	32.197	7
526			min	-7842.61	4	-0.589	4	-51.948	4	-651.819	4	-115.031	5	-26.18	7	-234.766	4
527		4	max	-109.413	7	6.016	7	4.198	5	162.64	7	260.232	4	90.869	5	857.641	4
528			min	-7844.631	4	-6.478	4	-51.948	4	-260.231	4	-162.64	7	-697.379	4	-111.751	5
529		5	max	-110.625	7	2.483	7	4.198	5	287.05	7	-0.877	5	65.19	5	2065.985	4
530			min	-7846.652	4	-12.366	4	-51.948	4	0.877	5	-287.051	7	-1679.929	4	-80.172	5
531	M54	1	max	1715.024	5	15.825	5	51.483	4	51.848	7	93.409	6	29.091	7	823.905	4
532			min	-5318.1	4	-15.516	4	-0.803	7	-93.409	6	-51.848	7	-669.948	4	-35.776	7
533		2	max	1713.003	5	9.937	5	51.483	4	71.47	7	645.041	4	42.225	7	173.699	4
534			min	-5320.121	4	-21.404	4	-0.803	7	-645.04	4	-71.47	7	-141.241	4	-51.929	7
535		3	max	1710.982	5	4.049	5	51.483	4	73.389	2	1258.386	4	293.193	4	1.48	7
536			min	-5322.142	4	-27.292	4	-0.803	7	-1258.384	4	-73.389	2	-1.204	7	-360.57	4
537		4	max	1708.961	5	-1.839	5	51.483	4	55.575	5	1919.357	4	633.353	4	124.452	7
538			min	-5324.163	4	-33.181	4	-0.803	7	-1919.354	4	-55.575	5	-101.197	7	-778.901	4
539		5	max	1706.94	5	-7.727	5	51.483	4	8.603	5	2627.954	4	879.241	4	316.987	7
540			min	-5326.184	4	-39.069	4	-0.803	7	-2627.949	4	-8.603	5	-257.754	7	-1081.295	4
541	M55	1	max	-134.113	7	25.353	5	6.608	7	182.52	7	1254.906	4	1738.283	4	370.61	2
542			min	-7842.027	4	3.886	4	-45.957	4	-1254.904	4	-182.52	7	-301.356	2	-2137.75	4
543		2	max	-135.326	7	19.464	5	6.608	7	158.431	7	875.573	4	1017.574	4	128.021	2
544			min	-7844.048	4	-2.002	4	-45.957	4	-875.572	4	-158.432	7	-104.099	2	-1251.418	4
545		3	max	-136.538	7	13.576	5	6.608	7	111.763	2	543.866	4	202.592	4	45.596	5
546			min	-7846.069	4	-7.89	4	-45.957	4	-543.865	4	-111.763	2	-37.076	5	-249.148	4
547		4	max	-137.751	7	7.688	5	6.608	7	263.819	5	259.784	4	86.113	7	869.059	4
548			min	-7848.09	4	-13.779	4	-45.957	4	-259.784	4	-263.819	5	-706.664	4	-105.902	7
549		5	max	-138.964	7	1.8	5	6.608	7	406.771	5	85.287	7	80.338	7	2103.203	4
550			min	-7850.111	4	-19.667	4	-45.957	4	-85.287	7	-406.772	5	-1710.192	4	-98.8	7
551	M56	1	max	1671.053	7	11.028	2	52.41	4	90.969	5	53.991	4	-16.265	5	846.333	4
552			min	-5323.579	4	-15.259	4	0.038	5	-53.991	4	-90.969	5	-688.185	4	20.003	5
553		2	max	1669.841	7	6.761	7	52.41	4	126.32	5	625.133	4	54.924	5	172.827	4
554			min	-5325.6	4	-21.148	4	0.038	5	-625.132	4	-126.32	5	-140.532	4	-67.546	5
555		3	max	1668.628	7	3.228	7	52.41	4	114.046	5	1243.901	4	312.847	4	-39.158	5
556			min	-5327.621	4	-27.036	4	0.038	5	-1243.898	4	-114.046	5	31.841	5	-384.741	4
557		4	max	1667.415	7	-0.305	7	52.41	4	54.146	5	1910.294	4	671.954	4	105.167	5
558			min	-5329.642	4	-32.924	4	0.038	5	-1910.29	4	-54.146	5	-85.515	5	-826.372	4
559		5	max	1666.203	7	-3.838	7	52.41	4	-8.222	7	2624.312	4	936.787	4	365.43	5
560			min	-5331.664	4	-38.812	4	0.038	5	-2624.307	4	8.222	7	-297.145	5	-1152.065	4
561	M57	1	max	-87.088	7	14.958	2	3.408	5	26.73	5	1229.506	4	2834.193	4	195.341	5
562			min	-7878.721	4	-19.962	4	-41.459	4	-1229.504	4	-26.73	5	-158.839	5	-3485.505	4
563		2	max	-88.301	7	9.07	2	3.408	5	75.449	5	1079.446	4	1803.684	4	17.788	7
564			min	-7880.742	4	-25.85	4	-41.459	4	-1079.444	4	-75.449	5	-14.464	7	-2218.18	4

Envelope Member Section Stresses (Continued)

	Member	Sec		Axial[psi]	LC	y Shear[psi]	LC	z Shear[psi]	LC	y-Top[psi]	LC	y-Bot[psi]	LC	z-Top[psi]	LC	z-Bot[psi]	LC
565		3	max	-89.514	7	4.504	7	3.408	5	112.94	2	977.012	4	678.902	4	25.537	7
566			min	-7882.763	4	-31.738	4	-41.459	4	-977.01	4	-112.94	2	-20.765	7	-834.917	4
567		4	max	-90.726	7	0.971	7	3.408	5	180.245	7	922.203	4	175.048	5	664.283	4
568			min	-7884.784	4	-37.627	4	-41.459	4	-922.201	4	-180.245	7	-540.153	4	-215.275	5
569		5	max	-91.939	7	-2.562	7	3.408	5	227.717	7	915.019	4	97.798	5	2279.421	4
570			min	-7886.806	4	-43.515	4	-41.459	4	-915.018	4	-227.717	7	-1853.482	4	-120.272	5
571	M58	1	max	1784.348	5	26.59	5	51.288	4	743.645	4	203.938	5	788.194	4	917.27	5
572			min	-5950.371	4	-48.562	4	3.901	5	-203.938	5	-743.646	4	-745.867	5	-969.325	4
573		2	max	1782.327	5	20.702	5	51.288	4	250.398	7	87.781	4	784.706	4	374.874	5
574			min	-5952.392	4	-54.45	4	3.901	5	-87.781	4	-250.399	7	-304.824	5	-965.035	4
575		3	max	1780.305	5	14.813	5	51.288	4	150.492	7	966.834	4	686.945	4	-51.586	5
576			min	-5954.414	4	-60.338	4	3.901	5	-966.832	4	-150.492	7	41.946	5	-844.809	4
577		4	max	1778.284	5	8.925	5	51.288	4	132.279	5	1893.513	4	494.911	4	36.971	7
578			min	-5956.435	4	-66.226	4	3.901	5	-1893.509	4	-132.279	5	-30.063	7	-608.644	4
579		5	max	1776.263	5	3.037	5	51.288	4	149.1	5	2867.817	4	452.667	5	215.78	7
580			min	-5958.456	4	-72.114	4	3.901	5	-2867.812	4	-149.1	5	-175.459	7	-556.692	5
581	M59	1	max	-70.281	7	17.59	5	3.2	7	20.116	7	1263.767	4	2832.475	4	160.381	2
582			min	-7882.858	4	-18.57	4	-42.868	4	-1263.765	4	-20.116	7	-130.412	2	-3483.393	4
583		2	max	-71.494	7	11.702	5	3.2	7	57.374	2	1091.053	4	1801.692	4	10.21	5
584			min	-7884.879	4	-24.458	4	-42.868	4	-1091.051	4	-57.374	2	-8.302	5	-2215.73	4
585		3	max	-72.707	7	5.813	5	3.2	7	186.72	5	965.964	4	676.636	4	-11.283	5
586			min	-7886.9	4	-30.346	4	-42.868	4	-965.963	4	-186.72	5	9.175	5	-832.13	4
587		4	max	-73.919	7	-0.075	5	3.2	7	271.933	5	888.501	4	153.939	7	667.408	4
588			min	-7888.921	4	-36.235	4	-42.868	4	-888.5	4	-271.933	5	-542.694	4	-189.315	7
589		5	max	-75.132	7	-5.963	5	3.2	7	309.52	5	858.664	4	121.577	7	2282.883	4
590			min	-7890.942	4	-42.123	4	-42.868	4	-858.662	4	-309.52	5	-1856.296	4	-149.516	7
591	M60	1	max	1732.372	7	20.453	7	51.543	4	761.173	4	241.795	7	815.396	4	689.73	7
592			min	-5946.246	4	-48.94	4	1.748	7	-241.794	7	-761.174	4	-560.845	7	-1002.778	4
593		2	max	1731.159	7	16.92	7	51.543	4	336.159	5	104.791	7	809.92	4	287.384	7
594			min	-5948.267	4	-54.828	4	1.748	7	-104.791	7	-336.16	5	-233.683	7	-996.043	4
595		3	max	1729.947	7	13.387	7	51.543	4	229.995	5	959.551	4	710.17	4	-45.398	7
596			min	-5950.288	4	-60.717	4	1.748	7	-959.55	4	-229.995	5	36.915	7	-873.371	4
597		4	max	1728.734	7	9.854	7	51.543	4	99.955	2	1891.352	4	516.148	4	-63.45	5
598			min	-5952.309	4	-66.605	4	1.748	7	-1891.349	4	-99.955	2	51.593	5	-634.762	4
599		5	max	1727.521	7	6.321	7	51.543	4	134.769	7	2870.779	4	408.419	7	106.527	5
600			min	-5954.33	4	-72.493	4	1.748	7	-2870.774	4	-134.769	7	-86.621	5	-502.276	7
601	M61	1	max	-74.527	7	-7.056	7	13.293	5	773.08	5	964.709	4	2462.085	4	-312.075	7
602			min	-8055.989	4	-32.917	5	-41.859	4	-964.707	4	-773.082	5	253.76	7	-3027.885	4
603		2	max	-76	7	-10.588	7	13.293	5	354.522	2	706.994	4	1516.912	4	-42.888	7
604			min	-8058.443	4	-38.805	5	-41.859	4	-706.992	4	-354.522	2	34.874	7	-1865.506	4
605		3	max	-77.472	7	-14.121	7	13.293	5	150.31	7	500.988	4	469.383	4	365.84	2
606			min	-8060.898	4	-44.693	5	-41.859	4	-500.987	4	-150.31	7	-297.478	2	-577.249	4
607		4	max	-78.945	7	-17.654	7	13.293	5	43.891	7	677.05	5	-587.141	7	1087.303	2
608			min	-8063.352	4	-50.582	5	-41.859	4	-677.049	5	-43.891	7	-884.126	2	722.069	7
609		5	max	-80.418	7	-21.187	7	13.293	5	-93.554	7	1263.846	5	-990.269	7	2376.901	4
610			min	-8065.806	4	-56.47	5	-41.859	4	-1263.844	5	93.554	7	-1932.746	4	1217.838	7
611	M62	1	max	1819.896	5	-16.572	7	8.866	2	716.382	2	180.644	4	1670.099	4	-442.492	5
612			min	-6260.645	4	-27.183	4	-2.729	4	-180.644	4	-716.383	2	359.806	5	-2053.896	4
613		2	max	1817.442	5	-20.105	7	8.866	2	385.243	2	421.247	4	1098.947	4	-30.544	5
614			min	-6263.099	4	-33.071	4	-2.729	4	-421.247	4	-385.244	2	24.837	5	-1351.49	4
615		3	max	1814.988	5	-23.638	7	8.866	2	130.534	7	713.56	4	425.438	4	507.282	5
616			min	-6265.554	4	-38.959	4	-2.729	4	-713.559	4	-130.535	7	-412.49	5	-523.206	4
617		4	max	1812.533	5	-27.171	7	8.866	2	-142.177	7	1057.582	4	-350.427	4	1170.987	5
618			min	-6268.008	4	-44.848	4	-2.729	4	-1057.58	4	142.177	7	-952.173	5	430.957	4
619		5	max	1810.079	5	-30.704	7	8.866	2	-445.914	7	1453.313	4	-813.688	7	1960.57	5

Envelope Member Section Stresses (Continued)

	Member	Sec		Axial[psi]	LC	y Shear[psi]	LC	z Shear[psi]	LC	y-Top[psi]	LC	y-Bot[psi]	LC	z-Top[psi]	LC	z-Bot[psi]	LC
620			min	-6270.462	4	-50.736	4	-2.729	4	-1453.31	4	445.914	7	-1594.212	5	1000.678	7
621	M63	1	max	-131.87	5	-8.471	4	9.64	7	651.891	2	960.102	4	2459.887	4	-540.996	7
622			min	-8049.653	4	-23.767	2	-42.536	4	-960.101	4	-651.892	2	439.904	7	-3025.181	4
623		2	max	-134.324	5	-14.359	4	9.64	7	405.11	5	686.796	4	1522.04	4	-123.841	5
624			min	-8052.107	4	-29.655	2	-42.536	4	-686.795	4	-405.111	5	100.7	5	-1871.812	4
625		3	max	-136.779	5	-20.247	4	9.64	7	193.413	5	465.199	4	481.836	4	447.052	5
626			min	-8054.562	4	-35.543	2	-42.536	4	-465.199	4	-193.414	5	-363.515	5	-592.565	4
627		4	max	-139.233	5	-26.135	4	9.64	7	-69.993	5	481.282	7	-452.906	7	1143.825	5
628			min	-8057.016	4	-41.432	2	-42.536	4	-481.281	7	69.993	5	-930.086	5	556.986	7
629		5	max	-141.687	5	-32.023	4	9.64	7	-177.133	4	862.993	7	-873.337	7	2343.567	4
630			min	-8059.47	4	-47.32	2	-42.536	4	-862.992	7	177.133	4	-1905.641	4	1074.034	7
631	M64	1	max	1790.773	7	-14.524	7	10.925	5	940.117	5	142.016	4	1689.097	4	-222.522	7
632			min	-6264.18	4	-28.807	6	-1.618	4	-142.016	4	-940.119	5	180.941	7	-2077.26	4
633		2	max	1789.301	7	-18.057	7	10.925	5	565.769	5	402.202	4	1117.798	4	17.927	7
634			min	-6266.635	4	-34.695	6	-1.618	4	-402.201	4	-565.77	5	-14.577	7	-1374.674	4
635		3	max	1787.828	7	-21.59	7	10.925	5	139.713	5	714.097	4	444.142	4	344.221	2
636			min	-6269.089	4	-40.583	6	-1.618	4	-714.096	4	-139.713	5	-279.899	2	-546.209	4
637		4	max	1786.355	7	-25.123	7	10.925	5	-338.053	5	1077.702	4	-331.87	4	1023.937	2
638			min	-6271.543	4	-46.471	6	-1.618	4	-1077.7	4	338.054	5	-832.601	2	408.135	4
639		5	max	1784.883	7	-28.656	7	10.925	5	-665.434	7	1493.016	4	-969.614	7	1829.532	2
640			min	-6273.997	4	-52.359	6	-1.618	4	-1493.013	4	665.436	7	-1487.66	2	1192.437	7
641	M65	1	max	-5.196	7	101.513	4	-37.272	5	-2042.251	7	3701.468	4	-329.76	5	571.128	4
642			min	-6686.221	4	53.113	5	-75.316	4	-3701.461	4	2042.255	7	-464.405	4	405.54	5
643		2	max	-6.409	7	95.625	4	-37.272	5	-1163.895	7	2295.027	4	-92.107	4	228.939	2
644			min	-6688.242	4	47.224	5	-75.316	4	-2295.023	4	1163.897	7	-186.159	2	113.274	4
645		3	max	-7.621	7	89.737	4	-37.272	5	-314.113	7	936.212	4	185.918	4	93.204	7
646			min	-6690.263	4	41.336	5	-75.316	4	-936.21	4	314.114	7	-75.787	7	-228.643	4
647		4	max	-8.834	7	83.849	4	-37.272	5	507.093	7	76.215	5	369.67	4	41.133	7
648			min	-6692.284	4	35.448	5	-75.316	4	-76.214	5	-507.094	7	-33.447	7	-454.622	4
649		5	max	-10.047	7	77.961	4	-37.272	5	1638.539	4	-488.156	5	459.149	4	90.172	2
650			min	-6694.305	4	29.56	5	-75.316	4	488.155	5	-1638.542	4	-73.322	2	-564.664	4
651	M66	1	max	1526.147	5	91.518	4	-28.858	7	-1392.43	7	3403.449	4	-347.079	5	752.909	4
652			min	-5339.647	4	44.951	7	-61.738	4	-3403.442	4	1392.432	7	-612.218	4	426.84	5
653		2	max	1524.126	5	85.629	4	-28.858	7	-809.733	7	2187.678	4	-153.057	7	261.128	2
654			min	-5341.668	4	41.418	7	-61.738	4	-2187.674	4	809.734	7	-212.333	2	188.23	7
655		3	max	1522.105	5	79.741	4	-28.858	7	-255.611	7	1019.534	4	152.807	4	148.393	5
656			min	-5343.689	4	37.885	7	-61.738	4	-1019.532	4	255.611	7	-120.664	5	-187.923	4
657		4	max	1520.084	5	73.853	4	-28.858	7	269.935	7	-100.985	4	393.91	4	183.076	5
658			min	-5345.71	4	34.352	7	-61.738	4	100.985	4	-269.936	7	-148.866	5	-484.432	4
659		5	max	1518.063	5	67.965	4	-28.858	7	1173.877	4	-766.908	7	540.739	4	333.696	5
660			min	-5347.731	4	30.819	7	-61.738	4	766.907	7	-1173.879	4	-271.341	5	-665.004	4
661	M67	1	max	-63.377	5	103.245	4	-16.577	7	-1069.517	7	3707.152	4	-198.515	7	646.19	6
662			min	-6665.728	4	26.785	7	-75.755	4	-3707.145	4	1069.519	7	-525.441	6	244.135	7
663		2	max	-65.398	5	97.357	4	-16.577	7	-733.084	7	2283.152	4	-63.362	7	324.957	5
664			min	-6667.749	4	23.252	7	-75.755	4	-2283.147	4	733.086	7	-264.234	5	77.923	7
665		3	max	-67.419	5	91.469	4	-16.577	7	-425.227	7	906.777	4	187.886	4	121.82	5
666			min	-6669.77	4	19.719	7	-75.755	4	-906.775	4	425.228	7	-99.057	5	-231.063	4
667		4	max	-69.441	5	85.581	4	-16.577	7	650.977	5	145.945	7	392.343	4	34.622	5
668			min	-6671.791	4	16.186	7	-75.755	4	-145.945	7	-650.978	5	-28.152	5	-482.505	4
669		5	max	-71.462	5	79.693	4	-16.577	7	1830.066	6	-104.762	7	502.527	4	63.361	5
670			min	-6673.812	4	12.653	7	-75.755	4	104.762	7	-1830.07	6	-51.521	5	-618.011	4
671	M68	1	max	1521.547	7	89.03	4	-34.457	7	-1645.333	7	3312.947	4	-163.249	7	727.059	4
672			min	-5352.95	4	40.516	7	-59.398	4	-3312.941	4	1645.336	7	-591.198	4	200.764	7
673		2	max	1520.334	7	83.142	4	-34.457	7	-1053.213	7	2136.225	4	-94.525	7	265.238	5
674			min	-5354.971	4	36.983	7	-59.398	4	-2136.221	4	1053.215	7	-215.675	5	116.248	7

Envelope Member Section Stresses (Continued)

	Member	Sec		Axial[psi]	LC	y Shear[psi]	LC	z Shear[psi]	LC	y-Top[psi]	LC	y-Bot[psi]	LC	z-Top[psi]	LC	z-Bot[psi]	LC
675		3	max	1519.121	7	77.254	4	-34.457	7	-487.238	5	1007.129	4	169.11	4	101.294	7
676			min	-5356.992	4	33.45	7	-59.398	4	-1007.127	4	487.239	5	-82.366	7	-207.973	4
677		4	max	1517.909	7	71.366	4	-34.457	7	343.689	5	-45.302	7	407.855	4	155.902	7
678			min	-5359.013	4	29.917	7	-59.398	4	45.302	7	-343.69	5	-126.77	7	-501.582	4
679		5	max	1516.696	7	65.477	4	-34.457	7	1129.042	6	-551.698	7	552.327	4	280.073	7
680			min	-5361.034	4	26.384	7	-59.398	4	551.697	7	-1129.044	6	-227.738	7	-679.254	4
681	M69	1	max	0.003	4	0	7	0	7	0	7	0	7	0	7	0	7
682			min	0	7	0	2	0	2	0	2	0	2	0	2	0	2
683		2	max	0.003	4	0	7	0	7	0	7	0	7	0	7	0	7
684			min	0	7	0	2	0	2	0	2	0	2	0	2	0	2
685		3	max	0.003	4	0	7	0	7	0	7	0	7	0	7	0	7
686			min	0	7	0	2	0	2	0	2	0	2	0	2	0	2
687		4	max	0.003	4	0	7	0	7	0	7	0	7	0	7	0	7
688			min	0	7	0	2	0	2	0	2	0	2	0	2	0	2
689		5	max	0.003	4	0	7	0	7	0	7	0	7	0	7	0	7
690			min	0	7	0	2	0	2	0	2	0	2	0	2	0	2
691	M70	1	max	0.003	4	0	7	0	7	0	7	0	7	0	7	0	7
692			min	-0.001	5	0	2	0	2	0	2	0	2	0	2	0	2
693		2	max	0.003	4	0	7	0	7	0	7	0	7	0	7	0	7
694			min	-0.001	5	0	2	0	2	0	2	0	2	0	2	0	2
695		3	max	0.003	4	0	7	0	7	0	7	0	7	0	7	0	7
696			min	-0.001	5	0	2	0	2	0	2	0	2	0	2	0	2
697		4	max	0.003	4	0	7	0	7	0	7	0	7	0	7	0	7
698			min	-0.001	5	0	2	0	2	0	2	0	2	0	2	0	2
699		5	max	0.003	4	0	7	0	7	0	7	0	7	0	7	0	7
700			min	-0.001	5	0	2	0	2	0	2	0	2	0	2	0	2
701	M71	1	max	0.003	4	0	7	0	7	0	7	0	7	0	7	0	7
702			min	0	5	0	2	0	2	0	2	0	2	0	2	0	2
703		2	max	0.003	4	0	7	0	7	0	7	0	7	0	7	0	7
704			min	0	5	0	2	0	2	0	2	0	2	0	2	0	2
705		3	max	0.003	4	0	7	0	7	0	7	0	7	0	7	0	7
706			min	0	5	0	2	0	2	0	2	0	2	0	2	0	2
707		4	max	0.003	4	0	7	0	7	0	7	0	7	0	7	0	7
708			min	0	5	0	2	0	2	0	2	0	2	0	2	0	2
709		5	max	0.003	4	0	7	0	7	0	7	0	7	0	7	0	7
710			min	0	5	0	2	0	2	0	2	0	2	0	2	0	2
711	M72	1	max	0.003	4	0	7	0	7	0	7	0	7	0	7	0	7
712			min	-0.001	7	0	2	0	2	0	2	0	2	0	2	0	2
713		2	max	0.003	4	0	7	0	7	0	7	0	7	0	7	0	7
714			min	-0.001	7	0	2	0	2	0	2	0	2	0	2	0	2
715		3	max	0.003	4	0	7	0	7	0	7	0	7	0	7	0	7
716			min	-0.001	7	0	2	0	2	0	2	0	2	0	2	0	2
717		4	max	0.003	4	0	7	0	7	0	7	0	7	0	7	0	7
718			min	-0.001	7	0	2	0	2	0	2	0	2	0	2	0	2
719		5	max	0.003	4	0	7	0	7	0	7	0	7	0	7	0	7
720			min	-0.001	7	0	2	0	2	0	2	0	2	0	2	0	2
721	M73	1	max	262.99	4	18.935	5	2.298	4	65.266	4	75.346	5	-54.409	7	108.914	5
722			min	147.591	7	11.216	7	-1.12	5	-75.346	5	-65.266	4	-92.14	5	64.314	7
723		2	max	262.99	4	8.048	5	2.298	4	133.052	4	-39.297	7	149.855	4	-99.345	7
724			min	147.591	7	4.212	4	-1.12	5	39.297	7	-133.052	4	84.045	7	-177.135	4
725		3	max	262.99	4	-1.848	7	2.298	4	100.527	4	-57.384	7	169.793	4	-118.643	7
726			min	147.591	7	-6.675	4	-1.12	5	57.384	7	-100.527	4	100.371	7	-200.704	4
727		4	max	262.99	4	-8.38	7	2.298	4	27.613	5	32.309	4	-5.432	7	16.33	4
728			min	147.591	7	-17.561	4	-1.12	5	-32.308	4	-27.613	5	-13.815	4	6.421	7
729		5	max	262.99	4	-14.912	7	2.298	4	-87	7	265.455	4	-233.363	7	473.968	4

Envelope Member Section Stresses (Continued)

	Member	Sec		Axial[psi]	LC	y Shear[psi]	LC	z Shear[psi]	LC	y-Top[psi]	LC	y-Bot[psi]	LC	z-Top[psi]	LC	z-Bot[psi]	LC
730			min	147.591	7	-28.448	4	-1.12	5	-265.455	4	87	7	-400.971	4	275.847	7
731	M74	1	max	820.424	2	17.562	5	6.661	4	133.271	4	25.154	5	-123.2	7	244.129	4
732			min	495.398	7	10.502	7	1.229	7	-25.154	5	-133.271	4	-206.53	4	145.628	7
733		2	max	820.424	2	6.676	5	6.661	4	141.316	4	-41.928	7	58.961	5	-41.442	7
734			min	495.398	7	2.09	4	1.229	7	41.928	7	-141.316	4	35.06	7	-69.695	5
735		3	max	820.424	2	-2.562	7	6.661	4	61.542	2	-37.091	7	120.709	4	-84.151	7
736			min	495.398	7	-8.796	4	1.229	7	37.091	7	-61.542	2	71.191	7	-142.684	4
737		4	max	820.424	2	-9.094	7	6.661	4	-27.933	7	143.527	4	-14.806	7	29.017	2
738			min	495.398	7	-19.683	4	1.229	7	-143.526	4	27.933	7	-24.548	2	17.502	7
739		5	max	820.424	2	-15.626	7	6.661	4	-153.142	7	436.414	4	-222.932	7	439.162	2
740			min	495.398	7	-30.569	4	1.229	7	-436.413	4	153.142	7	-371.526	2	263.517	7
741	M75	1	max	1759.814	2	13.763	2	11.867	4	268.324	4	-33.505	7	-127.071	7	249.477	4
742			min	1061.826	7	7.344	4	3.102	7	33.505	7	-268.324	4	-211.054	4	150.204	7
743		2	max	1759.814	2	2.876	2	11.867	4	176.486	4	-51.32	7	46.363	4	-29.656	7
744			min	1061.826	7	-3.543	4	3.102	7	51.319	7	-176.486	4	25.088	7	-54.803	4
745		3	max	1759.814	2	-4.762	7	11.867	4	13.903	2	15.662	4	100.233	4	-65.153	7
746			min	1061.826	7	-14.429	4	3.102	7	-15.662	4	-13.903	2	55.119	7	-118.481	4
747		4	max	1759.814	2	-11.294	7	11.867	4	-93.611	7	308.122	4	-36.979	7	72.742	2
748			min	1061.826	7	-25.316	4	3.102	7	-308.121	4	93.612	7	-61.539	2	43.711	7
749		5	max	1759.814	2	-17.826	7	11.867	4	-256.356	7	700.892	4	-251.205	7	495.629	5
750			min	1061.826	7	-36.202	4	3.102	7	-700.891	4	256.357	7	-419.297	5	296.936	7
751	M76	1	max	2899.392	2	12.764	2	14.134	4	271.63	4	-22.222	7	-165.964	7	331.277	4
752			min	1747.14	7	6.175	4	4.124	7	22.222	7	-271.631	4	-280.257	4	196.178	7
753		2	max	2899.392	2	1.877	2	14.134	4	148.136	4	-26.057	7	-2.3	4	5.317	2
754			min	1747.14	7	-4.711	4	4.124	7	26.057	7	-148.137	4	-4.498	2	2.719	4
755		3	max	2899.392	2	-5.257	7	14.134	4	-30.295	7	75.668	4	72.109	4	-42.455	7
756			min	1747.14	7	-15.598	4	4.124	7	-75.668	4	30.296	7	35.916	7	-85.236	4
757		4	max	2899.392	2	-11.789	7	14.134	4	-146.834	7	399.784	4	-46.336	7	90.819	2
758			min	1747.14	7	-26.484	4	4.124	7	-399.783	4	146.834	7	-76.832	2	54.771	7
759		5	max	2899.392	2	-18.321	7	14.134	4	-323.559	7	824.211	4	-250.717	7	494.743	5
760			min	1747.14	7	-37.371	4	4.124	7	-824.209	4	323.559	7	-418.547	5	296.36	7
761	M77	1	max	3674.186	2	9.463	2	18.75	4	271.552	4	-3.203	7	-128.494	7	255.611	4
762			min	2207.843	7	-0.54	4	4.35	7	3.203	7	-271.552	4	-222.13	4	147.861	7
763		2	max	3674.186	2	-0.455	7	18.75	4	84.828	4	8.188	7	-19.211	7	33.069	4
764			min	2207.843	7	-11.518	4	4.35	7	-8.188	7	-84.828	4	-28.738	4	22.106	7
765		3	max	3674.186	2	-7.042	7	18.75	4	-69.214	7	184.624	4	-2.243	4	19.167	2
766			min	2207.843	7	-22.496	4	4.35	7	-184.624	4	69.214	7	-16.656	2	2.581	4
767		4	max	3674.186	2	-13.629	7	18.75	4	-179.876	7	536.803	4	-101.059	7	199.634	5
768			min	2207.843	7	-33.474	4	4.35	7	-536.802	4	179.877	7	-173.485	5	116.292	7
769		5	max	3674.186	2	-20.215	7	18.75	4	-340.175	7	971.708	4	-292.191	7	572.307	5
770			min	2207.843	7	-44.452	4	4.35	7	-971.706	4	340.175	7	-497.344	5	336.232	7
771	M78	1	max	5137.329	5	8.507	2	16.238	6	35.34	4	44.601	7	-262.598	7	497.066	2
772			min	3066.068	7	5.228	4	8.633	7	-44.601	7	-35.34	4	-431.958	2	302.179	7
773		2	max	5137.329	5	-0.767	7	16.238	6	-88.47	4	134.943	2	-92.945	7	188.31	4
774			min	3066.068	7	-5.75	4	8.633	7	-134.943	2	88.471	4	-163.644	4	106.954	7
775		3	max	5137.329	5	-7.354	7	16.238	6	-186.28	7	312.361	5	-23.43	7	102.065	4
776			min	3066.068	7	-16.728	4	8.633	7	-312.361	5	186.281	7	-88.696	4	26.962	7
777		4	max	5137.329	5	-13.941	7	16.238	6	-331.574	7	584.338	6	-54.053	7	207.873	4
778			min	3066.068	7	-27.706	4	8.633	7	-584.337	6	331.575	7	-180.645	4	62.201	7
779		5	max	5137.329	5	-20.528	7	16.238	6	-526.504	7	956.265	4	-184.814	7	505.734	4
780			min	3066.068	7	-38.684	4	8.633	7	-956.263	4	526.505	7	-439.491	4	212.671	7
781	M79	1	max	5210.767	5	-3.121	7	123.248	4	-147.82	4	622.218	2	-149.873	7	1165.586	4
782			min	3092.512	7	-24.861	4	5.236	7	-622.217	2	147.821	4	-1012.913	4	172.463	7
783		2	max	5210.767	5	-6.713	7	123.248	4	-453.259	7	768.915	4	-147.227	7	299.612	5
784			min	3092.512	7	-30.849	4	5.236	7	-768.913	4	453.259	7	-260.367	5	169.419	7

Envelope Member Section Stresses (Continued)

	Member	Sec		Axial[psi]	LC	y Shear[psi]	LC	z Shear[psi]	LC	y-Top[psi]	LC	y-Bot[psi]	LC	z-Top[psi]	LC	z-Bot[psi]	LC
785		3	max	5210.767	5	-10.306	7	123.248	4	-509.758	7	1414.622	4	519.511	4	351.013	5
786			min	3092.512	7	-36.837	4	5.236	7	-1414.619	4	509.759	7	-305.036	5	-597.816	4
787		4	max	5210.767	5	-13.899	7	123.248	4	-581.026	7	2084.942	4	1211.24	4	459.555	5
788			min	3092.512	7	-42.825	4	5.236	7	-2084.938	4	581.027	7	-399.36	5	-1393.807	4
789		5	max	5210.767	5	-17.492	7	123.248	4	-667.061	7	2779.874	4	1853.314	4	625.235	5
790			min	3092.512	7	-48.813	4	5.236	7	-2779.869	4	667.062	7	-543.339	5	-2132.659	4
791	M80	1	max	6117.134	4	8.049	7	117.515	4	1421.827	4	193.736	7	-260.263	7	3156.089	4
792			min	3153.93	7	-14.316	4	2.152	7	-193.736	7	-1421.829	4	-2742.692	4	299.492	7
793		2	max	6117.134	4	4.456	7	117.515	4	867.647	4	176.882	7	-190.57	7	2199.902	4
794			min	3153.93	7	-20.304	4	2.152	7	-176.881	7	-867.648	4	-1911.75	4	219.294	7
795		3	max	6117.134	4	0.863	7	117.515	4	288.854	4	260.274	2	-150.671	7	1300.856	4
796			min	3153.93	7	-26.292	4	2.152	7	-260.273	2	-288.854	4	-1130.465	4	173.381	7
797		4	max	6117.134	4	-2.73	7	117.515	4	-187.476	7	413.57	5	-140.564	7	458.949	4
798			min	3153.93	7	-32.28	4	2.152	7	-413.569	5	187.476	7	-398.834	4	161.751	7
799		5	max	6117.134	4	-6.322	7	117.515	4	-214.925	7	942.572	4	283.142	4	265.82	2
800			min	3153.93	7	-38.268	4	2.152	7	-942.571	4	214.925	7	-231.002	2	-325.819	4
801	M81	1	max	5959.753	4	31.845	2	6.576	5	-340.712	7	558.087	4	-572.619	7	1031.594	2
802			min	3150.371	7	20.116	7	3.871	7	-558.086	4	340.713	7	-896.471	2	658.928	7
803		2	max	5959.753	4	20.867	2	6.576	5	-243.109	7	429.953	4	-258.022	7	456.102	2
804			min	3150.371	7	13.529	7	3.871	7	-429.952	4	243.109	7	-396.36	2	296.913	7
805		3	max	5959.753	4	9.889	2	6.576	5	-195.142	7	384.546	4	-7.776	4	72.663	2
806			min	3150.371	7	5.828	4	3.871	7	-384.545	4	195.142	7	-63.145	2	8.948	4
807		4	max	5959.753	4	0.356	7	6.576	5	-196.811	7	421.865	4	103.173	2	-81.422	7
808			min	3150.371	7	-5.15	4	3.871	7	-421.865	4	196.811	7	70.757	7	-118.724	2
809		5	max	5959.753	4	-6.231	7	6.576	5	-248.116	7	541.912	4	102.594	2	4.008	4
810			min	3150.371	7	-16.128	4	3.871	7	-541.911	4	248.116	7	-3.483	4	-118.058	2
811	M82	1	max	4572.755	4	36.216	2	13.139	4	-123.055	4	587.227	2	-484.965	7	912.308	2
812			min	2336.743	7	22.126	4	0.105	7	-587.226	2	123.055	4	-792.81	2	558.062	7
813		2	max	4572.755	4	25.238	2	13.139	4	-96.695	4	363.483	2	-190.633	7	356.656	2
814			min	2336.743	7	11.148	4	0.105	7	-363.482	2	96.696	4	-309.94	2	219.366	7
815		3	max	4572.755	4	14.26	2	13.139	4	-136.073	7	222.466	2	6.034	2	17.253	4
816			min	2336.743	7	0.17	4	0.105	7	-222.466	2	136.073	7	-14.993	4	-6.944	2
817		4	max	4572.755	4	3.282	2	13.139	4	-91.033	7	292.158	4	155.111	2	-112.33	7
818			min	2336.743	7	-10.808	4	0.105	7	-292.157	4	91.033	7	97.617	7	-178.491	2
819		5	max	4572.755	4	-3.798	7	13.139	4	-95.628	7	513.979	4	137.292	2	-64.271	4
820			min	2336.743	7	-21.786	4	0.105	7	-513.978	4	95.628	7	55.852	4	-157.985	2
821	M83	1	max	3926.385	4	28.988	2	10.756	4	-56.333	4	382.123	2	-446.688	7	872.676	2
822			min	1937.929	7	17.658	7	1.823	7	-382.122	2	56.333	4	-738.274	2	528.007	7
823		2	max	3926.385	4	18.101	2	10.756	4	-22.827	4	195.572	2	-143.516	7	279.412	2
824			min	1937.929	7	8.949	4	1.823	7	-195.572	2	22.827	4	-236.38	2	169.643	7
825		3	max	3926.385	4	7.215	2	10.756	4	-66.147	7	109.333	2	61.967	2	-44.359	7
826			min	1937.929	7	-1.937	4	1.823	7	-109.332	2	66.147	7	37.528	7	-73.248	2
827		4	max	3926.385	4	-1.938	7	10.756	4	-70.702	7	256.748	4	156.766	2	-114	7
828			min	1937.929	7	-12.824	4	1.823	7	-256.747	4	70.702	7	96.443	7	-185.305	2
829		5	max	3926.385	4	-8.47	7	10.756	4	-135.443	7	524.174	4	48.018	2	31.754	4
830			min	1937.929	7	-23.71	4	1.823	7	-524.173	4	135.443	7	-26.864	4	-56.76	2
831	M84	1	max	2578.096	4	29.896	2	8.202	4	-52.96	4	372.735	2	-397.501	7	780.744	2
832			min	1243.801	7	18.029	7	0.569	7	-372.734	2	52.96	4	-660.5	2	469.866	7
833		2	max	2578.096	4	19.01	2	8.202	4	17.133	4	157.017	2	-110.836	7	217.297	2
834			min	1243.801	7	10.366	4	0.569	7	-157.017	2	-17.133	4	-183.831	2	131.014	7
835		3	max	2578.096	4	8.123	2	8.202	4	-13.084	4	41.61	2	89.291	2	-63.477	7
836			min	1243.801	7	-0.521	4	0.569	7	-41.61	2	13.084	4	53.701	7	-105.547	2
837		4	max	2578.096	4	-1.566	7	8.202	4	-15.244	7	143.612	4	158.866	2	-113.606	7
838			min	1243.801	7	-11.407	4	0.569	7	-143.612	4	15.244	7	96.109	7	-187.787	2
839		5	max	2578.096	4	-8.098	7	8.202	4	-65.009	7	374.451	4	24.893	2	42.768	4

Envelope Member Section Stresses (Continued)

	Member	Sec		Axial[psi]	LC	y Shear[psi]	LC	z Shear[psi]	LC	y-Top[psi]	LC	y-Bot[psi]	LC	z-Top[psi]	LC	z-Bot[psi]	LC
840			min	1243.801	7	-22.294	4	0.569	7	-374.45	4	65.009	7	-36.181	4	-29.425	2
841	M85	1	max	1335.027	4	28.407	5	5.088	4	-72.038	4	291.456	5	-318.213	7	628.661	5
842			min	624.078	7	17.005	7	0.021	5	-291.455	5	72.038	4	-531.84	5	376.144	7
843		2	max	1335.027	4	17.521	5	5.088	4	35.369	4	80.053	5	-60.672	7	120.674	5
844			min	624.078	7	10.473	7	0.021	5	-80.053	5	-35.369	4	-102.089	5	71.717	7
845		3	max	1335.027	4	6.634	5	5.088	4	42.465	4	-18.369	7	124.286	2	-88.347	7
846			min	624.078	7	0.414	4	0.021	5	18.369	7	-42.465	4	74.741	7	-146.912	2
847		4	max	1335.027	4	-2.591	7	5.088	4	41.821	5	50.749	4	146.77	5	-104.05	7
848			min	624.078	7	-10.472	4	0.021	5	-50.749	4	-41.821	5	88.025	7	-173.49	5
849		5	max	1335.027	4	-9.123	7	5.088	4	-30.031	7	244.275	4	-20.818	7	92.762	4
850			min	624.078	7	-21.359	4	0.021	5	-244.274	4	30.031	7	-78.476	4	24.608	7
851	M86	1	max	447.885	4	31.583	5	1.01	4	-165.693	4	322.894	5	-297.586	7	589.058	5
852			min	200.596	7	18.786	7	-2.887	5	-322.893	5	165.693	4	-498.337	5	351.761	7
853		2	max	447.885	4	20.696	5	1.01	4	19.783	4	55.435	5	-37.453	7	75.165	5
854			min	200.596	7	12.254	7	-2.887	5	-55.434	5	-19.783	4	-63.589	5	44.271	7
855		3	max	447.885	4	9.81	5	1.01	4	111.714	5	-66.024	7	169.56	4	-118.857	7
856			min	200.596	7	4.809	4	-2.887	5	66.023	7	-111.714	5	100.552	7	-200.429	4
857		4	max	447.885	4	-0.81	7	1.01	4	178.552	5	-89.804	4	195.264	5	-137.623	7
858			min	200.596	7	-6.077	4	-2.887	5	89.804	4	-178.552	5	116.428	7	-230.811	5
859		5	max	447.885	4	-7.342	7	1.01	4	145.079	5	25.652	4	19.369	5	23.551	4
860			min	200.596	7	-16.964	4	-2.887	5	-25.652	4	-145.079	5	-19.924	4	-22.895	5
861	M87	1	max	2.459	4	3.122	5	-13.775	7	-53.844	4	186.608	5	158.666	4	-109.033	7
862			min	1.53	7	-0.606	4	-23.205	5	-186.607	5	53.844	4	92.241	7	-187.551	4
863		2	max	2.459	4	3.122	5	-7.243	7	72.751	4	-5.821	5	-72.147	7	142.868	4
864			min	1.53	7	-0.606	4	-12.318	5	5.821	5	-72.751	4	-120.865	4	85.281	7
865		3	max	2.459	4	3.122	5	1.985	4	99.034	4	-59.785	7	-114.406	7	232.686	4
866			min	1.53	7	-0.606	4	-1.432	5	59.785	7	-99.034	4	-196.849	4	135.234	7
867		4	max	2.459	4	3.122	5	12.872	4	89.744	5	-25.006	4	-34.538	7	81.901	4
868			min	1.53	7	-0.606	4	5.821	7	25.006	4	-89.744	5	-69.287	4	40.826	7
869		5	max	2.459	4	3.122	5	23.758	4	-15.835	7	149.333	4	280.11	5	-197.944	7
870			min	1.53	7	-0.606	4	12.352	7	-149.332	4	15.835	7	167.458	7	-331.104	5
871	M88	1	max	-134.564	7	-0.059	5	-13.829	7	-28.53	4	178.63	5	368.597	4	-240.384	7
872			min	-273.707	4	-4.842	4	-23.106	5	-178.63	5	28.53	4	203.362	7	-435.699	4
873		2	max	-134.564	7	-0.059	5	-7.297	7	53.553	4	16.43	5	20.984	4	-5.102	7
874			min	-273.707	4	-4.842	4	-12.219	5	-16.43	5	-53.553	4	4.316	7	-24.805	4
875		3	max	-134.564	7	-0.059	5	2.58	4	45.661	2	-27.615	7	-72.601	7	145.488	4
876			min	-273.707	4	-4.842	4	-1.333	5	27.615	7	-45.661	2	-123.081	4	85.818	7
877		4	max	-134.564	7	-0.059	5	13.466	4	7.038	5	83.214	4	-27.391	7	75.178	4
878			min	-273.707	4	-4.842	4	5.767	7	-83.214	4	-7.038	5	-63.6	4	32.377	7
879		5	max	-134.564	7	-0.059	5	24.353	4	-80.175	7	302.064	4	233.42	5	-165.425	7
880			min	-273.707	4	-4.842	4	12.298	7	-302.064	4	80.175	7	139.947	7	-275.914	5
881	M89	1	max	-483.564	7	-2.072	7	-11.605	7	134.074	4	78.607	2	395.757	4	-243.232	7
882			min	-996.647	4	-9.816	4	-19.294	2	-78.607	2	-134.074	4	205.771	7	-467.805	4
883		2	max	-483.564	7	-2.072	7	-3.459	4	125.656	4	-9.979	7	45.792	4	-13.145	7
884			min	-996.647	4	-9.816	4	-8.408	2	9.979	7	-125.656	4	11.121	7	-54.128	4
885		3	max	-483.564	7	-2.072	7	7.428	4	16.926	4	-7.544	7	-61.402	7	122.914	5
886			min	-996.647	4	-9.816	4	1.459	7	7.544	7	-16.926	4	-103.983	5	72.58	7
887		4	max	-483.564	7	-2.072	7	18.314	4	-55.078	7	192.115	4	-11.797	7	51.42	4
888			min	-996.647	4	-9.816	4	7.991	7	-192.114	4	55.078	7	-43.5	4	13.945	7
889		5	max	-483.564	7	-2.072	7	29.201	4	-177.887	7	501.466	4	265.126	2	-189.052	7
890			min	-996.647	4	-9.816	4	14.523	7	-501.465	4	177.887	7	159.936	7	-313.392	2
891	M90	1	max	-1059.397	7	-2.545	7	-8.995	4	215.92	4	97.508	2	445.911	4	-273.494	7
892			min	-2230.187	4	-13.905	4	-17.45	2	-97.508	2	-215.92	4	231.373	7	-527.089	4
893		2	max	-1059.397	7	-2.545	7	1.892	4	120.52	4	29.838	2	119.53	4	-53.065	7
894			min	-2230.187	4	-13.905	4	-6.564	2	-29.838	2	-120.52	4	44.893	7	-141.291	4

Envelope Member Section Stresses (Continued)

	Member	Sec		Axial[psi]	LC	y Shear[psi]	LC	z Shear[psi]	LC	y-Top[psi]	LC	y-Bot[psi]	LC	z-Top[psi]	LC	z-Bot[psi]	LC
895		3	max	-1059.397	7	-2.545	7	12.778	4	-35.078	7	75.191	4	-3.304	4	42.07	5
896			min	-2230.187	4	-13.905	4	2.369	7	-75.191	4	35.078	7	-35.591	5	3.905	4
897		4	max	-1059.397	7	-2.545	7	23.665	4	-110.456	7	371.214	4	77.409	4	-45.291	7
898			min	-2230.187	4	-13.905	4	8.901	7	-371.213	4	110.456	7	38.316	7	-91.501	4
899		5	max	-1059.397	7	-2.545	7	34.552	4	-246.021	7	767.547	4	361.667	4	-257.946	7
900			min	-2230.187	4	-13.905	4	15.433	7	-767.546	4	246.021	7	218.22	7	-427.509	4
901	M91	1	max	-1451.648	7	19.915	2	-1.488	7	-160.835	7	372.458	4	84.733	4	205.603	2
902			min	-3176.541	4	12.153	7	-8.278	4	-372.458	4	160.835	7	-178.673	2	-97.505	4
903		2	max	-1451.648	7	8.937	2	-1.488	7	-82.86	7	216.892	4	146.871	4	10.15	7
904			min	-3176.541	4	5.566	7	-8.278	4	-216.892	4	82.86	7	-8.821	7	-169.009	4
905		3	max	-1451.648	7	-1.021	7	-1.488	7	-54.521	7	144.053	4	42.113	4	1.542	5
906			min	-3176.541	4	-4.101	4	-8.278	4	-144.052	4	54.522	7	-1.34	5	-48.46	4
907		4	max	-1451.648	7	-7.608	7	-1.488	7	-75.819	7	153.94	4	-85.109	7	264.141	4
908			min	-3176.541	4	-15.079	4	-8.278	4	-153.94	4	75.819	7	-229.542	4	97.938	7
909		5	max	-1451.648	7	-14.195	7	-1.488	7	-146.752	7	246.555	4	-273.461	7	768.794	4
910			min	-3176.541	4	-26.057	4	-8.278	4	-246.554	4	146.753	7	-668.094	4	314.679	7
911	M92	1	max	-2224.476	7	-8.144	7	-1.26	4	384.292	4	21.454	7	714.895	4	-339.509	7
912			min	-5026.815	4	-27.886	4	-9.139	2	-21.454	7	-384.292	4	295.039	7	-822.649	4
913		2	max	-2224.476	7	-8.144	7	9.718	4	142.286	4	83.258	2	355.245	4	-157.591	7
914			min	-5026.815	4	-27.886	4	1.038	7	-83.258	2	-142.287	4	136.949	7	-408.79	4
915		3	max	-2224.476	7	-8.144	7	20.696	4	-159.836	7	244.46	2	162.491	4	-90.904	7
916			min	-5026.815	4	-27.886	4	7.625	7	-244.459	2	159.836	7	78.997	7	-186.982	4
917		4	max	-2224.476	7	-8.144	7	31.674	4	-303.481	7	589.906	4	190.186	2	-139.447	7
918			min	-5026.815	4	-27.886	4	14.212	7	-589.905	4	303.482	7	121.182	7	-218.852	2
919		5	max	-2224.476	7	-8.144	7	42.652	4	-496.763	7	1080.094	4	421.585	2	-303.222	7
920			min	-5026.815	4	-27.886	4	20.799	7	-1080.092	4	496.764	7	263.505	7	-485.129	2
921	M93	1	max	-3785.309	7	10.842	4	113.675	4	631.673	4	-51.811	7	79.269	5	1068.014	4
922			min	-8687.928	4	-56.355	5	35.667	7	51.81	7	-631.675	4	-928.121	4	-91.217	5
923		2	max	-3785.309	7	10.842	4	119.663	4	196.683	4	396.579	5	148.31	5	-86.549	7
924			min	-8687.928	4	-56.355	5	39.26	7	-396.578	5	-196.683	4	75.213	7	-170.664	5
925		3	max	-3785.309	7	10.842	4	125.651	4	-262.921	4	918.696	5	1236.279	4	-199.991	7
926			min	-8687.928	4	-56.355	5	42.853	7	-918.694	5	262.921	4	173.795	7	-1422.619	4
927		4	max	-3785.309	7	10.842	4	131.639	4	-747.138	4	1465.425	5	2392.961	4	-347.716	7
928			min	-8687.928	4	-56.355	5	46.446	7	-1465.422	5	747.139	4	302.17	7	-2753.645	4
929		5	max	-3785.309	7	10.842	4	137.627	4	-1132.321	7	2036.768	5	3599.299	4	-529.724	7
930			min	-8687.928	4	-56.355	5	50.038	7	-2036.764	5	1132.323	7	460.339	7	-4141.81	4
931	M94	1	max	-3544.854	4	17.616	4	75.78	4	60.145	5	435.316	4	1094.703	2	2714.272	4
932			min	-6006.99	2	-40.869	5	-25.2	7	-435.316	4	-60.145	5	-2358.745	4	-1259.705	2
933		2	max	-3544.854	4	17.616	4	81.768	4	-113.768	5	686.699	4	704.994	2	1794.482	4
934			min	-6006.99	2	-40.869	5	-21.607	7	-686.697	4	113.769	5	-1559.433	4	-811.256	2
935		3	max	-3544.854	4	17.616	4	87.756	4	-309.899	7	962.694	4	364.941	2	817.553	4
936			min	-6006.99	2	-40.869	5	-18.014	7	-962.692	4	309.899	7	-710.467	4	-419.947	2
937		4	max	-3544.854	4	17.616	4	93.744	4	-294.365	7	1263.303	4	188.155	4	-9.754	7
938			min	-6006.99	2	-40.869	5	-14.422	7	-1263.3	4	294.366	7	8.477	7	-216.516	4
939		5	max	-3544.854	4	17.616	4	99.732	4	-293.6	7	1588.524	4	1136.432	4	229.419	7
940			min	-6006.99	2	-40.869	5	-10.829	7	-1588.521	4	293.601	7	-199.369	7	-1307.723	4
941	M95	1	max	-2159.598	4	-1.546	7	-18.075	7	-369.268	7	655.236	5	952.321	4	-501.439	7
942			min	-3871.405	5	-13.314	4	-30.663	5	-655.235	5	369.269	7	435.758	7	-1095.861	4
943		2	max	-2159.598	4	-1.546	7	-11.488	7	-269.526	7	487.588	5	441.517	4	-215.802	7
944			min	-3871.405	5	-13.314	4	-19.685	5	-487.587	5	269.527	7	187.536	7	-508.065	4
945		3	max	-2159.598	4	-1.546	7	-3.819	4	-219.421	7	456.602	4	97.609	4	-45.397	7
946			min	-3871.405	5	-13.314	4	-8.707	5	-456.601	4	219.421	7	39.45	7	-112.321	4
947		4	max	-2159.598	4	-1.546	7	7.159	4	-218.951	7	569.518	4	-7.398	5	91.372	4
948			min	-3871.405	5	-13.314	4	1.685	7	-569.517	4	218.951	7	-79.403	4	8.513	5
949		5	max	-2159.598	4	-1.546	7	18.137	4	-268.118	7	765.16	4	68.603	2	103.012	4

Envelope Member Section Stresses (Continued)

	Member	Sec		Axial[psi]	LC	y Shear[psi]	LC	z Shear[psi]	LC	y-Top[psi]	LC	y-Bot[psi]	LC	z-Top[psi]	LC	z-Bot[psi]	LC
950			min	-3871.405	5	-13.314	4	8.272	7	-765.159	4	268.118	7	-89.519	4	-78.943	2
951	M96	1	max	-1598.133	7	-1.308	7	-16.297	4	-156.716	4	380.347	2	584.161	2	-409.638	7
952			min	-2692.331	5	-11.749	4	-27.049	2	-380.346	2	156.716	4	355.982	7	-672.209	2
953		2	max	-1598.133	7	-1.308	7	-5.319	4	-163.8	4	244.14	2	203.388	2	-130.33	4
954			min	-2692.331	5	-11.749	4	-16.071	2	-244.14	2	163.8	4	113.259	4	-234.044	2
955		3	max	-1598.133	7	-1.308	7	5.659	4	-120.388	7	253.611	4	-6.242	7	72.236	4
956			min	-2692.331	5	-11.749	4	-5.093	2	-253.61	4	120.389	7	-62.774	4	7.183	7
957		4	max	-1598.133	7	-1.308	7	16.637	4	-124.781	7	426.149	4	-37.147	7	82.75	4
958			min	-2692.331	5	-11.749	4	2.568	7	-426.148	4	124.781	7	-71.911	4	42.746	7
959		5	max	-1598.133	7	-1.308	7	27.615	4	-178.81	7	681.414	4	85.848	4	-36.921	7
960			min	-2692.331	5	-11.749	4	9.155	7	-681.413	4	178.81	7	32.085	7	-98.787	4
961	M97	1	max	-1246.253	7	-2.327	7	-14.223	7	-21.177	4	267.212	2	570.725	2	-404.916	7
962			min	-2116.036	5	-11.463	4	-23.34	2	-267.211	2	21.177	4	342.554	7	-674.625	2
963		2	max	-1246.253	7	-2.327	7	-4.446	4	-35.676	4	140.992	2	157.969	5	-111.316	7
964			min	-2116.036	5	-11.463	4	-12.454	2	-140.992	2	35.676	4	94.172	7	-186.727	5
965		3	max	-1246.253	7	-2.327	7	6.441	4	-69.752	7	150.486	4	-32.083	7	80.722	4
966			min	-2116.036	5	-11.463	4	-1.567	2	-150.485	4	69.752	7	-68.29	4	37.923	7
967		4	max	-1246.253	7	-2.327	7	17.327	4	-110.604	7	365.606	4	-36.209	7	71.417	4
968			min	-2116.036	5	-11.463	4	5.372	7	-365.606	4	110.604	7	-60.418	4	42.801	7
969		5	max	-1246.253	7	-2.327	7	28.214	4	-211.643	7	681.038	4	151.001	4	-96.683	7
970			min	-2116.036	5	-11.463	4	11.904	7	-681.037	4	211.643	7	81.792	7	-178.49	4
971	M98	1	max	-637.811	7	-0.786	7	-14.9	7	15.33	4	250.302	2	478.33	5	-338.596	7
972			min	-1091.622	5	-8.27	4	-24.688	2	-250.301	2	-15.33	4	286.449	7	-565.41	5
973		2	max	-637.811	7	-0.786	7	-6.252	4	46.892	4	86.33	2	91.502	5	-64.098	7
974			min	-1091.622	5	-8.27	4	-13.801	2	-86.329	2	-46.892	4	54.226	7	-108.16	5
975		3	max	-637.811	7	-0.786	7	4.635	4	-14.553	7	22.669	2	-55.868	7	116.861	4
976			min	-1091.622	5	-8.27	4	-2.915	2	-22.669	2	14.553	7	-98.863	4	66.039	7
977		4	max	-637.811	7	-0.786	7	15.521	4	-34.963	7	190.917	4	-43.835	7	85.203	2
978			min	-1091.622	5	-8.27	4	4.695	7	-190.916	4	34.963	7	-72.081	2	51.815	7
979		5	max	-637.811	7	-0.786	7	26.408	4	-115.56	7	460.288	4	172.308	4	-106.77	7
980			min	-1091.622	5	-8.27	4	11.227	7	-460.287	4	115.56	7	90.326	7	-203.677	4
981	M99	1	max	-220.756	7	-0.009	5	-14.195	7	1.561	4	196.615	5	366.338	5	-259.053	7
982			min	-382.664	5	-4.977	4	-23.729	5	-196.614	5	-1.561	4	219.156	7	-433.03	5
983		2	max	-220.756	7	-0.009	5	-7.42	4	74.227	4	28.201	5	24.282	5	-16.592	7
984			min	-382.664	5	-4.977	4	-12.843	5	-28.201	5	-74.227	4	14.037	7	-28.703	5
985		3	max	-220.756	7	-0.009	5	3.467	4	46.582	4	-23.697	7	-68.954	7	136.106	4
986			min	-382.664	5	-4.977	4	-1.956	5	23.697	7	-46.582	4	-115.144	4	81.507	7
987		4	max	-220.756	7	-0.009	5	14.353	4	7.694	5	81.374	4	-29.817	7	58.366	2
988			min	-382.664	5	-4.977	4	5.401	7	-81.374	4	-7.694	5	-49.377	2	35.246	7
989		5	max	-220.756	7	-0.009	5	25.24	4	-76.597	7	309.642	4	235.479	4	-155.377	7
990			min	-382.664	5	-4.977	4	11.933	7	-309.641	4	76.597	7	131.447	7	-278.348	4
991	M100	1	max	2.446	4	2.665	5	-17.09	7	-87.439	4	247.297	5	374.391	5	-265.013	7
992			min	-29.353	5	-1.388	4	-28.759	5	-247.297	5	87.439	4	224.198	7	-442.548	5
993		2	max	2.446	4	2.665	5	-10.558	7	72.245	4	7.907	5	-7.17	7	20.051	4
994			min	-29.353	5	-1.388	4	-17.873	5	-7.907	5	-72.245	4	-16.963	4	8.475	7
995		3	max	2.446	4	2.665	5	-2.388	4	131.618	4	-77.932	7	-116.409	7	229.672	5
996			min	-29.353	5	-1.388	4	-6.986	5	77.932	7	-131.618	4	-194.3	5	137.601	7
997		4	max	2.446	4	2.665	5	8.499	4	169.94	5	-90.68	4	-103.52	7	204.879	5
998			min	-29.353	5	-1.388	4	2.505	7	90.68	4	-169.941	5	-173.325	5	122.366	7
999		5	max	2.446	4	2.665	5	19.385	4	108.398	5	50.57	4	76.589	4	-37.23	7
1000			min	-29.353	5	-1.388	4	9.037	7	-50.569	4	-108.398	5	31.496	7	-90.532	4
1001	M101	1	max	-13.373	7	-4.896	7	80.012	4	2018.933	4	-226.708	7	100.862	4	748.189	2
1002			min	-46.692	4	-84.26	4	20.252	7	226.707	7	-2018.937	4	-608.38	2	-124.041	4
1003		2	max	-14.933	7	-4.896	7	80.012	4	970.079	4	-66.14	7	47.173	4	423.665	2
1004			min	-49.291	4	-84.26	4	20.252	7	66.14	7	-970.081	4	-344.498	2	-58.014	4

Envelope Member Section Stresses (Continued)

	Member	Sec		Axial[psi]	LC	y Shear[psi]	LC	z Shear[psi]	LC	y-Top[psi]	LC	y-Bot[psi]	LC	z-Top[psi]	LC	z-Bot[psi]	LC
1005		3	max	-16.492	7	-4.896	7	80.012	4	-78.776	4	121.679	2	-6.516	4	99.141	2
1006			min	-51.89	4	-84.26	4	20.252	7	-121.678	2	78.776	4	-80.615	2	8.013	4
1007		4	max	-18.051	7	-4.896	7	80.012	4	-254.994	7	1127.632	4	183.267	2	74.04	4
1008			min	-54.488	4	-84.26	4	20.252	7	-1127.63	4	254.994	7	-60.205	4	-225.383	2
1009		5	max	-19.611	7	-4.896	7	80.012	4	-415.561	7	2176.489	4	447.15	2	140.067	4
1010			min	-57.087	4	-84.26	4	20.252	7	-2176.485	4	415.561	7	-113.893	4	-549.907	2
1011	M102	1	max	-25.822	4	26.374	2	40.017	4	594.509	4	556.37	7	9.79	7	1070.141	4
1012			min	-37.03	2	-8.456	4	-23.287	7	-556.369	7	-594.51	4	-870.171	4	-12.04	7
1013		2	max	-28.421	4	26.374	2	40.017	4	285.015	4	258.606	7	10.575	7	579.591	4
1014			min	-39.629	2	-8.456	4	-23.287	7	-258.606	7	-285.016	4	-471.287	4	-13.005	7
1015		3	max	-30.108	7	26.374	2	40.017	4	69.899	5	24.478	4	11.36	7	89.04	4
1016			min	-42.228	2	-8.456	4	-23.287	7	-24.478	4	-69.899	5	-72.402	4	-13.971	7
1017		4	max	-31.667	7	26.374	2	40.017	4	357.706	2	333.971	4	326.483	4	-14.936	7
1018			min	-44.827	2	-8.456	4	-23.287	7	-333.971	4	-357.707	2	12.145	7	-401.51	4
1019		5	max	-33.227	7	26.374	2	40.017	4	647.139	2	643.465	4	725.368	4	-15.901	7
1020			min	-47.426	2	-8.456	4	-23.287	7	-643.464	4	-647.14	2	12.93	7	-892.061	4
1021	M103	1	max	1382.066	4	-13.896	7	94.465	4	2716.463	4	-538.498	7	565.698	4	470.032	2
1022			min	667.625	7	-113.488	4	27.458	7	538.497	7	-2716.468	4	-382.201	2	-695.698	4
1023		2	max	1379.467	4	-13.896	7	94.465	4	1388.714	4	-274.459	7	325.268	4	198.803	2
1024			min	666.066	7	-113.488	4	27.458	7	274.458	7	-1388.716	4	-161.654	2	-400.016	4
1025		3	max	1376.868	4	-13.896	7	94.465	4	60.964	4	-10.419	7	84.838	4	-44.502	7
1026			min	664.506	7	-113.488	4	27.458	7	10.419	7	-60.964	4	36.186	7	-104.335	4
1027		4	max	1374.269	4	-13.896	7	94.465	4	-253.62	7	1266.788	4	279.439	2	191.347	4
1028			min	662.947	7	-113.488	4	27.458	7	-1266.786	4	253.62	7	-155.592	4	-343.655	2
1029		5	max	1371.67	4	-13.896	7	94.465	4	-517.659	7	2594.541	4	499.985	2	487.029	4
1030			min	661.387	7	-113.488	4	27.458	7	-2594.536	4	517.66	7	-396.021	4	-614.885	2
1031	M104	1	max	1088.749	2	22.182	2	74.418	4	1252.394	4	236.726	7	-209.3	7	1976.183	4
1032			min	657.506	7	-11.356	4	-7.468	7	-236.726	7	-1252.396	4	-1606.907	4	257.398	7
1033		2	max	1086.15	2	22.182	2	74.418	4	704.742	4	86.345	7	-100.388	7	996.01	4
1034			min	655.946	7	-11.356	4	-7.468	7	-86.344	7	-704.743	4	-809.892	4	123.458	7
1035		3	max	1083.551	2	22.182	2	74.418	4	157.09	4	-64.037	7	17.422	5	15.837	4
1036			min	654.387	7	-11.356	4	-7.468	7	64.037	7	-157.091	4	-12.877	4	-21.426	5
1037		4	max	1080.952	2	22.182	2	74.418	4	259.885	2	390.562	4	784.138	4	-144.421	7
1038			min	652.827	7	-11.356	4	-7.468	7	-390.562	4	-259.885	2	117.434	7	-964.337	4
1039		5	max	1078.353	2	22.182	2	74.418	4	413.764	2	938.215	4	1581.153	4	-278.361	7
1040			min	651.268	7	-11.356	4	-7.468	7	-938.213	4	-413.765	2	226.345	7	-1944.51	4
1041	M105	1	max	1182.302	4	-15.277	7	76.111	4	2405.837	4	-482.874	7	771.019	4	232.982	2
1042			min	595.571	7	-105.936	4	21.643	7	482.873	7	-2405.841	4	-189.446	2	-948.204	4
1043		2	max	1179.703	4	-15.277	7	76.111	4	1243.495	4	-247.146	7	394.064	4	104.715	2
1044			min	594.012	7	-105.936	4	21.643	7	247.145	7	-1243.497	4	-85.147	2	-484.622	4
1045		3	max	1177.104	4	-15.277	7	76.111	4	81.154	4	-11.417	7	19.151	2	-14.67	7
1046			min	592.453	7	-105.936	4	21.643	7	11.417	7	-81.154	4	11.928	7	-23.552	2
1047		4	max	1174.505	4	-15.277	7	76.111	4	-224.311	7	1081.19	4	123.449	2	442.54	4
1048			min	590.893	7	-105.936	4	21.643	7	-1081.188	4	224.311	7	-359.846	4	-151.819	2
1049		5	max	1171.906	4	-15.277	7	76.111	4	-460.039	7	2243.533	4	227.748	2	906.122	4
1050			min	589.334	7	-105.936	4	21.643	7	-2243.529	4	460.04	7	-736.801	4	-280.086	2
1051	M106	1	max	988.752	2	14.25	2	75.046	4	1315.144	4	125.727	7	-169.14	7	1773.009	4
1052			min	593.26	7	-18.952	4	-3.172	7	-125.726	7	-1315.146	4	-1441.699	4	208.009	7
1053		2	max	986.153	2	14.25	2	75.046	4	714.977	4	40.966	7	-81.542	7	901.137	4
1054			min	591.701	7	-18.952	4	-3.172	7	-40.966	7	-714.978	4	-732.747	4	100.281	7
1055		3	max	983.554	2	14.25	2	75.046	4	114.81	4	-43.795	7	9.35	2	29.264	4
1056			min	590.142	7	-18.952	4	-3.172	7	43.795	7	-114.81	4	-23.796	4	-11.499	2
1057		4	max	980.955	2	14.25	2	75.046	4	161.479	2	485.358	4	685.156	4	-115.176	7
1058			min	588.582	7	-18.952	4	-3.172	7	-485.357	4	-161.479	2	93.654	7	-842.609	4
1059		5	max	978.356	2	14.25	2	75.046	4	252.083	2	1085.526	4	1394.108	4	-222.904	7

Envelope Member Section Stresses (Continued)

	Member	Sec		Axial[psi]	LC	y Shear[psi]	LC	z Shear[psi]	LC	y-Top[psi]	LC	y-Bot[psi]	LC	z-Top[psi]	LC	z-Bot[psi]	LC
1060			min	587.023	7	-18.952	4	-3.172	7	-1085.524	4	-252.083	2	181.251	7	-1714.481	4
1061	M107	1	max	847.273	4	-16.555	7	70.057	4	2077.553	4	-483.64	7	631.983	4	166.423	2
1062			min	438.576	7	-91.88	4	21.53	7	483.639	7	-2077.557	4	-135.325	2	-777.216	4
1063		2	max	844.674	4	-16.555	7	70.057	4	1043.608	4	-240.471	7	356.167	4	50.157	2
1064			min	437.017	7	-91.88	4	21.53	7	240.47	7	-1043.61	4	-40.785	2	-438.015	4
1065		3	max	842.075	4	-16.555	7	70.057	4	9.663	4	6.284	5	80.35	4	-39.566	7
1066			min	435.458	7	-91.88	4	21.53	7	-6.284	5	-9.663	4	32.172	7	-98.815	4
1067		4	max	839.476	4	-16.555	7	70.057	4	-245.867	7	1024.284	4	148.296	2	240.386	4
1068			min	433.898	7	-91.88	4	21.53	7	-1024.282	4	245.867	7	-195.467	4	-182.375	2
1069		5	max	836.877	4	-16.555	7	70.057	4	-489.035	7	2058.231	4	242.837	2	579.587	4
1070			min	432.339	7	-91.88	4	21.53	7	-2058.227	4	489.036	7	-471.283	4	-298.642	2
1071	M108	1	max	758.268	5	11.133	2	62.955	4	1066.203	4	59.119	2	-152.497	7	1521.154	4
1072			min	453.432	7	-13.671	4	-0.351	7	-59.119	2	-1066.205	4	-1236.907	4	187.541	7
1073		2	max	755.669	5	11.133	2	62.955	4	576.956	4	5.654	7	-67.433	7	755.143	4
1074			min	451.873	7	-13.671	4	-0.351	7	-5.654	7	-576.957	4	-614.035	4	82.929	7
1075		3	max	753.07	5	11.133	2	62.955	4	87.708	4	-41.796	7	29.36	2	-10.868	4
1076			min	450.314	7	-13.671	4	-0.351	7	41.796	7	-87.708	4	8.837	4	-36.108	2
1077		4	max	750.471	5	11.133	2	62.955	4	132.084	2	401.54	4	631.709	4	-126.295	7
1078			min	448.754	7	-13.671	4	-0.351	7	-401.54	4	-132.084	2	102.695	7	-776.879	4
1079		5	max	747.872	5	11.133	2	62.955	4	195.818	2	890.789	4	1254.581	4	-230.907	7
1080			min	447.195	7	-13.671	4	-0.351	7	-890.787	4	-195.819	2	187.759	7	-1542.89	4
1081	M109	1	max	675.47	4	-12.262	7	51.325	4	1536.792	4	-355.525	7	483.055	4	124.361	2
1082			min	365.942	7	-68.215	4	15.668	7	355.524	7	-1536.795	4	-101.123	2	-594.064	4
1083		2	max	672.871	4	-12.262	7	51.325	4	773.546	4	-177.193	7	269.591	4	36.908	5
1084			min	364.382	7	-68.215	4	15.668	7	177.193	7	-773.548	4	-30.011	5	-331.544	4
1085		3	max	670.272	4	-12.262	7	51.325	4	10.301	4	2.701	5	56.127	4	-30.588	7
1086			min	362.823	7	-68.215	4	15.668	7	-2.701	5	-10.301	4	24.872	7	-69.025	4
1087		4	max	667.673	4	-12.262	7	51.325	4	-179.469	7	752.946	4	112.398	2	193.494	4
1088			min	361.264	7	-68.215	4	15.668	7	-752.945	4	179.469	7	-157.337	4	-138.227	2
1089		5	max	665.075	4	-12.262	7	51.325	4	-357.8	7	1516.193	4	183.571	2	456.013	4
1090			min	359.704	7	-68.215	4	15.668	7	-1516.19	4	357.801	7	-370.801	4	-225.757	2
1091	M110	1	max	657.717	5	11.188	5	43.818	4	728.032	4	153.098	5	-94.181	7	1073.828	4
1092			min	392.821	7	-8.885	4	-3.887	2	-153.097	5	-728.033	4	-873.17	4	115.824	7
1093		2	max	655.118	5	11.188	5	43.818	4	391.527	4	56.853	5	-39.436	7	530.863	4
1094			min	391.262	7	-8.885	4	-3.887	2	-56.853	5	-391.527	4	-431.664	4	48.498	7
1095		3	max	652.519	5	11.188	5	43.818	4	55.022	4	-24.088	7	25.798	5	-12.103	4
1096			min	389.703	7	-8.885	4	-3.887	2	24.088	7	-55.022	4	9.841	4	-31.726	5
1097		4	max	649.92	5	11.188	5	43.818	4	135.805	2	281.484	4	451.347	4	-86.153	7
1098			min	388.143	7	-8.885	4	-3.887	2	-281.483	4	-135.805	2	70.054	7	-555.069	4
1099		5	max	647.321	5	11.188	5	43.818	4	231.952	2	617.99	4	892.853	4	-153.479	7
1100			min	386.584	7	-8.885	4	-3.887	2	-617.988	4	-231.952	2	124.799	7	-1098.035	4
1101	M111	1	max	392.602	4	-5.015	7	33.466	4	942.161	4	-170.085	7	257.515	4	193.036	5
1102			min	218.77	7	-41.744	4	9.365	7	170.084	7	-942.163	4	-156.964	5	-316.693	4
1103		2	max	390.003	4	-5.015	7	33.466	4	461.961	4	-78.27	7	152.893	4	72.741	5
1104			min	217.211	7	-41.744	4	9.365	7	78.27	7	-461.961	4	-59.148	5	-188.029	4
1105		3	max	387.404	4	-5.015	7	33.466	4	-13.545	7	23.072	5	48.272	4	-28.886	7
1106			min	215.651	7	-41.744	4	9.365	7	-23.072	5	13.545	7	23.488	7	-59.365	4
1107		4	max	384.805	4	-5.015	7	33.466	4	-105.359	7	498.441	4	136.483	5	69.299	4
1108			min	214.092	7	-41.744	4	9.365	7	-498.44	4	105.359	7	-56.35	4	-167.848	5
1109		5	max	382.206	4	-5.015	7	33.466	4	-197.174	7	978.642	4	234.299	5	197.964	4
1110			min	212.533	7	-41.744	4	9.365	7	-978.641	4	197.174	7	-160.972	4	-288.142	5
1111	M112	1	max	414.319	5	13.451	5	20.017	4	316.696	4	328.833	5	74.157	5	537.029	4
1112			min	247.355	7	-1.71	4	-14.94	5	-328.832	5	-316.697	4	-436.678	4	-91.199	5
1113		2	max	411.72	5	13.451	5	20.017	4	177.968	4	147.559	5	55.34	5	252.489	4
1114			min	245.795	7	-1.71	4	-14.94	5	-147.559	5	-177.968	4	-205.308	4	-68.057	5

Envelope Member Section Stresses (Continued)

	Member	Sec		Axial[psi]	LC	y Shear[psi]	LC	z Shear[psi]	LC	y-Top[psi]	LC	y-Bot[psi]	LC	z-Top[psi]	LC	z-Bot[psi]	LC
1115		3	max	409.121	5	13.451	5	20.017	4	39.239	4	-20.475	7	36.522	5	-26.602	7
1116			min	244.236	7	-1.71	4	-14.94	5	20.475	7	-39.239	4	21.631	7	-44.915	5
1117		4	max	406.522	5	13.451	5	20.017	4	214.988	5	99.489	4	257.432	4	-18.045	7
1118			min	242.676	7	-1.71	4	-14.94	5	-99.489	4	-214.988	5	14.673	7	-316.591	4
1119		5	max	403.923	5	13.451	5	20.017	4	396.261	5	238.218	4	488.802	4	1.37	5
1120			min	241.117	7	-1.71	4	-14.94	5	-238.217	4	-396.262	5	-1.114	5	-601.131	4
1121	M113	1	max	159.387	4	16.297	5	-8.759	4	-68.69	4	417.901	5	327.691	4	-29.218	5
1122			min	92.026	7	-3.46	4	-16.65	5	-417.9	5	68.69	4	23.758	5	-402.996	4
1123		2	max	156.788	4	16.297	5	-8.759	4	-34.855	4	207.537	5	173.259	4	-23.737	5
1124			min	90.467	7	-3.46	4	-16.65	5	-207.537	5	34.855	4	19.301	5	-213.075	4
1125		3	max	154.189	4	16.297	5	-8.759	4	2.827	5	1.02	4	18.827	4	-11.044	7
1126			min	88.908	7	-3.46	4	-16.65	5	-1.02	4	-2.827	5	8.98	7	-23.154	4
1127		4	max	151.59	4	16.297	5	-8.759	4	213.19	5	-32.815	4	10.387	5	166.767	4
1128			min	87.348	7	-3.46	4	-16.65	5	32.815	4	-213.191	5	-135.604	4	-12.774	5
1129		5	max	148.991	4	16.297	5	-8.759	4	423.554	5	-66.65	4	5.93	5	356.688	4
1130			min	85.789	7	-3.46	4	-16.65	5	66.649	4	-423.555	5	-290.036	4	-7.293	5
1131	M114	1	max	174.647	5	-2.623	7	-4.249	4	74.261	4	276.403	5	731.163	5	-458.882	4
1132			min	104.41	7	-10.494	4	-25.103	5	-276.403	5	-74.261	4	373.134	4	-899.188	5
1133		2	max	172.048	5	-2.623	7	-4.249	4	34.388	4	139.943	5	366.757	5	-229.729	4
1134			min	102.851	7	-10.494	4	-25.103	5	-139.943	5	-34.388	4	186.801	4	-451.04	5
1135		3	max	169.449	5	-2.623	7	-4.249	4	-2.246	7	5.485	4	2.351	5	-0.577	4
1136			min	101.292	7	-10.494	4	-25.103	5	-5.485	4	2.246	7	0.469	4	-2.892	5
1137		4	max	166.85	5	-2.623	7	-4.249	4	132.977	5	45.358	4	-185.864	4	445.256	5
1138			min	99.732	7	-10.494	4	-25.103	5	-45.358	4	-132.977	5	-362.055	5	228.576	4
1139		5	max	164.251	5	-2.623	7	-4.249	4	269.437	5	85.231	4	-372.196	4	893.405	5
1140			min	98.173	7	-10.494	4	-25.103	5	-85.231	4	-269.438	5	-726.46	5	457.728	4
1141	M115	1	max	-1468.383	7	20.364	2	10.655	4	265.235	4	87.007	2	-389.227	7	978.965	4
1142			min	-3113.268	4	12.704	7	0.865	7	-87.007	2	-265.235	4	-796.033	4	478.674	7
1143		2	max	-1466.824	7	9.568	2	10.655	4	251.601	4	-36.261	7	-116.571	7	320.467	4
1144			min	-3110.669	4	4.235	4	0.865	7	36.261	7	-251.601	4	-260.584	4	143.359	7
1145		3	max	-1465.264	7	-0.25	7	10.655	4	99.897	2	-64.575	7	-5.064	5	18.282	7
1146			min	-3108.07	4	-6.56	4	0.865	7	64.575	7	-99.897	2	-14.865	7	6.228	5
1147		4	max	-1463.705	7	-6.727	7	10.655	4	6.526	7	207.48	4	-44.444	4	147.26	2
1148			min	-3105.472	4	-17.355	4	0.865	7	-207.48	4	-6.526	7	-119.742	2	54.657	4
1149		5	max	-1462.145	7	-13.204	7	10.655	4	-137.885	7	652.927	4	-324.31	7	629.579	2
1150			min	-3102.873	4	-28.15	4	0.865	7	-652.926	4	137.885	7	-511.934	2	398.838	7
1151	M116	1	max	-1315.571	7	20.91	2	8.848	4	138.258	4	185.349	2	-259.742	7	815.255	4
1152			min	-2669.038	4	12.589	7	-0.1	7	-185.349	2	-138.258	4	-662.914	4	319.432	7
1153		2	max	-1314.011	7	10.115	2	8.848	4	167.594	4	-12.277	7	-15.582	7	169.44	4
1154			min	-2666.439	4	5.651	4	-0.1	7	12.277	7	-167.594	4	-137.778	4	19.162	7
1155		3	max	-1312.452	7	-0.365	7	8.848	4	76.609	2	-51.921	7	102.439	4	-70.87	7
1156			min	-2663.841	4	-5.144	4	-0.1	7	51.921	7	-76.609	2	57.627	7	-125.98	4
1157		4	max	-1310.893	7	-6.842	7	8.848	4	5.203	7	205.545	4	57.736	4	65.629	2
1158			min	-2661.242	4	-15.939	4	-0.1	7	-205.545	4	-5.203	7	-53.365	2	-71.004	4
1159		5	max	-1309.333	7	-13.319	7	8.848	4	-127.877	7	608.021	4	-271.886	4	603.818	2
1160			min	-2658.643	4	-26.734	4	-0.1	7	-608.02	4	127.877	7	-490.987	2	334.367	4
1161	M117	1	max	-991.295	7	20.922	2	8.476	4	61.448	4	125.044	2	-318.648	7	926.396	4
1162			min	-1963.075	4	12.561	7	1.095	7	-125.044	2	-61.448	4	-753.287	4	391.875	7
1163		2	max	-989.736	7	10.127	2	8.476	4	125.353	4	-34.491	7	-43.688	7	220.553	4
1164			min	-1960.476	4	6.084	7	1.095	7	34.491	7	-125.353	4	-179.34	4	53.728	7
1165		3	max	-988.177	7	-0.393	7	8.476	4	92.263	2	-45.321	4	109.688	4	-74.182	7
1166			min	-1957.877	4	-2.923	4	1.095	7	45.321	4	-92.264	2	60.32	7	-134.895	4
1167		4	max	-986.617	7	-6.87	7	8.476	4	-5.193	7	178.649	4	113.797	4	8.146	7
1168			min	-1955.278	4	-13.718	4	1.095	7	-178.649	4	5.193	7	-6.623	7	-139.948	4
1169		5	max	-985.058	7	-13.347	7	8.476	4	-154.579	7	546.556	4	-167.014	4	489.204	2

Envelope Member Section Stresses (Continued)

	Member	Sec		Axial[psi]	LC	y Shear[psi]	LC	z Shear[psi]	LC	y-Top[psi]	LC	y-Bot[psi]	LC	z-Top[psi]	LC	z-Bot[psi]	LC
1170			min	-1952.679	4	-24.513	4	1.095	7	-546.555	4	154.579	7	-397.79	2	205.394	4
1171	M118	1	max	-834.727	7	20.843	2	6.314	4	41.303	4	139.221	5	-251.667	7	673.481	4
1172			min	-1577.916	4	12.508	7	0.609	7	-139.221	5	-41.303	4	-547.632	4	309.501	7
1173		2	max	-833.168	7	10.048	2	6.314	4	129.579	4	-32.247	7	15.74	5	48.688	4
1174			min	-1575.317	4	6.031	7	0.609	7	32.247	7	-129.58	4	-39.59	4	-19.357	5
1175		3	max	-831.609	7	-0.447	7	6.314	4	101.321	2	-61.348	7	183.533	4	-121.554	7
1176			min	-1572.718	4	-3.258	4	0.609	7	61.347	7	-101.321	2	98.84	7	-225.71	4
1177		4	max	-830.049	7	-6.924	7	6.314	4	5.545	2	125.68	4	121.736	4	-21.725	7
1178			min	-1570.119	4	-14.053	4	0.609	7	-125.679	4	-5.545	2	17.666	7	-149.712	4
1179		5	max	-828.49	7	-13.401	7	6.314	4	-139.538	7	469.216	4	-224.98	4	478.216	2
1180			min	-1567.52	4	-24.848	4	0.609	7	-469.215	4	139.538	7	-388.855	2	276.681	4
1181	M119	1	max	-522.967	7	21.003	5	4.147	4	-40.33	4	157.219	5	-222.291	7	573.266	4
1182			min	-965.26	4	12.573	7	0.303	7	-157.219	5	40.33	4	-466.144	4	273.374	7
1183		2	max	-521.408	7	10.208	5	4.147	4	90.973	4	-28.456	7	54.796	5	-15.584	4
1184			min	-962.661	4	6.096	7	0.303	7	28.456	7	-90.973	4	12.672	4	-67.388	5
1185		3	max	-519.848	7	-0.382	7	4.147	4	104.044	2	-62.512	7	206.568	4	-141.998	7
1186			min	-960.062	4	-2.198	4	0.303	7	62.512	7	-104.045	2	115.464	7	-254.039	4
1187		4	max	-518.289	7	-6.859	7	4.147	4	18.658	5	78.234	4	115.545	4	-34.329	7
1188			min	-957.463	4	-12.993	4	0.303	7	-78.234	4	-18.658	5	27.914	7	-142.098	4
1189		5	max	-516.73	7	-13.336	7	4.147	4	-128.465	7	378.743	4	-230.588	7	475.091	5
1190			min	-954.864	4	-23.788	4	0.303	7	-378.743	4	128.465	7	-386.314	5	283.578	7
1191	M120	1	max	-217.929	7	23.148	5	-0.024	4	-143.259	7	243.988	5	-189.188	7	468.496	4
1192			min	-391.387	4	13.868	7	-2.32	5	-243.988	5	143.259	7	-380.951	4	232.665	7
1193		2	max	-216.369	7	12.353	5	-0.024	4	47.896	4	-15.894	7	96.769	5	-69.929	7
1194			min	-388.788	4	7.391	7	-2.32	5	15.894	7	-47.896	4	56.862	7	-119.008	5
1195		3	max	-214.81	7	1.558	5	-0.024	4	147.5	2	-88.684	7	234.71	4	-162.286	7
1196			min	-386.189	4	0.892	4	-2.32	5	88.683	7	-147.5	2	131.961	7	-288.647	4
1197		4	max	-213.251	7	-5.563	7	-0.024	4	127.068	5	-72.319	4	115.161	4	-44.405	7
1198			min	-383.59	4	-9.903	4	-2.32	5	72.319	4	-127.069	5	36.108	7	-141.626	4
1199		5	max	-211.691	7	-12.04	7	-0.024	4	-24.824	7	131.376	4	-230.697	7	480.794	5
1200			min	-380.991	4	-20.698	4	-2.32	5	-131.376	4	24.824	7	-390.951	5	283.712	7
1201	M121	1	max	-264.042	7	19.023	5	2.914	4	51.23	4	37.186	5	-150.54	7	451.653	4
1202			min	-443.02	5	11.403	7	0.38	7	-37.186	5	-51.23	4	-367.256	4	185.135	7
1203		2	max	-265.601	7	8.228	5	2.914	4	189.791	4	-83.857	7	128.736	5	-74.799	4
1204			min	-445.619	5	4.926	7	0.38	7	83.857	7	-189.791	4	60.822	4	-158.32	5
1205		3	max	-267.16	7	-1.551	7	2.914	4	184.414	4	-101.29	7	216.463	5	-159.284	7
1206			min	-448.218	5	-2.887	4	0.38	7	101.29	7	-184.415	4	129.52	7	-266.207	5
1207		4	max	-268.72	7	-8.028	7	2.914	4	56.312	5	-32.36	7	62.218	4	-16.138	7
1208			min	-450.817	5	-13.682	4	0.38	7	32.36	7	-56.312	5	13.122	7	-76.516	4
1209		5	max	-270.279	7	-14.505	7	2.914	4	-122.932	7	258.151	4	-274.227	7	569.204	5
1210			min	-453.416	5	-24.477	4	0.38	7	-258.15	4	122.933	7	-462.841	5	337.246	7
1211	M122	1	max	-578.924	7	19.412	5	5.249	4	57.863	4	82.303	5	-211.911	7	625.655	4
1212			min	-970.699	5	11.632	7	0.979	7	-82.303	5	-57.863	4	-508.743	4	260.61	7
1213		2	max	-580.483	7	8.617	5	5.249	4	162.881	4	-50.898	7	60.026	5	29.222	4
1214			min	-973.298	5	5.155	7	0.979	7	50.898	7	-162.881	4	-23.762	4	-73.82	5
1215		3	max	-582.042	7	-1.322	7	5.249	4	123.962	4	-63.398	7	186.27	2	-137.607	7
1216			min	-975.896	5	-3.067	4	0.979	7	63.398	7	-123.962	4	111.894	7	-229.075	2
1217		4	max	-583.602	7	-7.799	7	5.249	4	-10.464	7	58.895	4	91.443	4	-21.36	7
1218			min	-978.495	5	-13.862	4	0.979	7	-58.895	4	10.464	7	17.369	7	-112.458	4
1219		5	max	-585.161	7	-14.276	7	5.249	4	-170.689	7	385.689	4	-248.108	7	512.054	5
1220			min	-981.094	5	-24.657	4	0.979	7	-385.688	4	170.689	7	-416.37	5	305.124	7
1221	M123	1	max	-871.991	7	18.136	5	8.35	4	130.485	4	60.92	2	-229.253	7	732.79	4
1222			min	-1459.77	5	10.859	7	1.96	7	-60.92	2	-130.485	4	-595.859	4	281.937	7
1223		2	max	-873.55	7	7.341	5	8.35	4	171.888	4	-38.175	7	37.432	2	89.924	4
1224			min	-1462.369	5	4.382	7	1.96	7	38.175	7	-171.888	4	-73.12	4	-46.034	2

Envelope Member Section Stresses (Continued)

	Member	Sec		Axial[psi]	LC	y Shear[psi]	LC	z Shear[psi]	LC	y-Top[psi]	LC	y-Bot[psi]	LC	z-Top[psi]	LC	z-Bot[psi]	LC
1225		3	max	-875.109	7	-2.095	7	8.35	4	69.354	4	-27.289	7	175.136	2	-129.775	7
1226			min	-1464.968	5	-4.737	4	1.96	7	27.288	7	-69.354	4	105.525	7	-215.383	2
1227		4	max	-876.669	7	-8.572	7	8.35	4	-69.961	7	177.118	4	117.599	4	-20.275	7
1228			min	-1467.567	5	-15.532	4	1.96	7	-177.118	4	69.961	7	16.486	7	-144.623	4
1229		5	max	-878.228	7	-15.049	7	8.35	4	-253.572	7	567.528	4	-214.421	4	497.106	2
1230			min	-1470.166	5	-26.327	4	1.96	7	-567.527	4	253.573	7	-404.215	2	263.696	4
1231	M124	1	max	-996.472	7	17.224	2	11.267	4	173.695	4	92.08	2	-231.232	7	807.466	4
1232			min	-1662.715	5	10.359	7	2.385	7	-92.079	2	-173.695	4	-656.58	4	284.37	7
1233		2	max	-998.032	7	6.429	2	11.267	4	149.118	4	-2.021	7	25.372	2	135.865	4
1234			min	-1665.314	5	3.882	7	2.385	7	2.021	7	-149.118	4	-110.476	4	-31.202	2
1235		3	max	-999.591	7	-2.595	7	11.267	4	-19.396	4	33.132	2	163.937	2	-122.489	7
1236			min	-1667.913	5	-6.769	4	2.385	7	-33.131	2	19.396	4	99.6	7	-201.611	2
1237		4	max	-1001.15	7	-9.072	7	11.267	4	-130.766	7	331.848	4	126.973	4	-10.562	7
1238			min	-1670.512	5	-17.564	4	2.385	7	-331.847	4	130.766	7	8.589	7	-156.152	4
1239		5	max	-1002.71	7	-15.549	7	11.267	4	-326.702	7	788.238	4	-181.682	4	508.759	2
1240			min	-1673.111	5	-28.359	4	2.385	7	-788.236	4	326.703	7	-413.691	2	223.433	4
1241	M125	1	max	-1284.897	7	17.507	2	13.375	4	189.614	4	139.598	2	-234.824	7	860.601	4
1242			min	-2135.2	2	10.508	7	2.4	7	-139.598	2	-189.614	4	-699.786	4	288.788	7
1243		2	max	-1286.456	7	6.712	2	13.375	4	126.691	4	38.577	2	20.374	7	145.501	4
1244			min	-2137.799	2	3.258	4	2.4	7	-38.577	2	-126.691	4	-118.312	4	-25.056	7
1245		3	max	-1288.016	7	-2.446	7	13.375	4	-53.786	7	81.494	2	178.243	4	-128.661	7
1246			min	-2140.398	2	-7.537	4	2.4	7	-81.494	2	53.786	7	104.619	7	-219.204	4
1247		4	max	-1289.575	7	-8.923	7	13.375	4	-161.585	7	430.968	4	189.879	4	-22.03	7
1248			min	-2142.997	2	-18.332	4	2.4	7	-430.967	4	161.585	7	17.913	7	-233.514	4
1249		5	max	-1291.134	7	-15.4	7	13.375	4	-355.745	7	925.704	4	-83.405	4	459.628	2
1250			min	-2145.596	2	-29.127	4	2.4	7	-925.702	4	355.746	7	-373.741	2	102.572	4
1251	M126	1	max	-1434.737	7	15.895	2	13.544	4	131.929	4	232.402	2	-209.092	7	655.919	4
1252			min	-2360.115	2	9.838	4	2.093	7	-232.402	2	-131.929	4	-533.352	4	257.142	7
1253		2	max	-1436.296	7	5.1	2	13.544	4	10.55	4	159.315	2	30.065	7	72.158	4
1254			min	-2362.714	2	-0.957	4	2.093	7	-159.315	2	-10.55	4	-58.674	4	-36.974	7
1255		3	max	-1437.855	7	-2.747	7	13.544	4	-137.741	7	254.767	4	150.785	2	-120.853	7
1256			min	-2365.313	2	-11.752	4	2.093	7	-254.766	4	137.741	7	98.27	7	-185.437	2
1257		4	max	-1439.415	7	-9.224	7	13.544	4	-245.45	7	664.021	4	35.923	4	13.352	5
1258			min	-2367.912	2	-22.547	4	2.093	7	-664.02	4	245.45	7	-10.857	5	-44.179	4
1259		5	max	-1440.974	7	-15.701	7	13.544	4	-439.521	7	1217.213	4	-278.174	7	559.417	2
1260			min	-2370.511	2	-33.342	4	2.093	7	-1217.211	4	439.522	7	-454.883	2	342.1	7
1261	M127	1	max	1964.893	4	14.022	5	66.283	4	1780.863	4	811.627	5	-211.017	5	361.164	2
1262			min	973.363	7	-60.381	4	-5.432	5	-811.626	5	-1780.866	4	-313.857	2	242.823	5
1263		2	max	1962.294	4	8.034	5	66.283	4	1027.165	4	715.948	5	-145.391	5	264.148	4
1264			min	971.804	7	-66.369	4	-5.432	5	-715.947	5	-1027.166	4	-229.549	4	167.306	5
1265		3	max	1959.695	4	2.046	5	66.283	4	238.658	4	655.077	5	-100.547	7	305.711	4
1266			min	970.244	7	-72.357	4	-5.432	5	-655.076	5	-238.659	4	-265.668	4	115.703	7
1267		4	max	1957.096	4	-3.942	5	66.283	4	-437.717	7	666.58	2	-68.497	7	428.082	4
1268			min	968.685	7	-78.345	4	-5.432	5	-666.579	2	437.718	7	-372.01	4	78.822	7
1269		5	max	1954.497	4	-9.93	5	66.283	4	-567.948	7	1442.78	4	-78.581	7	631.261	4
1270			min	967.126	7	-84.333	4	-5.432	5	-1442.778	4	567.949	7	-548.576	4	90.426	7
1271	M128	1	max	1160.313	2	15.754	5	69.758	4	435.512	4	264.655	5	-235.991	4	684.846	2
1272			min	704.409	7	-54.897	4	2.971	5	-264.654	5	-435.513	4	-595.142	2	271.561	4
1273		2	max	1162.912	2	9.766	5	69.758	4	-76.328	7	306.508	4	-96.828	4	412.075	2
1274			min	705.968	7	-60.885	4	2.971	5	-306.507	4	76.328	7	-358.099	2	111.423	4
1275		3	max	1165.511	2	3.778	5	69.758	4	-132.703	7	1083.337	4	-27.889	4	220.111	2
1276			min	707.528	7	-66.873	4	2.971	5	-1083.335	4	132.703	7	-191.28	2	32.092	4
1277		4	max	1168.11	2	-2.21	5	69.758	4	-198.367	5	1894.974	4	-7.583	7	165.705	5
1278			min	709.087	7	-72.861	4	2.971	5	-1894.97	4	198.367	5	-144.001	5	8.726	7
1279		5	max	1170.709	2	-7.324	7	69.758	4	-245.886	5	2741.419	4	60.78	7	195.842	5

Envelope Member Section Stresses (Continued)

	Member	Sec		Axial[psi]	LC	y Shear[psi]	LC	z Shear[psi]	LC	y-Top[psi]	LC	y-Bot[psi]	LC	z-Top[psi]	LC	z-Bot[psi]	LC
1280			min	710.646	7	-78.849	4	2.971	5	-2741.413	4	245.887	5	-170.189	5	-69.941	7
1281	M129	1	max	117.867	5	17.186	5	30.827	4	1343.458	4	124.504	5	-106.743	7	1120.874	4
1282			min	-297.92	4	-2.885	4	-0.017	5	-124.504	5	-1343.46	4	-911.424	4	131.273	7
1283		2	max	117.867	5	8.859	5	30.827	4	1001.457	4	6.762	5	4.854	7	598.206	4
1284			min	-297.92	4	-11.212	4	-0.017	5	-6.762	5	-1001.459	4	-486.424	4	-5.97	7
1285		3	max	117.867	5	0.532	5	30.827	4	584.265	4	-10.257	7	40.078	2	258.579	4
1286			min	-297.92	4	-19.54	4	-0.017	5	10.257	7	-584.267	4	-210.26	4	-49.288	2
1287		4	max	117.867	5	-7.795	5	30.827	4	91.883	4	79.286	7	-28.18	5	101.993	4
1288			min	-297.92	4	-27.867	4	-0.017	5	-79.286	7	-91.884	4	-82.934	4	34.656	5
1289		5	max	117.867	5	-14.327	7	30.827	4	-104.68	5	475.69	4	-104.446	4	337.112	2
1290			min	-297.92	4	-36.194	4	-0.017	5	-475.689	4	104.68	5	-274.119	2	128.448	4
1291	M130	1	max	120.35	5	30.485	4	5.296	2	-0.677	7	487.65	4	-343.406	7	881.599	4
1292			min	-660.288	4	12.891	7	-0.571	4	-487.649	4	0.677	7	-716.86	4	422.322	7
1293		2	max	120.35	5	18.188	4	5.296	2	106.719	2	155.54	4	-8.027	7	110.192	4
1294			min	-660.288	4	5.513	7	-0.571	4	-155.539	4	-106.719	2	-89.601	4	9.872	7
1295		3	max	120.35	5	5.892	4	5.296	2	95.65	5	-12.613	4	221.735	5	-163.099	7
1296			min	-660.288	4	-1.893	2	-0.571	4	12.613	4	-95.65	5	132.622	7	-272.691	5
1297		4	max	120.35	5	-6.405	4	5.296	2	16.808	4	84.991	2	191.274	4	-96.592	7
1298			min	-660.288	4	-14.19	2	-0.571	4	-84.991	2	-16.808	4	78.543	7	-235.229	4
1299		5	max	120.35	5	-16.62	7	5.296	2	-142.954	4	426.782	2	-155.111	4	305.052	2
1300			min	-660.288	4	-26.486	2	-0.571	4	-426.781	2	142.955	4	-248.049	2	190.757	4
1301	M131	1	max	57.881	5	34.77	4	0.387	7	-160.358	7	606.846	4	-304.02	7	940.482	4
1302			min	-600.899	4	15.722	7	-3.679	4	-606.845	4	160.358	7	-764.741	4	373.885	7
1303		2	max	57.881	5	22.473	4	0.387	7	-5.074	7	176.169	4	29.911	2	130.861	4
1304			min	-600.899	4	8.344	7	-3.679	4	-176.169	4	5.074	7	-106.408	4	-36.785	2
1305		3	max	57.881	5	10.177	4	0.387	7	90.551	4	-51.835	7	261.354	2	-192.873	7
1306			min	-600.899	4	0.966	7	-3.679	4	51.835	7	-90.551	4	156.832	7	-321.415	2
1307		4	max	57.881	5	-2.12	4	0.387	7	193.313	4	-10.37	7	236.613	4	-117.034	7
1308			min	-600.899	4	-9.833	2	-3.679	4	10.37	7	-193.313	4	95.165	7	-290.988	4
1309		5	max	57.881	5	-13.79	7	0.387	7	132.118	4	178.296	2	-78.699	4	306.717	2
1310			min	-600.899	4	-22.13	2	-3.679	4	-178.296	2	-132.118	4	-249.403	2	96.784	4
1311	M132	1	max	22.219	5	32.936	4	1.094	2	-146.142	7	500.014	4	-332.282	7	930.671	4
1312			min	-565.669	4	15.817	7	-1.892	4	-500.014	4	146.142	7	-756.763	4	408.642	7
1313		2	max	22.219	5	20.64	4	1.094	2	5.541	7	117.604	4	8.806	2	122.575	4
1314			min	-565.669	4	8.439	7	-1.892	4	-117.604	4	-5.541	7	-99.67	4	-10.83	2
1315		3	max	22.219	5	8.343	4	1.094	2	101.738	5	-58.85	7	254.697	2	-187.969	7
1316			min	-565.669	4	1.061	7	-1.892	4	58.85	7	-101.739	5	152.845	7	-313.227	2
1317		4	max	22.219	5	-3.953	4	1.094	2	155.343	4	-13.785	7	240.872	4	-127.057	7
1318			min	-565.669	4	-10.223	2	-1.892	4	13.785	7	-155.344	4	103.315	7	-296.225	4
1319		5	max	22.219	5	-13.695	7	1.094	2	45.881	4	201.432	2	-75.68	4	279.37	2
1320			min	-565.669	4	-22.519	2	-1.892	4	-201.432	2	-45.881	4	-227.166	2	93.071	4
1321	M133	1	max	-8.194	7	32.694	4	-0.151	7	-183.106	7	501.052	4	-319.032	7	863.33	4
1322			min	-496.747	4	16.451	7	-2.613	4	-501.052	4	183.107	7	-702.005	4	392.348	7
1323		2	max	-8.194	7	20.397	4	-0.151	7	-10.922	7	112.267	4	22.213	2	86.489	4
1324			min	-496.747	4	9.073	7	-2.613	4	-112.267	4	10.922	7	-70.328	4	-27.317	2
1325		3	max	-8.194	7	8.101	4	-0.151	7	112.56	4	-62.888	7	253.526	5	-186.877	7
1326			min	-496.747	4	1.696	7	-2.613	4	62.888	7	-112.56	4	151.957	7	-311.787	5
1327		4	max	-8.194	7	-4.196	4	-0.151	7	173.43	4	-38.323	7	219.383	4	-117.272	7
1328			min	-496.747	4	-9.387	2	-2.613	4	38.323	7	-173.43	4	95.358	7	-269.799	4
1329		5	max	-8.194	7	-13.06	7	-0.151	7	70.342	4	135.969	2	-122.583	4	316.992	2
1330			min	-496.747	4	-21.684	2	-2.613	4	-135.969	2	-70.343	4	-257.758	2	150.754	4
1331	M134	1	max	-22.265	7	30.661	4	-0.357	7	-167.733	7	425.962	4	-287.444	7	729.683	4
1332			min	-388.224	4	16.084	7	-2.411	4	-425.961	4	167.734	7	-593.332	4	353.5	7
1333		2	max	-22.265	7	18.364	4	-0.357	7	6.675	5	66.968	4	52.089	5	12.304	4
1334			min	-388.224	4	8.706	7	-2.411	4	-66.968	4	-6.675	5	-10.005	4	-64.059	5

Envelope Member Section Stresses (Continued)

	Member	Sec		Axial[psi]	LC	y Shear[psi]	LC	z Shear[psi]	LC	y-Top[psi]	LC	y-Bot[psi]	LC	z-Top[psi]	LC	z-Bot[psi]	LC
1335		3	max	-22.265	7	6.068	4	-0.357	7	128.069	4	-73.954	7	256.086	5	-188.52	7
1336			min	-388.224	4	1.328	7	-2.411	4	73.954	7	-128.069	4	153.292	7	-314.936	5
1337		4	max	-22.265	7	-6.05	7	-0.357	7	159.147	4	-47.236	7	183.007	4	-100.312	7
1338			min	-388.224	4	-10.145	5	-2.411	4	47.235	7	-159.148	4	81.567	7	-225.063	4
1339		5	max	-22.265	7	-13.428	7	-0.357	7	26.269	4	130.362	5	-184.887	7	380.703	5
1340			min	-388.224	4	-22.441	5	-2.411	4	-130.362	5	-26.269	4	-309.563	5	227.375	7
1341	M135	1	max	-24.696	7	29.556	4	-0.669	7	-155.246	7	349.869	4	-272.922	7	644.193	4
1342			min	-229.497	4	16.356	7	-2.133	4	-349.868	4	155.246	7	-523.817	4	335.641	7
1343		2	max	-24.696	7	17.26	4	-0.669	7	41.596	5	9.315	4	75.622	5	-46.381	4
1344			min	-229.497	4	8.978	7	-2.133	4	-9.315	4	-41.596	5	37.714	4	-93	5
1345		3	max	-24.696	7	4.963	4	-0.669	7	172.307	5	-102.003	7	276.899	5	-203.763	7
1346			min	-229.497	4	1.6	7	-2.133	4	102.003	7	-172.307	5	165.687	7	-340.531	5
1347		4	max	-24.696	7	-5.778	7	-0.669	7	179.921	4	-83.066	7	187.132	4	-114.247	7
1348			min	-229.497	4	-9.73	5	-2.133	4	83.066	7	-179.921	4	92.898	7	-230.136	4
1349		5	max	-24.696	7	-13.156	7	-0.669	7	28.602	4	58.143	5	-174.619	7	361.798	5
1350			min	-229.497	4	-22.027	5	-2.133	4	-58.143	5	-28.602	4	-294.192	5	214.748	7
1351	M136	1	max	-31.796	7	35.02	4	-6.831	7	17.808	7	2064.144	4	490.705	5	-30.858	4
1352			min	-417.925	4	-4.635	2	-53.145	4	-2064.14	4	-17.808	7	25.092	4	-603.471	5
1353		2	max	-31.796	7	35.02	4	-1.835	7	37.185	5	1305.652	4	138.595	5	276.023	4
1354			min	-417.925	4	-4.635	2	-44.817	4	-1305.649	4	-37.186	5	-224.444	4	-170.445	5
1355		3	max	-31.796	7	35.02	4	3.161	7	77.828	5	622.35	4	-17.559	7	399.863	4
1356			min	-417.925	4	-4.635	2	-36.49	4	-622.349	4	-77.828	5	-325.143	4	21.594	7
1357		4	max	-31.796	7	35.02	4	8.158	7	43.279	5	107.968	7	12.464	7	340.663	4
1358			min	-417.925	4	-4.635	2	-28.163	4	-107.968	7	-43.279	5	-277.006	4	-15.328	7
1359		5	max	-31.796	7	35.02	4	16.268	2	518.679	4	240.122	7	131.788	7	98.423	4
1360			min	-417.925	4	-4.635	2	-19.836	4	-240.122	7	-518.68	4	-80.031	4	-162.074	7
1361	M137	1	max	-43.355	7	-2.291	7	-12.623	7	-33.307	7	316.845	4	723.013	4	-313.502	7
1362			min	-768.172	4	-2.97	2	-27.578	4	-316.845	4	33.307	7	254.92	7	-889.165	4
1363		2	max	-43.355	7	-2.291	7	-5.245	7	55.266	7	67.678	4	84.989	4	59.066	2
1364			min	-768.172	4	-2.97	2	-15.282	4	-67.678	4	-55.266	7	-48.029	2	-104.52	4
1365		3	max	-43.355	7	-2.291	7	2.133	7	70.536	2	-17.531	4	-142.855	7	291.156	2
1366			min	-768.172	4	-2.97	2	-2.986	4	17.531	4	-70.536	2	-236.75	2	175.684	7
1367		4	max	-43.355	7	-2.291	7	14.265	2	-58.924	6	77.291	2	-49.65	7	267.381	4
1368			min	-768.172	4	-2.97	2	9.311	4	-77.291	2	58.924	6	-217.417	4	61.06	7
1369		5	max	-43.355	7	-2.291	7	26.561	2	-269.264	7	389.076	2	359.45	2	-145.363	4
1370			min	-768.172	4	-2.97	2	16.889	7	-389.076	2	269.265	7	118.2	4	-442.053	2
1371	M138	1	max	-22.872	7	0.155	4	-14.398	7	-67.262	7	469.977	4	837.82	4	-391.774	7
1372			min	-531.657	4	-2.496	2	-32.745	4	-469.976	4	67.263	7	318.566	7	-1030.355	4
1373		2	max	-22.872	7	0.155	4	-7.02	7	78.689	2	113.282	4	139.934	4	10.014	7
1374			min	-531.657	4	-2.496	2	-20.448	4	-113.281	4	-78.689	2	-8.142	7	-172.092	4
1375		3	max	-22.872	7	0.155	4	0.358	7	133.106	5	-75.436	7	-140.122	7	287.043	4
1376			min	-531.657	4	-2.496	2	-8.152	4	75.436	7	-133.107	5	-233.405	4	172.323	7
1377		4	max	-22.872	7	0.155	4	12.073	2	108.234	4	0.777	7	-77.374	7	347.047	4
1378			min	-531.657	4	-2.496	2	4.145	4	-0.777	7	-108.234	4	-282.197	4	95.155	7
1379		5	max	-22.872	7	0.155	4	24.37	2	-26.945	4	258.182	2	274.119	2	7.922	4
1380			min	-531.657	4	-2.496	2	15.113	7	-258.181	2	26.945	4	-6.442	4	-337.113	2
1381	M139	1	max	-5.671	5	1.349	4	-15.292	7	-151.776	7	539.916	4	782.228	4	-368.03	7
1382			min	-345.891	4	-0.678	2	-32.735	4	-539.915	4	151.776	7	299.259	7	-961.988	4
1383		2	max	-5.671	5	1.349	4	-7.914	7	-2.885	7	167.426	4	116.115	4	30.41	2
1384			min	-345.891	4	-0.678	2	-20.439	4	-167.425	4	2.885	7	-24.727	2	-142.799	4
1385		3	max	-5.671	5	1.349	4	-0.536	7	85.241	5	-41.106	4	-141.542	7	289.201	2
1386			min	-345.891	4	-0.678	2	-8.142	4	41.106	4	-85.241	5	-235.16	2	174.069	7
1387		4	max	-5.671	5	1.349	4	11.149	2	85.68	4	0.227	7	-69.85	7	298.191	4
1388			min	-345.891	4	-0.678	2	4.154	4	-0.227	7	-85.68	4	-242.47	4	85.902	7
1389		5	max	-5.671	5	1.349	4	23.446	2	-33.704	4	232.32	2	317.615	2	-80.008	4

Envelope Member Section Stresses (Continued)

	Member	Sec		Axial[psi]	LC	y Shear[psi]	LC	z Shear[psi]	LC	y-Top[psi]	LC	y-Bot[psi]	LC	z-Top[psi]	LC	z-Bot[psi]	LC
1390			min	-345.891	4	-0.678	2	14.22	7	-232.32	2	33.704	4	65.058	4	-390.605	2
1391	M140	1	max	33.35	5	0.508	4	-15.186	7	-120.405	7	367.623	4	688.662	4	-364.894	7
1392			min	-181.334	4	-0.77	2	-30.232	4	-367.622	4	120.405	7	296.709	7	-846.92	4
1393		2	max	33.35	5	0.508	4	-7.808	7	46.538	5	39.725	4	66.406	4	38.684	2
1394			min	-181.334	4	-0.77	2	-17.936	4	-39.725	4	-46.538	5	-31.456	2	-81.667	4
1395		3	max	33.35	5	0.508	4	-0.43	7	128.938	5	-75.205	7	-140.449	7	288.242	5
1396			min	-181.334	4	-0.77	2	-5.639	4	75.204	7	-128.939	5	-234.381	5	172.725	7
1397		4	max	33.35	5	0.508	4	11.531	2	124.197	4	-25.447	7	-66.936	7	251.451	4
1398			min	-181.334	4	-0.77	2	6.657	4	25.447	7	-124.197	4	-204.464	4	82.318	7
1399		5	max	33.35	5	0.508	4	23.827	2	-39.779	4	200.42	2	333.754	2	-180.684	4
1400			min	-181.334	4	-0.77	2	14.325	7	-200.42	2	39.779	4	146.921	4	-410.453	2
1401	M141	1	max	53.242	5	0.642	4	-14.739	7	-109.393	7	297.13	4	577.792	4	-320.232	7
1402			min	-63.317	4	-0.345	5	-28.191	4	-297.13	4	109.394	7	260.392	7	-710.571	4
1403		2	max	53.242	5	0.642	4	-7.361	7	62.102	5	-5.335	4	12.954	4	76.994	5
1404			min	-63.317	4	-0.345	5	-15.894	4	5.335	4	-62.102	5	-62.607	5	-15.93	4
1405		3	max	53.242	5	0.642	4	0.107	5	143.843	4	-81.716	7	-138.434	7	284.29	5
1406			min	-63.317	4	-0.345	5	-3.598	4	81.716	7	-143.843	4	-231.167	5	170.246	7
1407		4	max	53.242	5	0.642	4	12.403	5	118.392	4	-29.708	7	-45.754	7	175.963	4
1408			min	-63.317	4	-0.345	5	7.395	7	29.708	7	-118.392	4	-143.082	4	56.269	7
1409		5	max	53.242	5	0.642	4	24.7	5	-71.016	4	201.908	5	405.354	5	-297.186	7
1410			min	-63.317	4	-0.345	5	14.773	7	-201.908	5	71.017	4	241.653	7	-498.507	5
1411	M142	1	max	47.559	5	0.197	4	-15.382	7	-92.096	7	212.918	4	525.012	4	-324.418	7
1412			min	1.073	4	-0.229	2	-27.614	4	-212.918	4	92.097	7	263.797	7	-645.662	4
1413		2	max	47.559	5	0.197	4	-8.004	7	106.471	5	-61.976	7	-36.33	4	103.371	5
1414			min	1.073	4	-0.229	2	-15.317	4	61.976	7	-106.471	5	-84.055	5	44.679	4
1415		3	max	47.559	5	0.197	4	-0.626	7	200.82	4	-117.673	7	-166	7	341.367	5
1416			min	1.073	4	-0.229	2	-3.021	4	117.673	7	-200.821	4	-277.578	5	204.147	7
1417		4	max	47.559	5	0.197	4	11.341	5	161.752	4	-74.996	7	-88.806	7	227.973	4
1418			min	1.073	4	-0.229	2	6.752	7	74.996	7	-161.753	4	-185.373	4	109.213	7
1419		5	max	47.559	5	0.197	4	23.637	5	-41.273	4	110.35	5	309.016	5	-225.198	7
1420			min	1.073	4	-0.229	2	14.13	7	-110.35	5	41.273	4	183.117	7	-380.03	5
1421	M143	1	max	345.72	4	32.649	5	16.328	7	259.864	7	482.207	5	161.683	4	1060.76	2
1422			min	30.175	7	4.032	4	-20.842	4	-482.206	5	-259.865	7	-862.543	2	-198.839	4
1423		2	max	345.72	4	32.649	5	19.861	7	175.741	7	187.44	5	-13.563	4	651.747	2
1424			min	30.175	7	4.032	4	-14.954	4	-187.44	5	-175.741	7	-529.96	2	16.68	4
1425		3	max	345.72	4	32.649	5	23.394	7	86.776	2	-28.774	4	-80.063	7	151.215	2
1426			min	30.175	7	4.032	4	-9.066	4	28.774	4	-86.776	2	-122.958	2	98.461	7
1427		4	max	345.72	4	32.649	5	26.927	7	289.306	5	60.177	7	358.462	2	173.156	4
1428			min	30.175	7	4.032	4	-3.178	4	-60.176	7	-289.306	5	-140.799	4	-440.838	2
1429		5	max	345.72	4	32.649	5	30.46	7	471.285	5	211.972	7	914.3	2	114.113	4
1430			min	30.175	7	4.032	4	2.711	4	-211.971	7	-471.286	5	-92.79	4	-1124.411	2
1431	M144	1	max	325.062	4	58.181	4	-12.266	7	-281.685	7	2022.846	4	1123.016	4	143.362	7
1432			min	21.371	7	12.942	7	-107.979	4	-2022.842	4	281.685	7	-116.573	7	-1381.091	4
1433		2	max	325.062	4	58.181	4	-8.734	7	-132.01	7	980.733	4	530.848	4	105.406	7
1434			min	21.371	7	12.942	7	-102.091	4	-980.732	4	132.011	7	-85.709	7	-652.84	4
1435		3	max	325.062	4	58.181	4	-5.201	7	23.784	4	8.651	5	13.099	4	16.528	2
1436			min	21.371	7	12.942	7	-96.203	4	-8.651	5	-23.784	4	-13.44	2	-16.109	4
1437		4	max	325.062	4	58.181	4	-1.668	7	990.704	4	-99.666	7	119.994	2	529.102	4
1438			min	21.371	7	12.942	7	-90.314	4	99.666	7	-990.705	4	-430.232	4	-147.569	2
1439		5	max	325.062	4	58.181	4	1.865	7	1920.028	4	-181.669	7	327.846	2	982.792	4
1440			min	21.371	7	12.942	7	-84.426	4	181.668	7	-1920.032	4	-799.145	4	-403.186	2
1441	M145	1	max	214.882	4	52.054	4	-14.306	7	-324.035	7	1877.313	4	1005.672	4	136.709	2
1442			min	10.854	7	13.068	7	-100.177	4	-1877.309	4	324.035	7	-111.164	2	-1236.78	4
1443		2	max	214.882	4	52.054	4	-10.773	7	-160.537	7	924.133	4	434.681	4	160.425	2
1444			min	10.854	7	13.068	7	-94.289	4	-924.132	4	160.537	7	-130.447	2	-534.573	4

Envelope Member Section Stresses (Continued)

	Member	Sec		Axial[psi]	LC	y Shear[psi]	LC	z Shear[psi]	LC	y-Top[psi]	LC	y-Bot[psi]	LC	z-Top[psi]	LC	z-Bot[psi]	LC
1445		3	max	214.882	4	52.054	4	-7.24	7	-8.549	4	32.209	2	-46.522	7	92.62	2
1446			min	10.854	7	13.068	7	-88.401	4	-32.209	2	8.549	4	-75.313	2	57.213	7
1447		4	max	214.882	4	52.054	4	-3.707	7	869.438	4	-98.786	7	54.24	2	595.28	4
1448			min	10.854	7	13.068	7	-82.512	4	98.786	7	-869.439	4	-484.044	4	-66.705	2
1449		5	max	214.882	4	52.054	4	-0.174	7	1709.829	4	-194.612	7	258.212	2	1022.927	4
1450			min	10.854	7	13.068	7	-76.624	4	194.612	7	-1709.833	4	-831.78	4	-317.55	2
1451	M146	1	max	132.681	4	38.381	4	-15.608	7	-262.895	7	1563.555	4	1071.898	4	-91.177	7
1452			min	-1.691	5	8.038	7	-87.699	4	-1563.552	4	262.896	7	74.139	7	-1318.226	4
1453		2	max	132.681	4	38.381	4	-12.076	7	-123.195	7	777.347	4	485.81	4	-0.965	7
1454			min	-1.691	5	8.038	7	-81.81	4	-777.346	4	123.195	7	0.784	7	-597.452	4
1455		3	max	132.681	4	38.381	4	-8.543	7	-6.052	7	28.735	4	-25.86	4	56.623	2
1456			min	-1.691	5	8.038	7	-75.922	4	-28.735	4	6.052	7	-46.042	2	31.803	4
1457		4	max	132.681	4	38.381	4	-5.01	7	682.28	4	-88.534	7	-11.973	7	569.537	4
1458			min	-1.691	5	8.038	7	-70.034	4	88.534	7	-682.281	4	-463.112	4	14.724	7
1459		5	max	132.681	4	38.381	4	-1.477	7	1355.7	4	-160.563	7	64.908	2	1015.751	4
1460			min	-1.691	5	8.038	7	-64.146	4	160.562	7	-1355.702	4	-825.945	4	-79.824	2
1461	M147	1	max	64.277	4	25.429	4	-11.887	7	-151.136	7	1093.236	4	833.284	4	-107.558	7
1462			min	-15.327	5	3.692	7	-65.692	4	-1093.234	4	151.136	7	87.459	7	-1024.777	4
1463		2	max	64.277	4	25.429	4	-8.354	7	-62.944	7	530.235	4	361.633	4	-7.644	7
1464			min	-15.327	5	3.692	7	-59.804	4	-530.234	4	62.944	7	6.216	7	-444.739	4
1465		3	max	64.277	4	25.429	4	-4.821	7	3.934	2	4.829	4	-30.377	7	62.109	2
1466			min	-15.327	5	3.692	7	-53.916	4	-4.829	4	-3.934	2	-50.503	2	37.357	7
1467		4	max	64.277	4	25.429	4	-1.288	7	482.981	4	-45.769	7	-22.318	7	440.778	4
1468			min	-15.327	5	3.692	7	-48.027	4	45.769	7	-482.982	4	-358.413	4	27.447	7
1469		5	max	64.277	4	25.429	4	3.806	5	933.195	4	-66.289	7	57.177	5	746.256	4
1470			min	-15.327	5	3.692	7	-42.139	4	66.289	7	-933.197	4	-606.808	4	-70.316	5
1471	M148	1	max	19.313	4	12.626	4	-4.836	7	48.956	5	576.608	4	509.565	4	-32.744	5
1472			min	-19.838	5	-2.085	5	-40.253	4	-576.607	4	-48.956	5	26.626	5	-626.666	4
1473		2	max	19.313	4	12.626	4	-0.951	5	60.512	5	257.782	4	197.607	4	60.202	5
1474			min	-19.838	5	-2.085	5	-34.365	4	-257.782	4	-60.512	5	-48.952	5	-243.018	4
1475		3	max	19.313	4	12.626	4	4.937	5	34.595	2	-20.874	7	-29.997	7	61.628	5
1476			min	-19.838	5	-2.085	5	-28.476	4	20.874	7	-34.595	2	-50.112	5	36.89	7
1477		4	max	19.313	4	12.626	4	10.826	5	267.082	4	29.161	5	23.147	5	249.717	4
1478			min	-19.838	5	-2.085	5	-22.588	4	-29.161	5	-267.082	4	-203.054	4	-28.466	5
1479		5	max	19.313	4	12.626	4	16.714	5	473.121	4	130.391	5	170.824	5	358.804	4
1480			min	-19.838	5	-2.085	5	-16.7	4	-130.39	5	-473.121	4	-291.757	4	-210.081	5
1481	M149	1	max	1.278	4	-0.195	4	6.545	5	302.29	5	59.103	4	42.201	4	300.893	5
1482			min	-9.565	5	-8.476	5	-12.776	4	-59.103	4	-302.29	5	-244.667	5	-51.899	4
1483		2	max	1.278	4	-0.195	4	12.433	5	187.583	5	-2.432	4	-84.524	4	285.153	5
1484			min	-9.565	5	-8.476	5	-6.888	4	2.432	4	-187.583	5	-231.869	5	103.948	4
1485		3	max	1.278	4	-0.195	4	18.321	5	35.306	2	-21.206	7	-86.617	7	177.894	5
1486			min	-9.565	5	-8.476	5	-1	4	21.206	7	-35.306	2	-144.652	5	106.522	7
1487		4	max	1.278	4	-0.195	4	24.21	5	12.717	4	154.616	5	16.983	5	141.082	4
1488			min	-9.565	5	-8.476	5	4.888	4	-154.616	5	-12.717	4	-114.719	4	-20.886	5
1489		5	max	1.278	4	-0.195	4	30.098	5	-38.534	4	382.109	5	253.037	5	22.369	4
1490			min	-9.565	5	-8.476	5	10.776	4	-382.109	5	38.534	4	-18.189	4	-311.186	5
1491	M150	1	max	316.577	4	72.515	4	-13.529	7	-156.319	7	2045.626	4	723.517	4	-583.578	7
1492			min	-71.528	5	-1.193	7	-94.634	4	-2045.622	4	156.32	7	474.529	7	-889.785	4
1493		2	max	316.577	4	66.627	4	-13.529	7	-88.834	7	997.198	4	406.753	4	-327.297	7
1494			min	-71.528	5	-4.726	7	-94.634	4	-997.196	4	88.834	7	266.137	7	-500.226	4
1495		3	max	316.577	4	60.738	4	-13.529	7	13.635	4	64.543	2	15.57	4	4.684	5
1496			min	-71.528	5	-8.259	7	-94.634	4	-64.543	2	-13.635	4	-3.809	5	-19.148	4
1497		4	max	316.577	4	54.85	4	-13.529	7	986.87	4	21.535	7	-284.6	7	553.451	4
1498			min	-71.528	5	-11.792	7	-94.634	4	-21.535	7	-986.872	4	-450.032	4	350.002	7
1499		5	max	316.577	4	48.962	4	-13.529	7	1922.51	4	21.721	7	-626.945	7	1217.571	4

Envelope Member Section Stresses (Continued)

	Member	Sec		Axial[psi]	LC	y Shear[psi]	LC	z Shear[psi]	LC	y-Top[psi]	LC	y-Bot[psi]	LC	z-Top[psi]	LC	z-Bot[psi]	LC
1500			min	-71.528	5	-15.325	7	-94.634	4	-21.721	7	-1922.514	4	-990.052	4	771.02	7
1501	M151	1	max	347.664	4	111.583	4	-21.924	7	-421.568	7	2617.979	4	541.823	2	318.711	4
1502			min	-49.903	5	11.451	7	-92.928	4	-2617.974	4	421.569	7	-259.156	4	-666.337	2
1503		2	max	347.664	4	105.695	4	-21.924	7	-219.748	7	1331.001	4	346.088	2	74.502	4
1504			min	-49.903	5	7.918	7	-92.928	4	-1330.998	4	219.748	7	-60.58	4	-425.621	2
1505		3	max	347.664	4	99.807	4	-21.924	7	-40.484	7	81.617	4	75.934	2	-56.252	7
1506			min	-49.903	5	4.385	7	-92.928	4	-81.617	4	40.484	7	45.741	7	-93.384	2
1507		4	max	347.664	4	93.919	4	-21.924	7	1130.169	4	-116.222	7	113.314	4	330.373	2
1508			min	-49.903	5	0.853	7	-92.928	4	116.222	7	-1130.171	4	-268.638	2	-139.354	4
1509		5	max	347.664	4	88.03	4	-21.924	7	2304.359	4	-250.372	7	88.633	4	845.65	2
1510			min	-49.903	5	-2.68	7	-92.928	4	250.371	7	-2304.364	4	-687.63	2	-109.001	4
1511	M152	1	max	327.523	4	106.667	4	-16.382	7	-355.601	7	2393.107	4	312.36	2	496.786	4
1512			min	-25.86	5	13.085	7	-82.37	4	-2393.102	4	355.602	7	-403.955	4	-384.142	2
1513		2	max	327.523	4	100.779	4	-16.382	7	-178.736	7	1204.931	4	234.624	2	164.892	4
1514			min	-25.86	5	9.552	7	-82.37	4	-1204.928	4	178.736	7	-134.079	4	-288.542	2
1515		3	max	327.523	4	94.89	4	-16.382	7	-24.428	7	54.35	4	82.469	2	-62.112	7
1516			min	-25.86	5	6.019	7	-82.37	4	-54.35	4	24.428	7	50.505	7	-101.421	2
1517		4	max	327.523	4	89.002	4	-16.382	7	1058.634	4	-107.323	7	182.415	4	177.221	2
1518			min	-25.86	5	2.486	7	-82.37	4	107.323	7	-1058.636	4	-144.105	2	-224.335	4
1519		5	max	327.523	4	83.114	4	-16.382	7	2134.022	4	-216.517	7	229.034	4	547.383	2
1520			min	-25.86	5	-1.047	7	-82.37	4	216.516	7	-2134.026	4	-445.097	2	-281.668	4
1521	M153	1	max	303.721	4	92.57	4	-13.333	7	-332.882	7	1958.822	4	138.508	2	603.037	4
1522			min	-6.727	2	15.418	7	-64.244	4	-1958.818	4	332.882	7	-490.352	4	-170.338	2
1523		2	max	303.721	4	86.681	4	-13.333	7	-160.593	7	976.382	4	154.085	2	208.531	4
1524			min	-6.727	2	11.885	7	-64.244	4	-976.381	4	160.593	7	-169.564	4	-189.495	2
1525		3	max	303.721	4	80.793	4	-13.333	7	-10.862	7	31.539	4	95.243	2	-70.779	7
1526			min	-6.727	2	8.352	7	-64.244	4	-31.539	4	10.862	7	57.553	7	-117.131	2
1527		4	max	303.721	4	74.905	4	-13.333	7	875.708	4	-116.313	7	248.755	4	46.754	2
1528			min	-6.727	2	4.819	7	-64.244	4	116.313	7	-875.71	4	-38.017	2	-305.92	4
1529		5	max	303.721	4	69.017	4	-13.333	7	1745.36	4	-220.93	7	346.286	4	302.159	2
1530			min	-6.727	2	1.286	7	-64.244	4	220.93	7	-1745.363	4	-245.697	2	-425.864	4
1531	M154	1	max	261.322	4	69.863	4	-7.49	7	-200.576	7	1394.138	4	57.708	5	505.554	4
1532			min	3.882	7	11.993	7	-44.513	4	-1394.136	4	200.577	7	-411.085	4	-70.97	5
1533		2	max	261.322	4	63.974	4	-7.49	7	-87.46	7	682.661	4	113.922	5	157.305	4
1534			min	3.882	7	8.46	7	-44.513	4	-682.66	4	87.46	7	-127.91	4	-140.102	5
1535		3	max	261.322	4	58.086	4	-7.49	7	4.447	2	8.779	4	95.772	2	-70.75	7
1536			min	3.882	7	4.927	7	-44.513	4	-8.779	4	-4.447	2	57.529	7	-117.781	2
1537		4	max	261.322	4	52.198	4	-7.49	7	627.507	4	-71.102	7	215.182	4	-3.454	7
1538			min	3.882	7	1.394	7	-44.513	4	71.102	7	-627.508	4	2.809	7	-264.631	4
1539		5	max	261.322	4	46.31	4	-7.49	7	1226.197	4	-116.547	7	275.1	4	201.626	5
1540			min	3.882	7	-3.568	5	-44.513	4	116.547	7	-1226.199	4	-163.95	5	-338.319	4
1541	M155	1	max	198.41	4	43.412	4	-0.223	5	10.452	5	754.767	4	70.284	5	338.98	4
1542			min	8.225	7	5.063	7	-23.199	4	-754.765	4	-10.452	5	-275.637	4	-86.436	5
1543		2	max	198.41	4	37.524	4	-0.223	5	39.226	5	348.263	4	121.605	5	70.555	4
1544			min	8.225	7	1.34	5	-23.199	4	-348.262	4	-39.226	5	-57.371	4	-149.55	5
1545		3	max	198.41	4	31.636	4	-0.223	5	30.559	2	-18.493	7	98.507	5	-72.602	7
1546			min	8.225	7	-4.549	5	-23.199	4	18.493	7	-30.559	2	59.035	7	-121.144	5
1547		4	max	198.41	4	25.748	4	-0.223	5	351.959	4	16.012	5	155.904	4	-1.217	5
1548			min	8.225	7	-10.437	5	-23.199	4	-16.012	5	-351.959	4	0.99	5	-191.732	4
1549		5	max	198.41	4	19.86	4	-0.223	5	645.676	4	100.024	5	150.914	4	210.23	5
1550			min	8.225	7	-16.325	5	-23.199	4	-100.024	5	-645.677	4	-170.946	5	-185.595	4
1551	M156	1	max	109.256	4	14.241	4	8.165	5	336.467	5	118.672	4	287.312	5	-69.627	4
1552			min	4.707	7	-7.607	5	-4.783	4	-118.671	4	-336.467	5	56.616	4	-353.338	5
1553		2	max	109.256	4	8.353	4	8.165	5	216.967	5	16	4	257.143	5	-170.876	4
1554			min	4.707	7	-13.496	5	-4.783	4	-16	4	-216.968	5	138.946	4	-316.236	5

Envelope Member Section Stresses (Continued)

	Member	Sec		Axial[psi]	LC	y Shear[psi]	LC	z Shear[psi]	LC	y-Top[psi]	LC	y-Bot[psi]	LC	z-Top[psi]	LC	z-Bot[psi]	LC
1555		3	max	109.256	4	2.465	4	8.165	5	59.872	5	-35.872	7	152.556	5	-112.441	7
1556			min	4.707	7	-19.384	5	-4.783	4	35.872	7	-59.872	5	91.43	7	-187.614	5
1557		4	max	109.256	4	-3.423	4	8.165	5	76.558	4	134.818	5	80.348	4	32.529	5
1558			min	4.707	7	-25.272	5	-4.783	4	-134.818	5	-76.558	4	-26.451	5	-98.813	4
1559		5	max	109.256	4	-9.311	4	8.165	5	66.444	4	367.104	5	-60.579	4	344.193	5
1560			min	4.707	7	-31.16	5	-4.783	4	-367.103	5	-66.444	4	-279.876	5	74.5	4
1561	M157	1	max	653.104	4	16.585	2	3.578	4	109.547	4	26.053	2	-40.401	7	78.298	2
1562			min	380.506	7	10.059	7	0.064	7	-26.053	2	-109.547	4	-66.239	2	47.756	7
1563		2	max	653.104	4	5.698	2	3.578	4	144.984	4	-41.584	7	157.334	4	-103.806	7
1564			min	380.506	7	1.981	4	0.064	7	41.584	7	-144.984	4	87.818	7	-185.976	4
1565		3	max	653.104	4	-3.004	7	3.578	4	80.11	4	-43.403	7	159.493	4	-111.006	7
1566			min	380.506	7	-8.906	4	0.064	7	43.403	7	-80.111	4	93.91	7	-188.528	4
1567		4	max	653.104	4	-9.536	7	3.578	4	-14.965	7	85.074	4	-22.127	7	49.523	4
1568			min	380.506	7	-19.792	4	0.064	7	-85.074	4	14.965	7	-41.896	4	26.155	7
1569		5	max	653.104	4	-16.068	7	3.578	4	-133.52	7	350.569	4	-260.293	7	528.177	4
1570			min	380.506	7	-30.679	4	0.064	7	-350.569	4	133.52	7	-446.832	4	307.679	7
1571	M158	1	max	1416.669	5	15.752	2	8.344	4	152.594	4	4.141	2	-134.948	7	268.522	4
1572			min	844.333	7	9.467	7	2.205	7	-4.141	2	-152.594	4	-227.167	4	159.515	7
1573		2	max	1416.669	5	4.866	2	8.344	4	128.846	4	-33.371	7	36.666	4	-26.269	7
1574			min	844.333	7	0.324	4	2.205	7	33.371	7	-128.846	4	22.224	7	-43.341	4
1575		3	max	1416.669	5	-3.597	7	8.344	4	17.368	5	-4.787	4	96.951	4	-67.692	7
1576			min	844.333	7	-10.563	4	2.205	7	4.787	4	-17.368	5	57.267	7	-114.601	4
1577		4	max	1416.669	5	-10.129	7	8.344	4	-73.563	7	219.582	4	-29.818	7	58.936	2
1578			min	844.333	7	-21.45	4	2.205	7	-219.582	4	73.563	7	-49.859	2	35.247	7
1579		5	max	1416.669	5	-16.661	7	8.344	4	-217.31	7	544.262	4	-239.032	7	470.945	2
1580			min	844.333	7	-32.336	4	2.205	7	-544.261	4	217.31	7	-398.414	2	282.548	7
1581	M159	1	max	2382.109	5	13.381	5	12.635	4	247.596	4	-23.36	7	-145.581	7	290.698	6
1582			min	1418.299	7	6.915	4	3.651	7	23.36	7	-247.596	4	-245.927	6	172.084	7
1583		2	max	2382.109	5	2.494	5	12.635	4	144.726	4	-32.609	7	18.18	4	-11.482	7
1584			min	1418.299	7	-3.972	4	3.651	7	32.609	7	-144.726	4	9.714	7	-21.49	4
1585		3	max	2382.109	5	-5.143	7	12.635	4	-18.329	7	58.454	4	78.389	4	-50.686	7
1586			min	1418.299	7	-14.858	4	3.651	7	-58.454	4	18.329	7	42.88	7	-92.66	4
1587		4	max	2382.109	5	-11.675	7	12.635	4	-129.453	7	361.946	4	-46.083	7	91.016	2
1588			min	1418.299	7	-25.745	4	3.651	7	-361.945	4	129.453	7	-76.998	2	54.472	7
1589		5	max	2382.109	5	-18.207	7	12.635	4	-300.764	7	765.748	4	-257.173	7	506.18	2
1590			min	1418.299	7	-36.632	4	3.651	7	-765.746	4	300.764	7	-428.222	2	303.991	7
1591	M160	1	max	3554.711	5	11.224	5	15.91	4	281.442	4	-38.438	7	-179.035	7	364.813	4
1592			min	2119.707	7	4.518	4	5.464	7	38.438	7	-281.442	4	-308.628	4	211.628	7
1593		2	max	3554.711	5	0.338	5	15.91	4	126.319	4	-17.629	7	-16.933	7	37.84	5
1594			min	2119.707	7	-6.369	4	5.464	7	17.629	7	-126.319	4	-32.012	5	20.015	7
1595		3	max	3554.711	5	-6.592	7	15.91	4	-63.367	7	129.115	4	48.145	4	-27.236	7
1596			min	2119.707	7	-17.255	4	5.464	7	-129.115	4	63.367	7	23.042	7	-56.91	4
1597		4	max	3554.711	5	-13.124	7	15.91	4	-204.549	7	484.86	4	-59.113	7	117.112	5
1598			min	2119.707	7	-28.142	4	5.464	7	-484.859	4	204.55	7	-99.076	5	69.874	7
1599		5	max	3554.711	5	-19.656	7	15.91	4	-405.918	7	940.916	4	-263.395	7	518.318	2
1600			min	2119.707	7	-39.028	4	5.464	7	-940.914	4	405.919	7	-438.491	2	311.346	7
1601	M161	1	max	4092.821	5	10.823	5	18.817	4	217.928	4	43.8	5	-145.261	7	303.507	4
1602			min	2452.049	7	0.14	4	5.12	7	-43.8	5	-217.928	4	-263.752	4	167.156	7
1603		2	max	4092.821	5	-0.155	5	18.817	4	35.817	4	59.162	5	-33.004	7	70.066	5
1604			min	2452.049	7	-10.838	4	5.12	7	-59.162	5	-35.817	4	-60.889	5	37.978	7
1605		3	max	4092.821	5	-7.616	7	18.817	4	-97.93	7	229.02	4	-20.884	7	39.998	2
1606			min	2452.049	7	-21.816	4	5.12	7	-229.02	4	97.93	7	-34.759	2	24.032	7
1607		4	max	4092.821	5	-14.203	7	18.817	4	-218.72	7	576.585	4	-108.903	7	204.467	2
1608			min	2452.049	7	-32.794	4	5.12	7	-576.584	4	218.72	7	-177.685	2	125.318	7
1609		5	max	4092.821	5	-20.79	7	18.817	4	-389.146	7	1006.877	4	-297.06	7	560.989	2

Envelope Member Section Stresses (Continued)

	Member	Sec		Axial[psi]	LC	y Shear[psi]	LC	z Shear[psi]	LC	y-Top[psi]	LC	y-Bot[psi]	LC	z-Top[psi]	LC	z-Bot[psi]	LC
1610			min	2452.049	7	-43.772	4	5.12	7	-1006.875	4	389.147	7	-487.508	2	341.834	7
1611	M162	1	max	5433.455	2	7.63	5	16.887	4	22.945	4	62.593	5	-270.16	7	524.085	5
1612			min	3274.482	7	3.98	7	10.459	7	-62.593	5	-22.945	4	-455.438	5	310.88	7
1613		2	max	5433.455	2	-2.607	7	16.887	4	-84.621	7	169.653	5	-100.707	7	211.506	4
1614			min	3274.482	7	-6.457	4	10.459	7	-169.653	5	84.621	7	-183.802	4	115.886	7
1615		3	max	5433.455	2	-9.193	7	16.887	4	-207.899	7	359.44	5	-31.392	7	125.067	4
1616			min	3274.482	7	-17.435	4	10.459	7	-359.439	5	207.9	7	-108.685	4	36.124	7
1617		4	max	5433.455	2	-15.78	7	16.887	4	-380.814	7	633.232	2	-62.215	7	230.679	4
1618			min	3274.482	7	-28.413	4	10.459	7	-633.231	2	380.815	7	-200.464	4	71.592	7
1619		5	max	5433.455	2	-22.367	7	16.887	4	-603.365	7	1011.598	4	-193.176	7	528.345	4
1620			min	3274.482	7	-39.391	4	10.459	7	-1011.596	4	603.366	7	-459.14	4	222.293	7
1621	M163	1	max	5517.974	2	9.117	5	125.268	4	-196.921	4	771.061	5	-211.791	7	1277.05	4
1622			min	3341.493	7	-20.611	4	3.621	5	-771.06	5	196.922	4	-1109.777	4	243.714	7
1623		2	max	5517.974	2	3.129	5	125.268	4	-439.187	7	808.848	4	-186.317	7	343.863	2
1624			min	3341.493	7	-26.599	4	3.621	5	-808.847	4	439.188	7	-298.822	2	214.4	7
1625		3	max	5517.974	2	-2.859	5	125.268	4	-523.271	7	1445.388	4	526.636	4	324.393	2
1626			min	3341.493	7	-32.587	4	3.621	5	-1445.385	4	523.272	7	-281.903	2	-606.014	4
1627		4	max	5517.974	2	-8.847	5	125.268	4	-622.124	7	2106.54	4	1270.359	4	362.063	2
1628			min	3341.493	7	-38.575	4	3.621	5	-2106.536	4	622.125	7	-314.639	2	-1461.837	4
1629		5	max	5517.974	2	-14.835	5	125.268	4	-735.744	7	2792.305	4	1964.428	4	456.873	2
1630			min	3341.493	7	-44.563	4	3.621	5	-2792.3	4	735.745	7	-397.03	2	-2260.52	4
1631	M164	1	max	6232.783	4	4.061	5	120.273	4	1496.857	4	102.059	5	-372.611	7	3121.196	4
1632			min	3139.814	7	-18.425	4	15.19	5	-102.059	5	-1496.86	4	-2712.369	4	428.774	7
1633		2	max	6232.783	4	-1.927	5	120.273	4	914.451	4	160.112	5	-269.657	7	2177.899	4
1634			min	3139.814	7	-24.413	4	15.19	5	-160.112	5	-914.452	4	-1892.629	4	310.301	7
1635		3	max	6232.783	4	-7.915	5	120.273	4	307.431	4	243.356	2	-196.495	7	1291.741	4
1636			min	3139.814	7	-30.401	4	15.19	5	-243.356	2	-307.432	4	-1122.544	4	226.112	7
1637		4	max	6232.783	4	-12.944	7	120.273	4	-259.545	7	380.93	2	-153.126	7	462.723	4
1638			min	3139.814	7	-36.389	4	15.19	5	-380.929	2	259.546	7	-402.114	4	176.207	7
1639		5	max	6232.783	4	-16.537	7	120.273	4	-387.452	7	980.449	4	268.661	4	274.427	5
1640			min	3139.814	7	-42.377	4	15.19	5	-980.447	4	387.453	7	-238.481	5	-309.155	4
1641	M165	1	max	6094.321	4	31.745	5	7.548	2	-280.034	7	563.402	5	-498.366	7	1051.043	5
1642			min	3179.984	7	16.598	7	5.168	7	-563.401	5	280.034	7	-913.373	5	573.484	7
1643		2	max	6094.321	4	20.767	5	7.548	2	-218.718	7	425.236	4	-217.532	7	471.184	5
1644			min	3179.984	7	10.011	7	5.168	7	-425.235	4	218.718	7	-409.466	5	250.32	7
1645		3	max	6094.321	4	9.789	5	7.548	2	-207.038	7	400.871	4	-11.444	4	83.377	5
1646			min	3179.984	7	3.424	7	5.168	7	-400.871	4	207.038	7	-72.456	5	13.168	4
1647		4	max	6094.321	4	-1.189	5	7.548	2	-244.994	7	459.234	4	97.658	5	-50.313	7
1648			min	3179.984	7	-6.906	4	5.168	7	-459.233	4	244.995	7	43.722	7	-112.378	5
1649		5	max	6094.321	4	-9.749	7	7.548	2	-332.587	7	600.323	4	100.875	5	33.432	4
1650			min	3179.984	7	-17.884	4	5.168	7	-600.322	4	332.587	7	-29.053	4	-116.08	5
1651	M166	1	max	4897.785	4	35.208	5	14.595	4	-104.991	4	587.851	5	-468.075	7	934.255	5
1652			min	2529.633	7	19.814	7	1.958	7	-587.85	5	104.991	4	-811.883	5	538.627	7
1653		2	max	4897.785	4	24.23	5	14.595	4	-103.011	4	379.503	5	-187.151	7	378.127	5
1654			min	2529.633	7	9.369	4	1.958	7	-379.502	5	103.011	4	-328.598	5	215.36	7
1655		3	max	4897.785	4	13.252	5	14.595	4	-150.565	7	253.882	5	-6.364	7	37.748	4
1656			min	2529.633	7	-1.609	4	1.958	7	-253.881	5	150.565	7	-32.804	4	7.324	7
1657		4	max	4897.785	4	2.274	5	14.595	4	-140.103	7	347.231	4	137.281	5	-85.481	7
1658			min	2529.633	7	-12.587	4	1.958	7	-347.231	4	140.103	7	74.284	7	-157.973	5
1659		5	max	4897.785	4	-6.534	7	14.595	4	-179.276	7	593.432	4	119.875	5	-32.491	4
1660			min	2529.633	7	-23.565	4	1.958	7	-593.431	4	179.277	7	28.236	4	-137.943	5
1661	M167	1	max	4531.84	4	29.341	5	11.707	4	-88.821	4	424.837	5	-476.121	7	951.718	5
1662			min	2317.023	7	17.068	7	2.771	7	-424.836	5	88.822	4	-805.143	5	562.799	7
1663		2	max	4531.84	4	18.454	5	11.707	4	-63.676	4	242.086	5	-166.251	7	333.742	5
1664			min	2317.023	7	8.993	4	2.771	7	-242.086	5	63.676	4	-282.342	5	196.517	7

Envelope Member Section Stresses (Continued)

	Member	Sec		Axial[psi]	LC	y Shear[psi]	LC	z Shear[psi]	LC	y-Top[psi]	LC	y-Bot[psi]	LC	z-Top[psi]	LC	z-Bot[psi]	LC
1665		3	max	4531.84	4	7.568	5	11.707	4	-93.95	7	159.646	5	36.911	5	-25.404	7
1666			min	2317.023	7	-1.893	4	2.771	7	-159.646	5	93.951	7	21.491	7	-43.63	5
1667		4	max	4531.84	4	-2.527	7	11.707	4	-112.675	7	314.317	4	152.616	5	-102.962	7
1668			min	2317.023	7	-12.78	4	2.771	7	-314.317	4	112.676	7	87.105	7	-180.4	5
1669		5	max	4531.84	4	-9.059	7	11.707	4	-191.587	7	590.104	4	64.775	5	17.703	4
1670			min	2317.023	7	-23.666	4	2.771	7	-590.103	4	191.587	7	-14.977	4	-76.567	5
1671	M168	1	max	3193.838	4	29.286	5	9.579	4	-58.418	4	381.347	5	-422.162	7	837.047	5
1672			min	1630.193	7	17.378	7	1.542	7	-381.347	5	58.418	4	-708.132	5	499.017	7
1673		2	max	3193.838	4	18.4	5	9.579	4	-7.419	4	183.538	5	-129.473	7	257.598	5
1674			min	1630.193	7	9.671	4	1.542	7	-183.538	5	7.419	4	-217.925	5	153.044	7
1675		3	max	3193.838	4	7.513	5	9.579	4	-50.044	7	86.039	5	68.735	5	-48.567	7
1676			min	1630.193	7	-1.216	4	1.542	7	-86.039	5	50.044	7	41.087	7	-81.248	5
1677		4	max	3193.838	4	-2.217	7	9.579	4	-54.588	7	206.355	4	151.847	5	-105.816	7
1678			min	1630.193	7	-12.102	4	1.542	7	-206.354	4	54.588	7	89.519	7	-179.491	5
1679		5	max	3193.838	4	-8.749	7	9.579	4	-119.318	7	456.289	4	31.412	5	36.952	4
1680			min	1630.193	7	-22.989	4	1.542	7	-456.288	4	119.318	7	-31.261	4	-37.131	5
1681	M169	1	max	1945.706	4	28.827	2	6.035	4	-113.906	4	331.77	2	-364.974	7	718.003	2
1682			min	1001.73	7	17.31	7	0.598	7	-331.769	2	113.906	4	-607.422	2	431.417	7
1683		2	max	1945.706	4	17.94	2	6.035	4	-10.861	4	125.559	2	-91.213	7	179.009	2
1684			min	1001.73	7	10.778	7	0.598	7	-125.559	2	10.861	4	-151.439	2	107.818	7
1685		3	max	1945.706	4	7.054	2	6.035	4	-8.126	4	19.972	5	101.089	5	-71.419	7
1686			min	1001.73	7	0.889	4	0.598	7	-19.971	5	8.126	4	60.42	7	-119.492	5
1687		4	max	1945.706	4	-2.286	7	6.035	4	-7.898	7	105.702	4	149.903	5	-106.295	7
1688			min	1001.73	7	-9.998	4	0.598	7	-105.702	4	7.898	7	89.924	7	-177.192	5
1689		5	max	1945.706	4	-8.817	7	6.035	4	-64.556	7	303.589	4	-2.7	7	57.424	4
1690			min	1001.73	7	-20.884	4	0.598	7	-303.589	4	64.556	7	-48.58	4	3.192	7
1691	M170	1	max	851.126	4	34.121	2	0.013	4	-244.202	7	401.9	2	-341.777	7	671.365	2
1692			min	447.328	7	20.593	7	-3.777	2	-401.899	2	244.203	7	-567.967	2	403.997	7
1693		2	max	851.126	4	23.234	2	0.013	4	-29.151	4	102.856	2	-61.918	7	121.043	2
1694			min	447.328	7	14.061	7	-3.777	2	-102.856	2	29.151	4	-102.401	2	73.19	7
1695		3	max	851.126	4	12.348	2	0.013	4	95.877	2	-58.401	7	161.601	4	-113.256	7
1696			min	447.328	7	7.484	4	-3.777	2	58.4	7	-95.877	2	95.813	7	-191.021	4
1697		4	max	851.126	4	1.461	2	0.013	4	194.299	2	-108.525	4	218.088	2	-155.34	7
1698			min	447.328	7	-3.403	4	-3.777	2	108.525	4	-194.299	2	131.416	7	-257.79	2
1699		5	max	851.126	4	-5.535	7	0.013	4	192.41	2	-26.897	4	73.011	2	-41.198	4
1700			min	447.328	7	-14.289	4	-3.777	2	26.897	4	-192.411	2	34.853	4	-86.303	2
1701	M171	1	max	0.975	4	2.946	2	-13.018	7	-38.33	4	165.832	2	103.125	4	-69.503	7
1702			min	0.527	7	-0.655	4	-21.508	2	-165.832	2	38.33	4	58.799	7	-121.899	4
1703		2	max	0.975	4	2.946	2	-6.486	7	73.268	4	-2.535	7	-88.202	7	174.733	4
1704			min	0.527	7	-0.655	4	-10.622	2	2.535	7	-73.268	4	-147.822	4	104.259	7
1705		3	max	0.975	4	2.946	2	3.563	4	85.234	5	-49.624	7	-113.076	7	230.764	4
1706			min	0.527	7	-0.655	4	0.046	7	49.624	7	-85.235	5	-195.223	4	133.661	7
1707		4	max	0.975	4	2.946	2	14.45	4	58.744	2	4.47	4	-15.821	7	46.192	4
1708			min	0.527	7	-0.655	4	6.577	7	-4.47	4	-58.744	2	-39.078	4	18.701	7
1709		5	max	0.975	4	2.946	2	25.336	4	-36.757	7	193.806	4	338.354	2	-240.62	7
1710			min	0.527	7	-0.655	4	13.109	7	-193.806	4	36.757	7	203.562	7	-399.951	2
1711	M172	1	max	-362.551	7	-0.95	7	-13.019	7	-13.178	4	161.275	2	398.05	4	-259.937	7
1712			min	-661.107	4	-6.366	4	-21.663	2	-161.274	2	13.178	4	219.904	7	-470.515	4
1713		2	max	-362.551	7	-0.95	7	-6.487	7	41.955	4	26.94	2	48.121	4	-23.379	7
1714			min	-661.107	4	-6.366	4	-10.776	2	-26.94	2	-41.955	4	19.779	7	-56.881	4
1715		3	max	-362.551	7	-0.95	7	3.98	4	7.445	5	3.223	4	-58.219	7	116.151	4
1716			min	-661.107	4	-6.366	4	0.045	7	-3.223	4	-7.445	5	-98.262	4	68.818	7
1717		4	max	-362.551	7	-0.95	7	14.867	4	-35.328	7	148.713	4	-14.088	7	48.581	4
1718			min	-661.107	4	-6.366	4	6.577	7	-148.713	4	35.328	7	-41.099	4	16.653	7
1719		5	max	-362.551	7	-0.95	7	25.753	4	-134.778	7	394.514	4	253.278	2	-179.873	7

Envelope Member Section Stresses (Continued)

	Member	Sec		Axial[psi]	LC	y Shear[psi]	LC	z Shear[psi]	LC	y-Top[psi]	LC	y-Bot[psi]	LC	z-Top[psi]	LC	z-Bot[psi]	LC
1720			min	-661.107	4	-6.366	4	13.109	7	-394.513	4	134.778	7	152.17	7	-299.387	2
1721	M173	1	max	-826.475	7	-2.841	7	-11.379	7	115.172	4	97.409	5	452.165	4	-282.549	7
1722			min	-1588.727	4	-10.941	4	-19.063	5	-97.409	5	-115.172	4	239.033	7	-534.482	4
1723		2	max	-826.475	7	-2.841	7	-3.209	4	94.088	4	14.48	5	85.833	4	-40.459	7
1724			min	-1588.727	4	-10.941	4	-8.176	5	-14.48	5	-94.088	4	34.228	7	-101.459	4
1725		3	max	-826.475	7	-2.841	7	7.677	4	-20.076	7	32.544	2	-48.449	7	94.21	2
1726			min	-1588.727	4	-10.941	4	1.685	7	-32.544	2	20.076	7	-79.701	2	57.269	7
1727		4	max	-826.475	7	-2.841	7	18.564	4	-91.873	7	249.013	4	-8.999	7	42.78	4
1728			min	-1588.727	4	-10.941	4	8.217	7	-249.013	4	91.873	7	-36.192	4	10.637	7
1729		5	max	-826.475	7	-2.841	7	29.45	4	-223.856	7	571.031	4	256.702	5	-180.357	7
1730			min	-1588.727	4	-10.941	4	14.749	7	-571.03	4	223.857	7	152.58	7	-303.434	5
1731	M174	1	max	-1411.294	7	-3.81	7	-7.713	4	217.344	4	102.564	5	470.855	4	-291.332	7
1732			min	-2851.474	4	-15.047	4	-16.392	5	-102.564	5	-217.345	4	246.464	7	-556.574	4
1733		2	max	-1411.294	7	-3.81	7	3.173	4	99.614	4	52.784	5	147.081	4	-71.434	7
1734			min	-2851.474	4	-15.047	4	-5.506	5	-52.784	5	-99.614	4	60.432	7	-173.857	4
1735		3	max	-1411.294	7	-3.81	7	14.06	4	-66.11	7	118.427	4	26.853	4	4.836	2
1736			min	-2851.474	4	-15.047	4	3.658	7	-118.427	4	66.11	7	-4.091	2	-31.741	4
1737		4	max	-1411.294	7	-3.81	7	24.946	4	-165.013	7	436.78	4	110.172	4	-64.72	7
1738			min	-2851.474	4	-15.047	4	10.19	7	-436.779	4	165.013	7	54.753	7	-130.228	4
1739		5	max	-1411.294	7	-3.81	7	35.833	4	-324.103	7	855.444	4	397.948	5	-277.905	7
1740			min	-2851.474	4	-15.047	4	16.722	7	-855.442	4	324.103	7	235.105	7	-470.395	5
1741	M175	1	max	-1758.638	7	21.629	5	-2.865	7	-202.409	7	440.064	4	48.598	4	266.131	5
1742			min	-3720.48	4	12.613	7	-9.407	4	-440.063	4	202.409	7	-231.272	5	-55.923	4
1743		2	max	-1758.638	7	10.651	5	-2.865	7	-110.592	7	265.526	4	114.684	4	50.406	5
1744			min	-3720.48	4	6.026	7	-9.407	4	-265.525	4	110.593	7	-43.804	5	-131.97	4
1745		3	max	-1758.638	7	-0.327	5	-2.865	7	-68.412	7	173.715	4	13.874	4	29.611	2
1746			min	-3720.48	4	-2.713	4	-9.407	4	-173.714	4	68.412	7	-25.732	2	-15.965	4
1747		4	max	-1758.638	7	-7.147	7	-2.865	7	-75.868	7	164.63	4	-119.941	7	292.093	4
1748			min	-3720.48	4	-13.691	4	-9.407	4	-164.63	4	75.868	7	-253.833	4	138.019	7
1749		5	max	-1758.638	7	-13.734	7	-2.865	7	-132.959	7	238.273	4	-322.218	7	792.203	4
1750			min	-3720.48	4	-24.669	4	-9.407	4	-238.272	4	132.96	7	-688.437	4	370.785	7
1751	M176	1	max	-2477.349	7	-10.538	7	0.531	4	404.269	4	-4.172	5	750.859	4	-370.687	7
1752			min	-5460.22	4	-30.33	4	-6.486	5	4.172	5	-404.27	4	322.133	7	-864.033	4
1753		2	max	-2477.349	7	-10.538	7	11.509	4	130.345	4	114.099	5	381.268	4	-176.018	7
1754			min	-5460.22	4	-30.33	4	2.704	7	-114.099	5	-130.345	4	152.963	7	-438.736	4
1755		3	max	-2477.349	7	-10.538	7	22.487	4	-164.822	7	315.098	5	178.574	4	-96.581	7
1756			min	-5460.22	4	-30.33	4	9.291	7	-315.097	5	164.822	7	83.93	7	-205.49	4
1757		4	max	-2477.349	7	-10.538	7	33.465	4	-339.064	7	665.687	4	215.384	5	-132.374	7
1758			min	-5460.22	4	-30.33	4	15.878	7	-665.686	4	339.065	7	115.035	7	-247.848	5
1759		5	max	-2477.349	7	-10.538	7	44.443	4	-562.943	7	1187.794	4	447.154	5	-283.399	7
1760			min	-5460.22	4	-30.33	4	22.464	7	-1187.791	4	562.944	7	246.278	7	-514.552	5
1761	M177	1	max	-3792.836	7	13.56	4	107.027	4	481.279	4	166.203	2	216.908	2	962.969	4
1762			min	-8615.176	4	-40.677	2	24.32	7	-166.203	2	-481.28	4	-836.836	4	-249.601	2
1763		2	max	-3792.836	7	13.56	4	113.015	4	84.789	4	494.948	2	205.498	2	-171.241	7
1764			min	-8615.176	4	-40.677	2	27.912	7	-494.947	2	-84.789	4	148.811	7	-236.473	2
1765		3	max	-3792.836	7	13.56	4	119.003	4	-336.315	4	848.306	2	1262.387	4	-176.709	7
1766			min	-8615.176	4	-40.677	2	31.505	7	-848.304	2	336.316	4	153.563	7	-1452.663	4
1767		4	max	-3792.836	7	13.56	4	124.991	4	-782.032	4	1226.277	2	2386.481	4	-216.462	7
1768			min	-8615.176	4	-40.677	2	35.098	7	-1226.274	2	782.033	4	188.109	7	-2746.188	4
1769		5	max	-3792.836	7	13.56	4	130.979	4	-1102.299	7	1628.861	2	3560.23	4	-290.498	7
1770			min	-8615.176	4	-40.677	2	38.691	7	-1628.858	2	1102.301	7	252.447	7	-4096.852	4
1771	M178	1	max	-3565.807	4	18.804	4	78.973	4	187.499	7	450.093	6	1206.648	5	2839.932	4
1772			min	-6077.409	5	-32.479	2	-32.307	5	-450.092	6	-187.5	7	-2467.946	4	-1388.522	5
1773		2	max	-3565.807	4	18.804	4	84.961	4	32.957	7	632.678	4	762.445	5	1878.342	4
1774			min	-6077.409	5	-32.479	2	-26.319	5	-632.677	4	-32.957	7	-1632.309	4	-877.366	5

Envelope Member Section Stresses (Continued)

	Member	Sec		Axial[psi]	LC	y Shear[psi]	LC	z Shear[psi]	LC	y-Top[psi]	LC	y-Bot[psi]	LC	z-Top[psi]	LC	z-Bot[psi]	LC
1775		3	max	-3565.807	4	18.804	4	90.949	4	-136.354	7	916.914	4	367.897	5	859.612	4
1776			min	-6077.409	5	-32.479	2	-20.331	5	-916.912	4	136.354	7	-747.017	4	-423.349	5
1777		4	max	-3565.807	4	18.804	4	96.937	4	-320.432	7	1225.763	4	187.93	4	-26.471	5
1778			min	-6077.409	5	-32.479	2	-14.343	5	-1225.761	4	320.433	7	23.004	5	-216.257	4
1779		5	max	-3565.807	4	18.804	4	102.925	4	-503.18	5	1559.225	4	1172.533	4	313.267	5
1780			min	-6077.409	5	-32.479	2	-8.355	5	-1559.222	4	503.181	5	-272.234	5	-1349.265	4
1781	M179	1	max	-2454.017	4	-2.929	7	-17.239	7	-372.379	7	574.16	2	958.923	4	-546.377	7
1782			min	-4169.141	5	-15.499	4	-27.91	2	-574.159	2	372.38	7	474.811	7	-1103.458	4
1783		2	max	-2454.017	4	-2.929	7	-10.652	7	-289.359	7	443.146	2	451.037	4	-251.179	7
1784			min	-4169.141	5	-15.499	4	-16.932	2	-443.145	2	289.359	7	218.279	7	-519.021	4
1785		3	max	-2454.017	4	-2.929	7	-1.441	4	-255.975	7	462.438	4	110.048	4	-71.212	7
1786			min	-4169.141	5	-15.499	4	-5.954	2	-462.437	4	255.975	7	61.884	7	-126.636	4
1787		4	max	-2454.017	4	-2.929	7	9.537	4	-272.227	7	609.737	4	5.97	2	73.698	4
1788			min	-4169.141	5	-15.499	4	2.522	7	-609.736	4	272.228	7	-64.045	4	-6.87	2
1789		5	max	-2454.017	4	-2.929	7	20.515	4	-338.116	7	839.763	4	92.949	5	81.98	4
1790			min	-4169.141	5	-15.499	4	9.108	7	-839.761	4	338.117	7	-71.242	4	-106.959	5
1791	M180	1	max	-1901.704	7	-4.281	7	-13.646	7	-128.37	4	386.774	5	598.658	5	-400.748	7
1792			min	-3162.845	2	-13.837	4	-25.686	5	-386.773	5	128.371	4	348.256	7	-688.892	5
1793		2	max	-1901.704	7	-4.281	7	-2.916	4	-127.177	7	270.35	5	219.446	5	-144.714	4
1794			min	-3162.845	2	-13.837	4	-14.708	5	-270.35	5	127.178	7	125.759	4	-252.522	5
1795		3	max	-1901.704	7	-4.281	7	8.062	4	-131.056	7	292.974	4	7.129	5	52.342	4
1796			min	-3162.845	2	-13.837	4	-3.73	5	-292.973	4	131.056	7	-45.486	4	-8.204	5
1797		4	max	-1901.704	7	-4.281	7	19.04	4	-184.571	7	499.366	4	-18.751	7	57.346	4
1798			min	-3162.845	2	-13.837	4	6.114	7	-499.365	4	184.571	7	-49.835	4	21.577	7
1799		5	max	-1901.704	7	-4.281	7	30.018	4	-287.722	7	788.486	4	112.713	4	-68.11	7
1800			min	-3162.845	2	-13.837	4	12.701	7	-788.484	4	287.722	7	59.189	7	-129.702	4
1801	M181	1	max	-1633.042	7	-3.436	7	-13.596	7	-45.948	4	300.848	5	629.203	5	-445.36	7
1802			min	-2705.991	2	-12.599	4	-23.341	5	-300.848	5	45.948	4	376.769	7	-743.749	5
1803		2	max	-1633.042	7	-3.436	7	-4.212	4	-73.066	4	183.249	5	198.754	2	-141.122	7
1804			min	-2705.991	2	-12.599	4	-12.454	5	-183.248	5	73.066	4	119.387	7	-234.937	2
1805		3	max	-1633.042	7	-3.436	7	6.674	4	-98.721	7	200.495	4	-15.867	7	51.996	4
1806			min	-2705.991	2	-12.599	4	-1.568	5	-200.495	4	98.721	7	-43.988	4	18.755	7
1807		4	max	-1633.042	7	-3.436	7	17.561	4	-155.574	7	428.235	4	-28.993	7	62.638	4
1808			min	-2705.991	2	-12.599	4	6	7	-428.235	4	155.574	7	-52.991	4	34.271	7
1809		5	max	-1633.042	7	-3.436	7	28.447	4	-272.614	7	756.287	4	141.552	4	-94.575	7
1810			min	-2705.991	2	-12.599	4	12.532	7	-756.285	4	272.615	7	80.009	7	-167.321	4
1811	M182	1	max	-1020.358	7	-2.237	7	-13.748	7	36.482	4	233.071	5	519.312	2	-368.281	7
1812			min	-1688.142	2	-10.354	4	-23.208	5	-233.07	5	-36.482	4	311.561	7	-613.852	2
1813		2	max	-1020.358	7	-2.237	7	-4.694	4	34.483	4	101.306	5	122.592	2	-87.178	7
1814			min	-1688.142	2	-10.354	4	-12.322	5	-101.306	5	-34.484	4	73.752	7	-144.909	2
1815		3	max	-1020.358	7	-2.237	7	6.193	4	-40.088	7	69.853	5	-41.929	7	91.211	4
1816			min	-1688.142	2	-10.354	4	-1.435	5	-69.853	5	40.088	7	-77.163	4	49.562	7
1817		4	max	-1020.358	7	-2.237	7	17.079	4	-84.485	7	270.447	4	-35.483	7	71.992	5
1818			min	-1688.142	2	-10.354	4	5.848	7	-270.446	4	84.486	7	-60.905	5	41.942	7
1819		5	max	-1020.358	7	-2.237	7	27.966	4	-189.07	7	573.379	4	174.334	4	-110.04	7
1820			min	-1688.142	2	-10.354	4	12.379	7	-573.378	4	189.07	7	93.092	7	-206.071	4
1821	M183	1	max	-475.232	7	-0.589	7	-14.298	7	-37.412	4	233.765	2	426.386	2	-302.667	7
1822			min	-785.431	2	-5.942	4	-23.789	2	-233.765	2	37.412	4	256.053	7	-504.01	2
1823		2	max	-475.232	7	-0.589	7	-7.536	4	27.426	4	74.17	2	64.196	2	-45.814	7
1824			min	-785.431	2	-5.942	4	-12.903	2	-74.17	2	-27.427	4	38.758	7	-75.883	2
1825		3	max	-475.232	7	-0.589	7	3.351	4	-8.046	4	15.282	5	-56.408	7	112.416	4
1826			min	-785.431	2	-5.942	4	-2.016	2	-15.282	5	8.046	4	-95.103	4	66.677	7
1827		4	max	-475.232	7	-0.589	7	14.237	4	-32.799	7	143.829	4	-29.447	7	58.924	5
1828			min	-785.431	2	-5.942	4	5.297	7	-143.829	4	32.799	7	-49.849	5	34.808	7
1829		5	max	-475.232	7	-0.589	7	25.124	4	-117.133	7	379.924	4	215.082	4	-141.423	7

Envelope Member Section Stresses (Continued)

	Member	Sec		Axial[psi]	LC	y Shear[psi]	LC	z Shear[psi]	LC	y-Top[psi]	LC	y-Bot[psi]	LC	z-Top[psi]	LC	z-Bot[psi]	LC
1830			min	-785.431	2	-5.942	4	11.829	7	-379.923	4	117.133	7	119.642	7	-254.237	4
1831	M184	1	max	-5.124	4	3.954	2	-18.92	7	-173.362	4	329.049	2	423.881	2	-300.887	7
1832			min	-35.399	2	0.024	4	-31.326	2	-329.048	2	173.362	4	254.547	7	-501.048	2
1833		2	max	-5.124	4	3.954	2	-12.388	7	24.231	4	54.127	2	13.862	2	-9.877	7
1834			min	-35.399	2	0.024	4	-20.44	2	-54.126	2	-24.231	4	8.356	7	-16.386	2
1835		3	max	-5.124	4	3.954	2	-5.09	4	121.512	4	-73.008	7	-115.707	7	227.675	2
1836			min	-35.399	2	0.024	4	-9.553	2	73.008	7	-121.512	4	-192.611	2	136.771	7
1837		4	max	-5.124	4	3.954	2	5.796	4	194.784	2	-118.483	4	-117.642	7	231.134	2
1838			min	-35.399	2	0.024	4	0.676	7	118.483	4	-194.784	2	-195.537	2	139.058	7
1839		5	max	-5.124	4	3.954	2	16.683	4	168.772	2	-15.142	4	29.867	4	-3.016	7
1840			min	-35.399	2	0.024	4	7.207	7	15.142	4	-168.773	2	2.551	7	-35.305	4
1841	M185	1	max	-23.182	7	88.918	4	-30.233	7	-510.722	5	2062.57	4	492.891	5	331.517	4
1842			min	-51.209	4	16.66	5	-78.072	4	-2062.566	4	510.723	5	-269.569	4	-606.16	5
1843		2	max	-24.741	7	88.918	4	-30.233	7	-196.836	5	996.359	4	292.682	5	162.941	4
1844			min	-53.808	4	16.66	5	-78.072	4	-996.358	4	196.837	5	-132.493	4	-359.942	5
1845		3	max	-26.3	7	88.918	4	-30.233	7	117.049	5	-29.608	7	92.473	5	-5.635	4
1846			min	-56.407	4	16.66	5	-78.072	4	29.608	7	-117.049	5	4.582	4	-113.723	5
1847		4	max	-27.86	7	88.918	4	-30.233	7	1136.059	4	-379.473	7	141.657	4	132.495	5
1848			min	-59.006	4	16.66	5	-78.072	4	379.473	7	-1136.061	4	-107.736	5	-174.211	4
1849		5	max	-29.419	7	88.918	4	-30.233	7	2202.268	4	-729.338	7	278.732	4	378.713	5
1850			min	-61.605	4	16.66	5	-78.072	4	729.337	7	-2202.272	4	-307.945	5	-342.786	4
1851	M186	1	max	-19.243	7	14.356	4	25.255	5	608.398	5	762.15	4	888.996	4	-93.973	5
1852			min	-40.604	5	-28.449	5	-46.22	4	-762.148	4	-608.399	5	76.413	5	-1093.292	4
1853		2	max	-20.802	7	14.356	4	25.255	5	265.504	5	375.381	4	486.284	4	-44.337	5
1854			min	-43.203	5	-28.449	5	-46.22	4	-375.38	4	-265.504	5	36.052	5	-598.034	4
1855		3	max	-22.362	7	14.356	4	25.255	5	11.387	4	77.391	5	83.572	4	5.298	5
1856			min	-45.802	5	-28.449	5	-46.22	4	-77.391	5	-11.387	4	-4.308	5	-102.777	4
1857		4	max	-23.921	7	14.356	4	25.255	5	398.155	4	420.285	5	-44.669	5	392.481	4
1858			min	-48.401	5	-28.449	5	-46.22	4	-420.285	5	-398.156	4	-319.14	4	54.934	5
1859		5	max	-25.481	7	14.356	4	25.255	5	784.923	4	763.18	5	-85.03	5	887.738	4
1860			min	-51	5	-28.449	5	-46.22	4	-763.179	5	-784.924	4	-721.853	4	104.57	5
1861	M187	1	max	1275.198	4	118.407	4	-34.117	7	-832.157	7	2777.895	4	348.853	5	847.376	4
1862			min	614.031	7	29.979	7	-94.436	4	-2777.89	4	832.159	7	-689.033	4	-429.021	5
1863		2	max	1272.599	4	118.407	4	-34.117	7	-422.917	7	1418.921	4	145.292	5	474.785	4
1864			min	612.471	7	29.979	7	-94.436	4	-1418.918	4	422.917	7	-386.066	4	-178.68	5
1865		3	max	1270	4	118.407	4	-34.117	7	-13.676	7	59.947	4	-34.262	7	102.195	4
1866			min	610.912	7	29.979	7	-94.436	4	-59.947	4	13.676	7	-83.098	4	42.136	7
1867		4	max	1267.401	4	118.407	4	-34.117	7	1299.024	4	-395.566	7	219.869	4	322.001	5
1868			min	609.353	7	29.979	7	-94.436	4	395.565	7	-1299.026	4	-261.831	5	-270.396	4
1869		5	max	1264.802	4	118.407	4	-34.117	7	2657.995	4	-804.807	7	522.836	4	572.341	5
1870			min	607.793	7	29.979	7	-94.436	4	804.806	7	-2658	4	-465.392	5	-642.987	4
1871	M188	1	max	962.185	5	18.679	4	1.291	5	138.838	5	1439.593	4	1605.562	4	-486.951	7
1872			min	565.064	7	-17.822	5	-81.647	4	-1439.59	4	-138.838	5	395.958	7	-1974.528	4
1873		2	max	959.586	5	18.679	4	1.291	5	16.803	5	799.019	4	809.735	4	-236.739	7
1874			min	563.505	7	-17.822	5	-81.647	4	-799.017	4	-16.803	5	192.501	7	-995.816	4
1875		3	max	956.987	5	18.679	4	1.291	5	-64.377	7	158.444	4	13.909	4	19.337	2
1876			min	561.946	7	-17.822	5	-81.647	4	-158.444	4	64.377	7	-15.724	2	-17.105	4
1877		4	max	954.388	5	18.679	4	1.291	5	482.129	4	227.266	5	-214.411	7	961.607	4
1878			min	560.386	7	-17.822	5	-81.647	4	-227.266	5	-482.13	4	-781.918	4	263.684	7
1879		5	max	951.789	5	18.679	4	1.291	5	1122.703	4	349.301	5	-417.867	7	1940.318	4
1880			min	558.827	7	-17.822	5	-81.647	4	-349.3	5	-1122.705	4	-1577.745	4	513.895	7
1881	M189	1	max	1071.22	4	109.903	4	-25.081	7	-636.148	7	2451.693	4	133.221	5	1062.132	4
1882			min	531.085	7	24.174	7	-76.307	4	-2451.688	4	636.15	7	-863.659	4	-163.836	5
1883		2	max	1068.621	4	109.903	4	-25.081	7	-321.661	7	1262.766	4	58.04	5	539.948	4
1884			min	529.526	7	24.174	7	-76.307	4	-1262.763	4	321.661	7	-439.052	4	-71.378	5

Envelope Member Section Stresses (Continued)

	Member	Sec		Axial[psi]	LC	y Shear[psi]	LC	z Shear[psi]	LC	y-Top[psi]	LC	y-Bot[psi]	LC	z-Top[psi]	LC	z-Bot[psi]	LC
1885		3	max	1066.022	4	109.903	4	-25.081	7	-7.173	7	73.839	4	-9.313	7	21.08	5
1886			min	527.967	7	24.174	7	-76.307	4	-73.839	4	7.173	7	-17.141	5	11.453	7
1887		4	max	1063.423	4	109.903	4	-25.081	7	1115.086	4	-307.316	7	410.162	4	113.539	5
1888			min	526.407	7	24.174	7	-76.307	4	307.315	7	-1115.088	4	-92.322	5	-504.42	4
1889		5	max	1060.824	4	109.903	4	-25.081	7	2304.011	4	-621.804	7	834.77	4	205.997	5
1890			min	524.848	7	24.174	7	-76.307	4	621.803	7	-2304.015	4	-167.504	5	-1026.604	4
1891	M190	1	max	861.047	5	24.11	4	-1.154	5	40.199	5	1448.923	4	1427.168	4	-312.628	7
1892			min	514.238	7	-10.743	5	-79.604	4	-1448.921	4	-40.199	5	254.209	7	-1755.138	4
1893		2	max	858.448	5	24.11	4	-1.154	5	-21.025	5	786.726	4	725.804	4	-153.508	7
1894			min	512.679	7	-10.743	5	-79.604	4	-786.724	4	21.025	5	124.823	7	-892.597	4
1895		3	max	855.85	5	24.11	4	-1.154	5	-46.725	7	124.528	4	24.439	4	11.444	5
1896			min	511.12	7	-10.743	5	-79.604	4	-124.528	4	46.725	7	-9.305	5	-30.056	4
1897		4	max	853.251	5	24.11	4	-1.154	5	537.669	4	143.472	5	-133.95	7	832.486	4
1898			min	509.56	7	-10.743	5	-79.604	4	-143.472	5	-537.67	4	-676.925	4	164.732	7
1899		5	max	850.652	5	24.11	4	-1.154	5	1199.865	4	204.696	5	-263.336	7	1695.027	4
1900			min	508.001	7	-10.743	5	-79.604	4	-204.696	5	-1199.867	4	-1378.289	4	323.853	7
1901	M191	1	max	862.414	4	96.184	4	-24.392	7	-581.424	7	2168.869	4	110.337	5	824.865	4
1902			min	446.116	7	21.475	7	-72.924	4	-2168.864	4	581.426	7	-670.728	4	-135.693	5
1903		2	max	859.815	4	96.184	4	-24.392	7	-288.573	7	1089.135	4	27.147	5	463.318	4
1904			min	444.556	7	21.475	7	-72.924	4	-1089.133	4	288.573	7	-376.741	4	-33.385	5
1905		3	max	857.216	4	96.184	4	-24.392	7	5.861	2	9.402	4	-33.932	7	101.771	4
1906			min	442.997	7	21.475	7	-72.924	4	-9.402	4	-5.861	2	-82.753	4	41.729	7
1907		4	max	854.617	4	96.184	4	-24.392	7	1070.329	4	-297.131	7	211.234	4	171.23	5
1908			min	441.438	7	21.475	7	-72.924	4	297.131	7	-1070.331	4	-139.234	5	-259.777	4
1909		5	max	852.018	4	96.184	4	-24.392	7	2150.06	4	-589.984	7	505.221	4	273.538	5
1910			min	439.878	7	21.475	7	-72.924	4	589.983	7	-2150.064	4	-222.424	5	-621.324	4
1911	M192	1	max	764.366	2	16.079	4	-4.301	5	-15.62	5	1159.574	4	1284.506	4	-271.665	7
1912			min	458.809	7	-9.143	5	-67.214	4	-1159.572	4	15.62	5	220.901	7	-1579.691	4
1913		2	max	761.767	2	16.079	4	-4.301	5	-45.481	7	627.758	4	638.222	4	-125.361	7
1914			min	457.249	7	-9.143	5	-67.214	4	-627.757	4	45.481	7	101.936	7	-784.888	4
1915		3	max	759.168	2	16.079	4	-4.301	5	-45.174	7	95.942	4	-8.062	4	35.105	5
1916			min	455.69	7	-9.143	5	-67.214	4	-95.942	4	45.174	7	-28.545	5	9.915	4
1917		4	max	756.569	2	16.079	4	-4.301	5	435.873	4	108.366	5	-135.994	7	804.717	4
1918			min	454.13	7	-9.143	5	-67.214	4	-108.366	5	-435.873	4	-654.346	4	167.246	7
1919		5	max	753.97	2	16.079	4	-4.301	5	967.687	4	139.281	5	-254.959	7	1599.52	4
1920			min	452.571	7	-9.143	5	-67.214	4	-139.281	5	-967.689	4	-1300.629	4	313.55	7
1921	M193	1	max	685.925	4	73.144	4	-18.343	7	-426.862	7	1652.257	4	83.538	5	614.81	4
1922			min	370.02	7	15.411	7	-55.754	4	-1652.253	4	426.863	7	-499.925	4	-102.735	5
1923		2	max	683.326	4	73.144	4	-18.343	7	-211.347	7	829.258	4	18.95	5	344.502	4
1924			min	368.461	7	15.411	7	-55.754	4	-829.257	4	211.347	7	-280.127	4	-23.305	5
1925		3	max	680.727	4	73.144	4	-18.343	7	6.459	2	6.26	4	-27.184	7	74.193	4
1926			min	366.901	7	15.411	7	-55.754	4	-6.26	4	-6.459	2	-60.329	4	33.43	7
1927		4	max	678.128	4	73.144	4	-18.343	7	816.737	4	-219.684	7	159.469	4	135.556	5
1928			min	365.342	7	15.411	7	-55.754	4	219.684	7	-816.739	4	-110.226	5	-196.116	4
1929		5	max	675.529	4	73.144	4	-18.343	7	1639.734	4	-435.2	7	379.267	4	214.987	5
1930			min	363.783	7	15.411	7	-55.754	4	435.199	7	-1639.737	4	-174.814	5	-466.425	4
1931	M194	1	max	667.682	2	10.029	4	0.339	5	77.409	5	801.198	4	932.729	4	-166.875	7
1932			min	401.681	7	-9.965	5	-47.302	4	-801.197	4	-77.409	5	135.693	7	-1147.075	4
1933		2	max	665.083	2	10.029	4	0.339	5	11.62	5	435.147	4	461.657	4	-74.097	7
1934			min	400.122	7	-9.965	5	-47.302	4	-435.147	4	-11.62	5	60.251	7	-567.749	4
1935		3	max	662.484	2	10.029	4	0.339	5	-31.975	7	69.097	4	-9.414	4	31.006	2
1936			min	398.562	7	-9.965	5	-47.302	4	-69.096	4	31.975	7	-25.212	2	11.578	4
1937		4	max	659.885	2	10.029	4	0.339	5	296.954	4	119.96	5	-90.631	7	590.904	4
1938			min	397.003	7	-9.965	5	-47.302	4	-119.96	5	-296.954	4	-480.486	4	111.458	7
1939		5	max	657.286	2	10.029	4	0.339	5	663.004	4	185.75	5	-166.072	7	1170.231	4

Envelope Member Section Stresses (Continued)

	Member	Sec		Axial[psi]	LC	y Shear[psi]	LC	z Shear[psi]	LC	y-Top[psi]	LC	y-Bot[psi]	LC	z-Top[psi]	LC	z-Bot[psi]	LC
1940			min	395.444	7	-9.965	5	-47.302	4	-185.75	5	-663.005	4	-951.558	4	204.236	7
1941	M195	1	max	530.46	4	46.077	4	-13.32	7	-241.851	7	1091.752	4	226.148	2	222.902	4
1942			min	299.884	7	6.763	7	-40.935	4	-1091.75	4	241.851	7	-181.25	4	-278.118	2
1943		2	max	527.861	4	46.077	4	-13.32	7	-113.627	7	536.192	4	92.113	2	142.99	4
1944			min	298.325	7	6.763	7	-40.935	4	-536.191	4	113.627	7	-116.27	4	-113.282	2
1945		3	max	525.262	4	46.077	4	-13.32	7	23.995	2	-14.597	7	-24.959	7	63.078	4
1946			min	296.766	7	6.763	7	-40.935	4	14.597	7	-23.995	2	-51.291	4	30.694	7
1947		4	max	522.663	4	46.077	4	-13.32	7	574.927	4	-142.821	7	13.688	4	216.391	2
1948			min	295.206	7	6.763	7	-40.935	4	142.821	7	-574.928	4	-175.956	2	-16.833	4
1949		5	max	520.064	4	46.077	4	-13.32	7	1130.486	4	-271.045	7	78.667	4	381.228	2
1950			min	293.647	7	6.763	7	-40.935	4	271.045	7	-1130.488	4	-309.991	2	-96.745	4
1951	M196	1	max	557.866	2	-2.714	4	13.726	2	354.12	2	279.177	4	564.083	4	-38.514	7
1952			min	335.651	7	-17.562	2	-20.6	4	-279.176	4	-354.12	2	31.317	7	-693.712	4
1953		2	max	555.267	2	-2.714	4	13.726	2	154.349	2	164.973	4	269.432	4	-6.063	7
1954			min	334.092	7	-17.562	2	-20.6	4	-164.973	4	-154.349	2	4.93	7	-331.349	4
1955		3	max	552.668	2	-2.714	4	13.726	2	-27.094	7	50.769	4	-21.456	7	43.586	2
1956			min	332.532	7	-17.562	2	-20.6	4	-50.769	4	27.094	7	-35.441	2	26.387	7
1957		4	max	550.069	2	-2.714	4	13.726	2	63.434	4	245.194	2	-47.843	7	393.376	4
1958			min	330.973	7	-17.562	2	-20.6	4	-245.193	2	-63.435	4	-319.869	4	58.838	7
1959		5	max	547.47	2	-2.714	4	13.726	2	177.638	4	444.965	2	-74.23	7	755.739	4
1960			min	329.413	7	-17.562	2	-20.6	4	-444.964	2	-177.638	4	-614.519	4	91.288	7
1961	M197	1	max	23.65	4	-0.068	4	12.996	2	390.534	2	-55.885	4	142.247	2	182.776	4
1962			min	10.052	7	-18.992	2	5.425	4	55.885	4	-390.535	2	-148.622	4	-174.937	2
1963		2	max	21.051	4	-0.068	4	12.996	2	186.295	2	-20.814	4	66.471	2	99.517	4
1964			min	8.492	7	-18.992	2	5.425	4	20.814	4	-186.296	2	-80.921	4	-81.747	2
1965		3	max	18.452	4	-0.068	4	12.996	2	-10.956	7	17.943	2	-5.534	7	16.258	4
1966			min	6.933	7	-18.992	2	5.425	4	-17.943	2	10.956	7	-13.22	4	6.806	7
1967		4	max	15.853	4	-0.068	4	12.996	2	-49.33	4	222.182	2	54.481	4	104.633	2
1968			min	5.374	7	-18.992	2	5.425	4	-222.181	2	49.33	4	-85.081	2	-67.001	4
1969		5	max	13.254	4	-0.068	4	12.996	2	-84.402	4	426.421	2	122.181	4	197.823	2
1970			min	3.814	7	-18.992	2	5.425	4	-426.42	2	84.402	4	-160.857	2	-150.259	4
1971	M198	1	max	42.475	2	2.905	4	30.278	2	438.693	2	-102.689	4	-327.252	4	825.608	2
1972			min	25.801	7	-3.556	2	10.278	4	102.689	4	-438.694	2	-671.333	2	402.456	4
1973		2	max	39.876	2	2.905	4	30.278	2	222.669	2	-55.61	4	-160.638	4	410.273	2
1974			min	24.241	7	-3.556	2	10.278	4	55.61	4	-222.669	2	-333.608	2	197.554	4
1975		3	max	37.277	2	2.905	4	30.278	2	8.532	4	-3.84	7	5.976	4	-3.024	7
1976			min	22.682	7	-3.556	2	10.278	4	3.84	7	-8.532	4	2.459	7	-7.349	4
1977		4	max	34.678	2	2.905	4	30.278	2	-38.547	4	209.38	2	341.84	2	-212.251	4
1978			min	21.123	7	-3.556	2	10.278	4	-209.379	2	38.547	4	172.59	4	-420.397	2
1979		5	max	32.079	2	2.905	4	30.278	2	-85.625	4	425.404	2	679.564	2	-417.154	4
1980			min	19.563	7	-3.556	2	10.278	4	-425.404	2	85.625	4	339.203	4	-835.732	2
1981	M199	1	max	-1371.314	7	21.403	5	10.936	4	249.47	4	158.738	5	-416.329	7	1020.651	4
1982			min	-2890.803	4	12.001	7	1.795	5	-158.737	5	-249.47	4	-829.929	4	512.004	7
1983		2	max	-1369.754	7	10.608	5	10.936	4	233.753	4	-30.751	5	-126.456	7	348.984	4
1984			min	-2888.204	4	4.36	4	1.795	5	30.751	5	-233.753	4	-283.772	4	155.516	7
1985		3	max	-1368.195	7	-0.187	5	10.936	4	76.301	5	-38.335	7	-7.534	7	43.306	5
1986			min	-2885.605	4	-6.435	4	1.795	5	38.335	7	-76.301	5	-35.213	5	9.265	7
1987		4	max	-1366.636	7	-7.43	7	10.936	4	-22.086	5	229.494	4	-46.216	4	166.312	5
1988			min	-2883.006	4	-17.231	4	1.795	5	-229.494	4	22.086	5	-135.235	5	56.836	4
1989		5	max	-1365.076	7	-13.907	7	10.936	4	-219.021	7	677.024	4	-282.545	7	639.714	5
1990			min	-2880.407	4	-28.026	4	1.795	5	-677.023	4	219.021	7	-520.175	5	347.476	7
1991	M200	1	max	-1190.041	7	20.627	5	9.309	4	144.831	4	177.48	5	-297.983	7	849.109	4
1992			min	-2441.428	4	12.274	7	0.501	5	-177.48	5	-144.831	4	-690.442	4	366.461	7
1993		2	max	-1188.482	7	9.832	5	9.309	4	164.35	4	-9.124	7	-37.87	7	197.28	4
1994			min	-2438.829	4	5.375	4	0.501	5	9.124	7	-164.351	4	-160.416	4	46.572	7

Envelope Member Section Stresses (Continued)

	Member	Sec		Axial[psi]	LC	y Shear[psi]	LC	z Shear[psi]	LC	y-Top[psi]	LC	y-Bot[psi]	LC	z-Top[psi]	LC	z-Bot[psi]	LC
1995		3	max	-1186.923	7	-0.68	7	9.309	4	71.349	5	-32.316	7	84.69	4	-63.079	7
1996			min	-2436.23	4	-5.42	4	0.501	5	32.316	7	-71.349	5	51.292	7	-104.153	4
1997		4	max	-1185.363	7	-7.157	7	9.309	4	-20.143	5	228.424	4	44.877	4	91.83	5
1998			min	-2433.631	4	-16.215	4	0.501	5	-228.423	4	20.143	5	-74.67	5	-55.19	4
1999		5	max	-1183.804	7	-13.634	7	9.309	4	-180.388	7	640.717	4	-279.855	4	632.41	5
2000			min	-2431.032	4	-27.01	4	0.501	5	-640.716	4	180.388	7	-514.236	5	344.167	4
2001	M201	1	max	-1010.256	7	20.914	5	9.05	4	67.517	4	119.25	5	-361.894	7	999.313	4
2002			min	-1995.884	4	12.524	7	1.668	7	-119.25	5	-67.517	4	-812.578	4	445.059	7
2003		2	max	-1008.696	7	10.119	5	9.05	4	123.513	4	-31.138	7	-72.803	7	275.479	4
2004			min	-1993.285	4	6.047	7	1.668	7	31.138	7	-123.513	4	-224.002	4	89.533	7
2005		3	max	-1007.137	7	-0.43	7	9.05	4	85.282	5	-35.572	4	79.655	4	-55.756	7
2006			min	-1990.686	4	-2.943	4	1.668	7	35.572	4	-85.282	5	45.337	7	-97.96	4
2007		4	max	-1005.578	7	-6.907	7	9.05	4	-24.824	7	196.307	4	98.392	4	30.133	5
2008			min	-1988.087	4	-13.738	4	1.668	7	-196.307	4	24.824	7	-24.503	5	-121.003	4
2009		5	max	-1004.018	7	-13.385	7	9.05	4	-182.348	7	572.124	4	-167.79	4	498.152	5
2010			min	-1985.488	4	-24.533	4	1.668	7	-572.123	4	182.349	7	-405.066	5	206.349	4
2011	M202	1	max	-846.545	7	20.517	5	6.698	4	48.636	4	130.864	2	-268.331	7	706.021	4
2012			min	-1604.942	4	12.297	7	0.896	7	-130.864	2	-48.636	4	-574.092	4	329.995	7
2013		2	max	-844.986	7	9.722	5	6.698	4	127.493	4	-30.509	7	-5.589	7	79.226	4
2014			min	-1602.343	4	5.82	7	0.896	7	30.509	7	-127.494	4	-64.422	4	6.873	7
2015		3	max	-843.427	7	-0.657	7	6.698	4	90.661	5	-52.976	7	160.329	4	-106.011	7
2016			min	-1599.744	4	-3.58	4	0.896	7	52.976	7	-90.661	5	86.201	7	-197.174	4
2017		4	max	-841.867	7	-7.134	7	6.698	4	-10.919	7	146.603	4	100.161	4	-8.658	7
2018			min	-1597.145	4	-14.375	4	0.896	7	-146.603	4	10.919	7	7.04	7	-123.178	4
2019		5	max	-840.308	7	-13.611	7	6.698	4	-161.177	7	499.558	4	-243.073	7	504.214	5
2020			min	-1594.546	4	-25.17	4	0.896	7	-499.557	4	161.177	7	-409.995	5	298.932	7
2021	M203	1	max	-693.532	7	20.866	2	4.419	4	-43.987	4	158.771	2	-239.099	7	610.909	4
2022			min	-1256.861	4	12.539	7	0.41	7	-158.771	2	43.987	4	-496.752	4	294.045	7
2023		2	max	-691.973	7	10.071	2	4.419	4	82.208	4	-21.581	7	27.731	2	16.807	4
2024			min	-1254.262	4	6.062	7	0.41	7	21.581	7	-82.209	4	-13.667	4	-34.103	2
2025		3	max	-690.413	7	-0.415	7	4.419	4	90.451	5	-53.758	7	184.5	4	-126.091	7
2026			min	-1251.663	4	-2.309	4	0.41	7	53.758	7	-90.451	5	102.529	7	-226.899	4
2027		4	max	-688.854	7	-6.892	7	4.419	4	-0.427	7	97.213	4	97.747	4	-20.803	7
2028			min	-1249.064	4	-13.104	4	0.41	7	-97.213	4	0.427	7	16.916	7	-120.209	4
2029		5	max	-687.294	7	-13.369	7	4.419	4	-140.974	7	402.83	4	-239.649	7	490.095	2
2030			min	-1246.465	4	-23.899	4	0.41	7	-402.829	4	140.974	7	-398.515	2	294.722	7
2031	M204	1	max	-552.199	7	23.632	2	-0.525	4	-168.261	7	276.216	2	-190.654	7	479.086	4
2032			min	-952.355	4	14.196	7	-2.751	2	-276.216	2	168.262	7	-389.562	4	234.467	7
2033		2	max	-550.639	7	12.837	2	-0.525	4	26.513	4	-0.714	7	87.211	2	-65.501	7
2034			min	-949.756	4	7.719	7	-2.751	2	0.714	7	-26.513	4	53.261	7	-107.252	2
2035		3	max	-549.08	7	2.042	2	-0.525	4	139.922	5	-83.327	7	226.146	4	-155.232	7
2036			min	-947.157	4	1.242	7	-2.751	2	83.327	7	-139.922	5	126.225	7	-278.116	4
2037		4	max	-547.52	7	-5.235	7	-0.525	4	131.431	2	-77.681	4	106.621	4	-34.725	7
2038			min	-944.558	4	-9.401	4	-2.751	2	77.68	4	-131.431	2	28.236	7	-131.123	4
2039		5	max	-545.961	7	-11.712	7	-0.525	4	-10.534	7	112.642	4	-240.703	7	487.427	2
2040			min	-941.959	4	-20.196	4	-2.751	2	-112.642	4	10.534	7	-396.345	2	296.018	7
2041	M205	1	max	-612.164	7	18.114	2	3.654	4	89.196	4	-0.045	7	-143.584	7	448.109	4
2042			min	-1017.985	2	10.877	7	0.719	7	0.045	7	-89.196	4	-364.374	4	176.58	7
2043		2	max	-613.723	7	7.319	2	3.654	4	205.898	4	-92.312	7	125.549	2	-73.169	4
2044			min	-1020.584	2	4.4	7	0.719	7	92.312	7	-205.899	4	59.496	4	-154.401	2
2045		3	max	-615.282	7	-2.077	7	3.654	4	178.664	4	-98.217	7	210.635	2	-155.728	7
2046			min	-1023.183	2	-3.786	4	0.719	7	98.217	7	-178.664	4	126.628	7	-259.04	2
2047		4	max	-616.842	7	-8.554	7	3.654	4	27.542	2	-7.492	4	52.48	4	-6.526	7
2048			min	-1025.782	2	-14.582	4	0.719	7	7.492	4	-27.542	2	5.307	7	-64.54	4
2049		5	max	-618.401	7	-15.031	7	3.654	4	-149.06	7	307.618	4	-286.967	7	582.868	2

Envelope Member Section Stresses (Continued)

	Member	Sec		Axial[psi]	LC	y Shear[psi]	LC	z Shear[psi]	LC	y-Top[psi]	LC	y-Bot[psi]	LC	z-Top[psi]	LC	z-Bot[psi]	LC
2050			min	-1028.381	2	-25.377	4	0.719	7	-307.618	4	149.06	7	-473.951	2	352.913	7
2051	M206	1	max	-763.885	7	18.679	2	6.181	4	65.432	4	73.261	2	-225.037	7	654.415	4
2052			min	-1268.892	2	11.216	7	1.498	7	-73.261	2	-65.432	4	-532.129	4	276.752	7
2053		2	max	-765.444	7	7.884	2	6.181	4	148.424	4	-41.936	7	41.47	2	51.126	4
2054			min	-1271.491	2	4.739	7	1.498	7	41.936	7	-148.424	4	-41.572	4	-51.001	2
2055		3	max	-767.003	7	-1.738	7	6.181	4	87.478	4	-41.968	7	174.23	5	-128.137	7
2056			min	-1274.09	2	-3.787	4	1.498	7	41.968	7	-87.479	4	104.193	7	-214.268	5
2057		4	max	-768.563	7	-8.215	7	6.181	4	-44.361	7	117.405	4	84.783	4	-15.225	7
2058			min	-1276.689	2	-14.582	4	1.498	7	-117.405	4	44.361	7	12.38	7	-104.266	4
2059		5	max	-770.122	7	-14.692	7	6.181	4	-217.053	7	466.226	4	-250.384	7	511.226	2
2060			min	-1279.288	2	-25.377	4	1.498	7	-466.225	4	217.053	7	-415.697	2	307.923	7
2061	M207	1	max	-888.31	7	17.864	2	8.829	4	109.982	4	82.355	5	-246.087	7	756.784	4
2062			min	-1476.305	2	10.729	7	2.302	7	-82.354	5	-109.982	4	-615.369	4	302.639	7
2063		2	max	-889.869	7	7.069	2	8.829	4	141.595	4	-22.468	7	25.09	5	106.65	4
2064			min	-1478.904	2	4.252	7	2.302	7	22.468	7	-141.596	4	-86.721	4	-30.856	5
2065		3	max	-891.428	7	-2.225	7	8.829	4	29.272	4	-5.282	7	167.988	5	-122.836	7
2066			min	-1481.503	2	-4.992	4	2.302	7	5.282	7	-29.272	4	99.883	7	-206.593	5
2067		4	max	-892.988	7	-8.702	7	8.829	4	-98.265	7	226.99	4	115.816	4	-20.218	7
2068			min	-1484.102	2	-15.787	4	2.302	7	-226.989	4	98.265	7	16.44	7	-142.432	4
2069		5	max	-894.547	7	-15.179	7	8.829	4	-288.175	7	627.189	4	-210.294	4	493.119	5
2070			min	-1486.701	2	-26.582	4	2.302	7	-627.187	4	288.176	7	-400.974	5	258.62	4
2071	M208	1	max	-1001.177	7	16.595	5	11.898	4	162.615	4	109.827	5	-253.731	7	817.923	4
2072			min	-1668.371	2	9.895	7	3.113	7	-109.827	5	-162.615	4	-665.083	4	312.04	7
2073		2	max	-1002.736	7	5.8	5	11.898	4	120.874	4	23.06	5	21.038	5	147.123	4
2074			min	-1670.97	2	3.37	4	3.113	7	-23.06	5	-120.874	4	-119.631	4	-25.873	5
2075		3	max	-1004.295	7	-3.059	7	11.898	4	-45.516	7	80.23	5	155.473	5	-111.931	7
2076			min	-1673.568	2	-7.425	4	3.113	7	-80.23	5	45.516	7	91.015	7	-191.201	5
2077		4	max	-1005.855	7	-9.536	7	11.898	4	-170.997	7	394.421	4	116.516	4	-6.135	5
2078			min	-1676.167	2	-18.22	4	3.113	7	-394.42	4	170.997	7	4.988	5	-143.292	4
2079		5	max	-1007.414	7	-16.013	7	11.898	4	-382.841	7	867.975	4	-192.79	4	529.327	5
2080			min	-1678.766	2	-29.015	4	3.113	7	-867.973	4	382.842	7	-430.416	5	237.094	4
2081	M209	1	max	-1112.025	7	17.349	2	13.695	4	170.947	4	172.37	5	-281.58	7	876.176	4
2082			min	-1866.89	5	10.412	7	3.294	7	-172.37	5	-170.947	4	-712.451	4	346.288	7
2083		2	max	-1113.584	7	6.554	2	13.695	4	101.786	4	73.465	5	20.461	5	155.455	4
2084			min	-1869.489	5	3.111	4	3.294	7	-73.464	5	-101.787	4	-126.406	4	-25.163	5
2085		3	max	-1115.144	7	-2.542	7	13.695	4	-61.826	7	118.497	5	174.719	4	-123.006	7
2086			min	-1872.088	5	-7.684	4	3.294	7	-118.496	5	61.826	7	100.021	7	-214.87	4
2087		4	max	-1116.703	7	-9.019	7	13.695	4	-182.817	7	468.347	4	190.925	4	-42.298	7
2088			min	-1874.687	5	-18.479	4	3.294	7	-468.346	4	182.817	7	34.394	7	-234.801	4
2089		5	max	-1118.262	7	-15.496	7	13.695	4	-390.17	7	969.32	4	-77.788	4	473.083	5
2090			min	-1877.286	5	-29.274	4	3.294	7	-969.319	4	390.171	7	-384.682	5	95.664	4
2091	M210	1	max	-1223.039	7	16.818	5	13.546	4	119.549	4	291.071	5	-257.056	7	667.683	4
2092			min	-2094.047	5	8.793	7	4.052	5	-291.07	5	-119.549	4	-542.917	4	316.128	7
2093		2	max	-1224.599	7	6.023	5	13.546	4	-0.507	4	192.815	5	32.464	5	80.548	4
2094			min	-2096.646	5	-0.855	4	4.052	5	-192.815	5	0.507	4	-65.496	4	-39.924	5
2095		3	max	-1226.158	7	-4.161	7	13.546	4	-146.824	7	264.5	4	155.91	5	-99.097	7
2096			min	-2099.245	5	-11.65	4	4.052	5	-264.499	4	146.825	7	80.58	7	-191.739	5
2097		4	max	-1227.717	7	-10.638	7	13.546	4	-299.896	7	672.431	4	34.588	4	9.566	2
2098			min	-2101.844	5	-22.445	4	4.052	5	-672.429	4	299.897	7	-7.779	2	-42.537	4
2099		5	max	-1229.277	7	-17.115	7	13.546	4	-539.331	7	1224.299	4	-265.592	7	555.818	5
2100			min	-2104.443	5	-33.24	4	4.052	5	-1224.297	4	539.332	7	-451.956	5	326.626	7
2101	M211	1	max	1390.213	4	13.978	7	67.435	4	1844.236	4	661.468	7	-72.927	7	373.613	6
2102			min	664.613	7	-60.239	4	-10.874	7	-661.467	7	-1844.239	4	-324.676	6	83.919	7
2103		2	max	1387.614	4	10.385	7	67.435	4	1084.668	4	597.797	2	-57.599	7	315.256	4
2104			min	663.053	7	-66.227	4	-10.874	7	-597.795	2	-1084.67	4	-273.963	4	66.281	7

Envelope Member Section Stresses (Continued)

	Member	Sec		Axial[psi]	LC	y Shear[psi]	LC	z Shear[psi]	LC	y-Top[psi]	LC	y-Bot[psi]	LC	z-Top[psi]	LC	z-Bot[psi]	LC
2105		3	max	1385.015	4	6.792	7	67.435	4	290.292	4	580.399	2	-84.406	7	339.366	4
2106			min	661.494	7	-72.215	4	-10.874	7	-580.398	2	-290.293	4	-294.914	4	97.128	7
2107		4	max	1382.416	4	3.199	7	67.435	4	-322.061	7	634.411	5	-153.346	7	444.283	4
2108			min	659.935	7	-78.203	4	-10.874	7	-634.41	5	322.061	7	-386.089	4	176.459	7
2109		5	max	1379.817	4	-0.394	7	67.435	4	-250.695	7	1402.885	4	-242.303	5	630.007	4
2110			min	658.375	7	-84.191	4	-10.874	7	-1402.883	4	250.696	7	-547.486	4	278.824	5
2111	M212	1	max	1039.206	5	15.828	2	66.19	4	404.204	4	217.399	2	-202.58	4	809.809	5
2112			min	607.019	7	-52.775	4	-2.657	7	-217.398	2	-404.204	4	-703.737	5	233.114	4
2113		2	max	1041.805	5	9.84	2	66.19	4	-138.746	7	304.737	4	-80.375	4	474.552	5
2114			min	608.579	7	-58.763	4	-2.657	7	-304.736	4	138.746	7	-412.394	5	92.489	4
2115		3	max	1044.404	5	3.852	2	66.19	4	-93.437	7	1048.486	4	-28.393	4	220.103	5
2116			min	610.138	7	-64.751	4	-2.657	7	-1048.484	4	93.437	7	-191.273	5	32.672	4
2117		4	max	1047.003	5	-0.252	7	66.19	4	-69.012	7	1827.043	4	-35.158	6	140.473	7
2118			min	611.698	7	-70.739	4	-2.657	7	-1827.039	4	69.012	7	-122.073	7	40.457	6
2119		5	max	1049.602	5	-3.844	7	66.19	4	-65.472	7	2640.408	4	40.299	5	203.966	7
2120			min	613.257	7	-76.727	4	-2.657	7	-2640.403	4	65.472	7	-177.249	7	-46.373	5
2121	M213	1	max	114.094	2	13.465	2	30.669	4	1286.003	4	100.422	7	-180.205	5	1227.484	4
2122			min	-258.204	4	-0.937	4	-0.167	7	-100.422	7	-1286.005	4	-998.112	4	221.617	5
2123		2	max	114.094	2	6.426	7	30.669	4	963.02	4	18.34	7	9.041	5	665.476	4
2124			min	-258.204	4	-9.264	4	-0.167	7	-18.34	7	-963.022	4	-541.123	4	-11.118	5
2125		3	max	114.094	2	1.429	7	30.669	4	564.846	4	-18.628	7	49.449	5	286.51	4
2126			min	-258.204	4	-17.592	4	-0.167	7	18.628	7	-564.847	4	-232.972	4	-60.813	5
2127		4	max	114.094	2	-3.567	7	30.669	4	91.482	4	89.99	5	-1.075	7	90.584	4
2128			min	-258.204	4	-25.919	4	-0.167	7	-89.99	5	-91.482	4	-73.657	4	1.322	7
2129		5	max	114.094	2	-8.563	7	30.669	4	-42.779	7	457.073	4	-63.18	4	388.922	5
2130			min	-258.204	4	-34.246	4	-0.167	7	-457.072	4	42.779	7	-316.247	5	77.7	4
2131	M214	1	max	143.77	2	31.123	4	5.495	5	-40.483	5	514.372	4	-397.622	7	906.082	4
2132			min	-616.46	4	14.76	7	-0.837	4	-514.371	4	40.483	5	-736.769	4	488.998	7
2133		2	max	143.77	2	18.827	4	5.495	5	105.361	5	170.201	4	-35.138	7	122.592	4
2134			min	-616.46	4	7.382	7	-0.837	4	-170.201	4	-105.361	5	-99.684	4	43.213	7
2135		3	max	143.77	2	6.53	4	5.495	5	90.794	2	-10.012	4	219.714	2	-163.093	7
2136			min	-616.46	4	-2.012	5	-0.837	4	10.012	4	-90.794	2	132.617	7	-270.205	2
2137		4	max	143.77	2	-5.766	4	5.495	5	26.269	4	94.822	5	200.841	4	-129.921	7
2138			min	-616.46	4	-14.308	5	-0.837	4	-94.822	5	-26.269	4	105.643	7	-246.996	4
2139		5	max	143.77	2	-14.752	7	5.495	5	-121.433	4	440.85	5	-116.059	7	302.995	5
2140			min	-616.46	4	-26.605	5	-0.837	4	-440.849	5	121.433	4	-246.376	5	142.73	7
2141	M215	1	max	81.7	2	34.702	4	0.705	5	-196.058	7	595.424	4	-335.176	7	951.166	4
2142			min	-569.005	4	16.758	7	-3.449	4	-595.423	4	196.059	7	-773.428	4	412.202	7
2143		2	max	81.7	2	22.405	4	0.705	5	-4.855	5	168.717	4	33.444	5	136.292	4
2144			min	-569.005	4	9.38	7	-3.449	4	-168.717	4	4.855	5	-110.824	4	-41.13	5
2145		3	max	81.7	2	10.109	4	0.705	5	94.033	4	-55.862	7	261.946	5	-192.366	7
2146			min	-569.005	4	1.805	5	-3.449	4	55.862	7	-94.033	4	156.42	7	-322.142	5
2147		4	max	81.7	2	-2.188	4	0.705	5	192.825	4	-24.485	5	240.74	4	-135.432	7
2148			min	-569.005	4	-10.492	5	-3.449	4	24.485	5	-192.826	4	110.125	7	-296.064	4
2149		5	max	81.7	2	-12.754	7	0.705	5	127.66	4	206.781	5	-70.3	4	313.226	5
2150			min	-569.005	4	-22.788	5	-3.449	4	-206.781	5	-127.66	4	-254.695	5	86.455	4
2151	M216	1	max	45.007	2	32.988	4	1.667	5	-157.858	7	494.526	4	-361.561	7	967.971	4
2152			min	-541.908	4	16.277	7	-1.425	4	-494.525	4	157.858	7	-787.093	4	444.649	7
2153		2	max	45.007	2	20.691	4	1.667	5	7.838	5	117.65	4	-5.575	5	143.061	4
2154			min	-541.908	4	8.899	7	-1.425	4	-117.65	4	-7.838	5	-116.328	4	6.856	5
2155		3	max	45.007	2	8.395	4	1.667	5	95.267	4	-57.991	7	251.643	5	-185.354	7
2156			min	-541.908	4	1.521	7	-1.425	4	57.991	7	-95.267	4	150.718	7	-309.471	5
2157		4	max	45.007	2	-3.902	4	1.667	5	144.228	4	-14.88	5	251.558	4	-141.137	7
2158			min	-541.908	4	-10.366	5	-1.425	4	14.879	5	-144.228	4	114.764	7	-309.367	4
2159		5	max	45.007	2	-13.234	7	1.667	5	29.231	4	227.536	5	-51.322	4	255.267	5

Envelope Member Section Stresses (Continued)

	Member	Sec		Axial[psi]	LC	y Shear[psi]	LC	z Shear[psi]	LC	y-Top[psi]	LC	y-Bot[psi]	LC	z-Top[psi]	LC	z-Bot[psi]	LC
2160			min	-541.908	4	-22.662	5	-1.425	4	-227.536	5	-29.231	4	-207.567	5	63.116	4
2161	M217	1	max	-1.544	2	32.493	4	0.248	5	-178.11	7	486.962	4	-332.136	7	883.093	4
2162			min	-481.984	4	16.467	7	-2.097	4	-486.961	4	178.111	7	-718.076	4	408.463	7
2163		2	max	-1.544	2	20.197	4	0.248	5	-8.913	7	107.72	4	15.029	5	96.047	4
2164			min	-481.984	4	9.089	7	-2.097	4	-107.72	4	8.913	7	-78.099	4	-18.483	5
2165		3	max	-1.544	2	7.9	4	0.248	5	107.564	4	-61.91	7	253.913	2	-187.277	7
2166			min	-481.984	4	1.711	7	-2.097	4	61.91	7	-107.564	4	152.282	7	-312.264	2
2167		4	max	-1.544	2	-4.396	4	0.248	5	158.891	4	-34.358	7	228.21	4	-125.929	7
2168			min	-481.984	4	-9.642	5	-2.097	4	34.358	7	-158.891	4	102.397	7	-280.654	4
2169		5	max	-1.544	2	-13.045	7	0.248	5	46.26	4	163.251	5	-105.458	4	297.628	5
2170			min	-481.984	4	-21.939	5	-2.097	4	-163.251	5	-46.26	4	-242.012	5	129.693	4
2171	M218	1	max	-22.701	7	30.717	4	-0.081	7	-167.404	7	429.294	4	-303.361	7	765.208	4
2172			min	-380.923	4	16.09	7	-1.966	4	-429.293	4	167.404	7	-622.219	4	373.075	7
2173		2	max	-22.701	7	18.421	4	-0.081	7	-0.967	7	75.485	4	35.506	2	31.525	4
2174			min	-380.923	4	8.712	7	-1.966	4	-75.485	4	0.967	7	-25.634	4	-43.666	2
2175		3	max	-22.701	7	6.124	4	-0.081	7	114.366	4	-67.096	7	253.427	2	-187.253	7
2176			min	-380.923	4	1.335	7	-1.966	4	67.096	7	-114.366	4	152.262	7	-311.666	2
2177		4	max	-22.701	7	-6.043	7	-0.081	7	140.26	4	-36.785	7	193.892	4	-108.199	7
2178			min	-380.923	4	-10.044	2	-1.966	4	36.785	7	-140.26	4	87.98	7	-238.45	4
2179		5	max	-22.701	7	-13.421	7	-0.081	7	2.196	4	153.46	5	-171.031	7	349.726	2
2180			min	-380.923	4	-22.341	2	-1.966	4	-153.459	5	-2.196	4	-284.375	2	210.334	7
2181	M219	1	max	-29.41	7	30.278	4	-0.829	7	-168.478	7	379	4	-281.484	7	668.888	4
2182			min	-230.639	4	16.718	7	-2.428	4	-378.999	4	168.478	7	-543.898	4	346.17	7
2183		2	max	-29.41	7	17.982	4	-0.829	7	24.205	2	24.885	4	65.496	2	-35.526	4
2184			min	-230.639	4	9.34	7	-2.428	4	-24.885	4	-24.205	2	28.888	4	-80.547	2
2185		3	max	-29.41	7	5.685	4	-0.829	7	169.342	2	-102.71	7	279.004	2	-206.302	7
2186			min	-230.639	4	1.962	7	-2.428	4	102.71	7	-169.343	2	167.752	7	-343.12	2
2187		4	max	-29.41	7	-5.416	7	-0.829	7	191.473	4	-90.742	7	200.814	4	-123.32	7
2188			min	-230.639	4	-8.958	2	-2.428	4	90.742	7	-191.473	4	100.276	7	-246.963	4
2189		5	max	-29.41	7	-12.794	7	-0.829	7	53.716	4	32.254	2	-161.929	7	329.126	2
2190			min	-230.639	4	-21.254	2	-2.428	4	-32.254	2	-53.716	4	-267.624	2	199.141	7
2191	M220	1	max	-107.598	5	34.7	4	-12.214	5	58.936	5	2054.022	4	422.39	2	-48.608	4
2192			min	-454.352	4	-6.806	5	-53.08	4	-2054.018	4	-58.937	5	39.525	4	-519.457	2
2193		2	max	-107.598	5	34.7	4	-3.887	5	70.176	5	1299.004	4	112.7	2	263.877	4
2194			min	-454.352	4	-6.806	5	-44.753	4	-1299.001	4	-70.176	5	-214.568	4	-138.599	2
2195		3	max	-107.598	5	34.7	4	4.44	5	63.895	7	619.176	4	-36.584	7	393.321	4
2196			min	-454.352	4	-6.806	5	-36.425	4	-619.175	4	-63.895	7	-319.824	4	44.992	7
2197		4	max	-107.598	5	34.7	4	12.767	5	53.416	7	132.918	5	-8.446	5	339.726	4
2198			min	-454.352	4	-6.806	5	-28.098	4	-132.917	5	-53.416	7	-276.244	4	10.387	5
2199		5	max	-107.598	5	34.7	4	21.094	5	514.905	4	347.251	5	172.518	5	103.09	4
2200			min	-454.352	4	-6.806	5	-19.771	4	-347.25	5	-514.906	4	-83.826	4	-212.164	5
2201	M221	1	max	-106.742	7	-1.17	7	-15.132	7	-116.569	5	326.325	4	758.41	4	-412.428	7
2202			min	-820.888	4	-3.29	5	-28.1	4	-326.324	4	116.569	5	335.36	7	-932.696	4
2203		2	max	-106.742	7	-1.17	7	-7.754	7	58.973	5	70.897	4	105.27	4	39.713	5
2204			min	-820.888	4	-3.29	5	-15.803	4	-70.897	4	-58.973	5	-32.292	5	-129.461	4
2205		3	max	-106.742	7	-1.17	7	1.99	5	70.557	5	-20.572	4	-135.718	7	281.482	5
2206			min	-820.888	4	-3.29	5	-3.507	4	20.572	4	-70.557	5	-228.883	5	166.907	7
2207		4	max	-106.742	7	-1.17	7	14.286	5	-24.121	7	81.817	5	-79.165	7	279.62	4
2208			min	-820.888	4	-3.29	5	7.002	7	-81.817	5	24.122	7	-227.37	4	97.358	7
2209		5	max	-106.742	7	-1.17	7	26.583	5	-182.277	7	398.15	5	351.574	5	-114.533	4
2210			min	-820.888	4	-3.29	5	14.38	7	-398.149	5	182.278	7	93.131	4	-432.368	5
2211	M222	1	max	-55.676	7	-0.431	4	-15.267	7	-84.49	7	443.242	4	852.482	4	-449.314	7
2212			min	-570.159	4	-3.256	5	-32.431	4	-443.241	4	84.49	7	365.354	7	-1048.387	4
2213		2	max	-55.676	7	-0.431	4	-7.889	7	100.472	5	98.532	4	147.416	4	2.152	5
2214			min	-570.159	4	-3.256	5	-20.135	4	-98.532	4	-100.472	5	-1.75	5	-181.293	4

Envelope Member Section Stresses (Continued)

	Member	Sec		Axial[psi]	LC	y Shear[psi]	LC	z Shear[psi]	LC	y-Top[psi]	LC	y-Bot[psi]	LC	z-Top[psi]	LC	z-Bot[psi]	LC
2215		3	max	-55.676	7	-0.431	4	0.637	5	133.088	2	-82.219	7	-137.552	7	286.902	6
2216			min	-570.159	4	-3.256	5	-7.838	4	82.218	7	-133.088	2	-233.291	6	169.162	7
2217		4	max	-55.676	7	-0.431	4	12.934	5	99.013	4	3.333	5	-96.912	7	355.506	4
2218			min	-570.159	4	-3.256	5	4.458	4	-3.333	5	-99.013	4	-289.075	4	119.183	7
2219		5	max	-55.676	7	-0.431	4	25.23	5	-48.152	4	301.173	5	277.74	5	25.212	4
2220			min	-570.159	4	-3.256	5	14.244	7	-301.172	5	48.152	4	-20.501	4	-341.566	5
2221	M223	1	max	-19.797	7	1.235	4	-15.791	7	-167.793	7	553.559	4	798.896	4	-400.19	7
2222			min	-370.214	4	-0.824	5	-32.96	4	-553.558	4	167.793	7	325.409	7	-982.486	4
2223		2	max	-19.797	7	1.235	4	-8.413	7	-12.125	7	179.584	4	123.843	4	25.816	5
2224			min	-370.214	4	-0.824	5	-20.664	4	-179.583	4	12.125	7	-20.992	5	-152.302	4
2225		3	max	-19.797	7	1.235	4	-1.035	7	72.204	2	-30.434	4	-141.195	7	291.328	5
2226			min	-370.214	4	-0.824	5	-8.367	4	30.434	4	-72.204	2	-236.89	5	173.642	7
2227		4	max	-19.797	7	1.235	4	11.089	5	76.493	4	6.728	5	-82.405	7	310.677	4
2228			min	-370.214	4	-0.824	5	3.929	4	-6.728	5	-76.493	4	-252.623	4	101.342	7
2229		5	max	-19.797	7	1.235	4	23.385	5	-41.406	4	247.547	5	304.956	5	-56.528	4
2230			min	-370.214	4	-0.824	5	13.721	7	-247.547	5	41.406	4	45.965	4	-375.036	5
2231	M224	1	max	12.204	2	-0.299	4	-15.008	7	-103.639	7	338.618	4	707.854	4	-382.549	7
2232			min	-197.66	4	-1.593	5	-29.783	4	-338.617	4	103.639	7	311.065	7	-870.523	4
2233		2	max	12.204	2	-0.299	4	-7.63	7	57.645	2	27.461	4	76.142	4	27.136	5
2234			min	-197.66	4	-1.593	5	-17.487	4	-27.461	4	-57.645	2	-22.065	5	-93.64	4
2235		3	max	12.204	2	-0.299	4	-0.252	7	123.136	2	-75.184	7	-140.457	7	287.738	2
2236			min	-197.66	4	-1.593	5	-5.19	4	75.184	7	-123.136	2	-233.97	2	172.735	7
2237		4	max	12.204	2	-0.299	4	12.011	5	102.977	4	-17.034	7	-74.126	7	262.737	4
2238			min	-197.66	4	-1.593	5	7.106	4	17.033	7	-102.977	4	-213.641	4	91.16	7
2239		5	max	12.204	2	-0.299	4	24.307	5	-77.741	4	241.07	5	316.024	5	-157.769	4
2240			min	-197.66	4	-1.593	5	14.504	7	-241.07	5	77.741	4	128.288	4	-388.648	5
2241	M225	1	max	45.75	2	0.177	4	-14.695	7	-107.435	7	298.611	4	602.82	4	-336.209	7
2242			min	-66.737	4	-0.798	2	-28.187	4	-298.61	4	107.436	7	273.384	7	-741.351	4
2243		2	max	45.75	2	0.177	4	-7.317	7	52.916	2	2.384	4	25.806	4	59.802	2
2244			min	-66.737	4	-0.798	2	-15.891	4	-2.384	4	-52.916	2	-48.628	2	-31.736	4
2245		3	max	45.75	2	0.177	4	0.063	2	129.884	4	-74.817	7	-138.337	7	283.228	2
2246			min	-66.737	4	-0.798	2	-3.594	4	74.817	7	-129.884	4	-230.304	2	170.128	7
2247		4	max	45.75	2	0.177	4	12.359	2	98.194	4	-18.381	7	-52.105	7	190.106	4
2248			min	-66.737	4	-0.798	2	7.439	7	18.381	7	-98.194	4	-154.582	4	64.079	7
2249		5	max	45.75	2	0.177	4	24.656	2	-97.454	4	227.46	2	379.986	2	-281.447	7
2250			min	-66.737	4	-0.798	2	14.817	7	-227.46	2	97.454	4	228.855	7	-467.308	2
2251	M226	1	max	53.978	2	0.749	4	-15.851	7	-110.907	7	249.643	4	536.55	4	-327.723	7
2252			min	9.765	4	0.198	7	-28.499	4	-249.643	4	110.907	7	266.483	7	-659.852	4
2253		2	max	53.978	2	0.749	4	-8.473	7	87.483	2	-53.904	7	-33.578	4	98.077	2
2254			min	9.765	4	0.198	7	-16.202	4	53.904	7	-87.483	2	-79.75	2	41.295	4
2255		3	max	53.978	2	0.749	4	-1.096	7	202.403	4	-120.34	7	-170.35	7	348.313	2
2256			min	9.765	4	0.198	7	-3.906	4	120.34	7	-202.403	4	-283.227	2	209.498	7
2257		4	max	53.978	2	0.749	4	10.412	2	182.489	4	-88.401	7	-96.675	7	246.201	4
2258			min	9.765	4	0.198	7	6.282	7	88.401	7	-182.489	4	-200.195	4	118.891	7
2259		5	max	53.978	2	0.749	4	22.708	2	-1.383	4	70.228	5	283.461	2	-211.193	7
2260			min	9.765	4	0.198	7	13.66	7	-70.228	5	1.383	4	171.729	7	-348.602	2
2261	M227	1	max	368.866	4	28.103	2	8.839	5	72.211	5	542.616	7	241.513	4	1188.923	5
2262			min	77.928	5	8.034	4	-28.41	4	-542.615	7	-72.211	5	-966.757	5	-297.014	4
2263		2	max	368.866	4	28.103	2	14.727	5	113.496	5	238.05	7	21.199	4	722.13	5
2264			min	77.928	5	8.034	4	-22.522	4	-238.049	7	-113.496	5	-587.19	5	-26.07	4
2265		3	max	368.866	4	28.103	2	20.615	5	117.185	5	-43.959	7	-67.568	7	163.816	5
2266			min	77.928	5	8.034	4	-16.634	4	43.959	7	-117.185	5	-133.205	5	83.095	7
2267		4	max	368.866	4	28.103	2	26.504	5	303.41	7	-83.279	5	395.199	5	241.256	4
2268			min	77.928	5	8.034	4	-12.141	7	83.279	5	-303.41	7	-196.174	4	-486.018	5
2269		5	max	368.866	4	28.103	2	32.392	5	540.303	7	-11.777	5	998.022	5	237.639	4

Envelope Member Section Stresses (Continued)

	Member	Sec		Axial[psi]	LC	y Shear[psi]	LC	z Shear[psi]	LC	y-Top[psi]	LC	y-Bot[psi]	LC	z-Top[psi]	LC	z-Bot[psi]	LC
2270			min	77.928	5	8.034	4	-8.608	7	11.777	5	-540.304	7	-193.233	4	-1227.372	5
2271	M228	1	max	346.76	4	64.665	4	-28.561	7	-600.237	7	2170.672	4	1124.055	4	179.094	5
2272			min	45.117	7	22.37	7	-114.643	4	-2170.668	4	600.238	7	-145.628	5	-1382.369	4
2273		2	max	346.76	4	64.665	4	-24.796	5	-286.328	7	1044.614	4	529.617	4	146.69	5
2274			min	45.117	7	22.37	7	-108.754	4	-1044.612	4	286.329	7	-119.279	5	-651.326	4
2275		3	max	346.76	4	64.665	4	-18.908	5	43.849	4	-5.022	7	9.597	4	22.767	5
2276			min	45.117	7	22.37	7	-102.866	4	5.022	7	-43.849	4	-18.512	5	-11.803	4
2277		4	max	346.76	4	64.665	4	-13.019	5	1094.714	4	-273.817	7	156.673	5	536.2	4
2278			min	45.117	7	22.37	7	-96.978	4	273.816	7	-1094.716	4	-436.004	4	-192.677	5
2279		5	max	346.76	4	64.665	4	-7.131	5	2107.984	4	-520.053	7	406.276	5	992.683	4
2280			min	45.117	7	22.37	7	-91.09	4	520.052	7	-2107.988	4	-807.187	4	-499.641	5
2281	M229	1	max	229.369	4	59.459	4	-23.762	7	-535.583	7	2032.124	4	935.092	4	275.042	5
2282			min	20.63	7	20.568	7	-105.412	4	-2032.12	4	535.584	7	-223.647	5	-1149.981	4
2283		2	max	229.369	4	59.459	4	-20.229	7	-263.819	7	998.242	4	391.533	4	240.188	5
2284			min	20.63	7	20.568	7	-99.523	4	-998.24	4	263.819	7	-195.306	5	-481.509	4
2285		3	max	229.369	4	59.459	4	-16.696	7	-1.955	4	25.805	5	-53.185	7	113.814	5
2286			min	20.63	7	20.568	7	-93.635	4	-25.805	5	1.955	4	-92.547	5	65.408	7
2287		4	max	229.369	4	59.459	4	-13.074	5	956.734	4	-212.038	7	84.631	5	580.876	4
2288			min	20.63	7	20.568	7	-87.747	4	212.038	7	-956.736	4	-472.331	4	-104.08	5
2289		5	max	229.369	4	59.459	4	-7.185	5	1877.828	4	-416.131	7	336.227	5	974.788	4
2290			min	20.63	7	20.568	7	-81.859	4	416.13	7	-1877.831	4	-792.636	4	-413.494	5
2291	M230	1	max	142.509	4	44.564	4	-20.902	7	-396.187	7	1708.141	4	1041.928	4	-102.739	7
2292			min	5.438	7	12.958	7	-92.745	4	-1708.138	4	396.188	7	83.541	7	-1281.369	4
2293		2	max	142.509	4	44.564	4	-17.37	7	-191.27	7	850.237	4	470.194	4	13.991	5
2294			min	5.438	7	12.958	7	-86.857	4	-850.235	4	191.27	7	-11.377	5	-578.247	4
2295		3	max	142.509	4	44.564	4	-13.837	7	-8.91	7	29.928	4	-27.122	4	58.539	5
2296			min	5.438	7	12.958	7	-80.969	4	-29.928	4	8.91	7	-47.6	5	33.354	4
2297		4	max	142.509	4	44.564	4	-10.304	7	752.783	4	-150.893	7	-9.405	5	553.436	4
2298			min	5.438	7	12.958	7	-75.081	4	150.892	7	-752.785	4	-450.019	4	11.566	5
2299		5	max	142.509	4	44.564	4	-6.771	7	1497.9	4	-288.138	7	103.208	5	981.997	4
2300			min	5.438	7	12.958	7	-69.192	4	288.138	7	-1497.903	4	-798.498	4	-126.926	5
2301	M231	1	max	68.519	4	31.04	4	-15.057	7	-239.376	7	1230.16	4	815.586	4	-93.616	7
2302			min	-8.947	2	7.287	7	-70.657	4	-1230.158	4	239.376	7	76.123	7	-1003.011	4
2303		2	max	68.519	4	31.04	4	-11.524	7	-107.992	7	599.636	4	352.099	4	-0.304	7
2304			min	-8.947	2	7.287	7	-64.769	4	-599.635	4	107.992	7	0.247	7	-433.013	4
2305		3	max	68.519	4	31.04	4	-7.991	7	2.464	5	6.707	4	-30.977	7	63.847	5
2306			min	-8.947	2	7.287	7	-58.88	4	-6.707	4	-2.464	5	-51.917	5	38.096	7
2307		4	max	68.519	4	31.04	4	-4.458	7	548.625	4	-87.105	7	-17.551	7	432.423	4
2308			min	-8.947	2	7.287	7	-52.992	4	87.104	7	-548.626	4	-351.619	4	21.584	7
2309		5	max	68.519	4	31.04	4	-0.925	7	1066.361	4	-150.817	7	66.692	2	727.86	4
2310			min	-8.947	2	7.287	7	-47.104	4	150.817	7	-1066.363	4	-591.85	4	-82.018	2
2311	M232	1	max	18.37	4	14.578	4	-5.2	7	-11.406	7	647.882	4	516.222	4	-22.165	7
2312			min	-19.26	2	-0.124	7	-42.284	4	-647.881	4	11.406	7	18.024	7	-634.853	4
2313		2	max	18.37	4	14.578	4	-1.667	7	9.724	7	303.624	4	203.264	4	46.934	2
2314			min	-19.26	2	-0.124	7	-36.396	4	-303.623	4	-9.724	7	-38.164	2	-249.975	4
2315		3	max	18.37	4	14.578	4	2.253	2	14.324	5	-3.038	4	-27.256	7	55.79	2
2316			min	-19.26	2	-0.124	7	-30.508	4	3.038	4	-14.324	5	-45.365	2	33.52	7
2317		4	max	18.37	4	14.578	4	8.141	2	272.105	4	18.255	2	21.852	2	245.222	4
2318			min	-19.26	2	-0.124	7	-24.619	4	-18.255	2	-272.105	4	-199.399	4	-26.873	2
2319		5	max	18.37	4	14.578	4	14.029	2	503.576	4	88.258	2	163.487	2	355.54	4
2320			min	-19.26	2	-0.124	7	-18.731	4	-88.258	2	-503.577	4	-289.102	4	-201.057	2
2321	M233	1	max	0.268	4	-2.433	4	11.235	2	348.44	2	-1.995	4	-40.784	4	387.184	2
2322			min	-10.049	2	-10.379	2	-7.25	4	1.995	4	-348.44	2	-314.834	2	50.157	4
2323		2	max	0.268	4	-2.433	4	17.123	2	191.637	2	-13.958	4	-125.955	4	328.125	2
2324			min	-10.049	2	-10.379	2	-1.362	4	13.958	4	-191.637	2	-266.811	2	154.9	4

Envelope Member Section Stresses (Continued)

	Member	Sec		Axial[psi]	LC	y Shear[psi]	LC	z Shear[psi]	LC	y-Top[psi]	LC	y-Bot[psi]	LC	z-Top[psi]	LC	z-Bot[psi]	LC
2325		3	max	0.268	4	-2.433	4	23.011	2	-1.736	7	11.675	4	-86.753	7	177.547	2
2326			min	-10.049	2	-10.379	2	4.526	4	-11.675	4	1.736	7	-144.37	2	106.689	7
2327		4	max	0.268	4	-2.433	4	28.9	2	-74.904	4	234.757	2	52.49	2	89.824	4
2328			min	-10.049	2	-10.379	2	10.414	4	-234.756	2	74.904	4	-73.039	4	-64.552	2
2329		5	max	0.268	4	-2.433	4	34.788	2	-175.727	4	504.346	2	323.768	2	-79.994	4
2330			min	-10.049	2	-10.379	2	16.302	4	-504.346	2	175.728	4	65.046	4	-398.171	2
2331	M234	1	max	292.348	4	77.728	4	-26.297	7	-457.637	5	2147.246	4	714.545	6	-285.977	7
2332			min	-75.195	2	9.103	5	-98.546	4	-2147.242	4	457.638	5	232.538	7	-878.751	6
2333		2	max	292.348	4	71.84	4	-26.297	7	-225.684	5	1040.556	4	405.362	6	-172.475	7
2334			min	-75.195	2	3.215	5	-98.546	4	-1040.555	4	225.684	5	140.246	7	-498.516	6
2335		3	max	292.348	4	65.952	4	-26.297	7	28.538	4	33.319	2	21.76	6	-4.061	7
2336			min	-75.195	2	-2.673	5	-98.546	4	-33.318	2	-28.538	4	3.302	7	-26.761	6
2337		4	max	292.348	4	60.064	4	-26.297	7	1060.034	4	-125.438	5	-178.293	7	536.515	6
2338			min	-75.195	2	-8.562	5	-98.546	4	125.438	5	-1060.036	4	-436.26	6	219.265	7
2339		5	max	292.348	4	54.175	4	-26.297	7	2053.936	4	-244.606	5	-404.539	7	1191.311	6
2340			min	-75.195	2	-14.45	5	-98.546	4	244.606	5	-2053.94	4	-968.699	6	497.504	7
2341	M235	1	max	329.678	4	117.627	4	-32.572	7	-773.626	7	2749.73	4	602.706	5	342.281	4
2342			min	-60.925	2	28.888	7	-98.045	4	-2749.725	4	773.627	7	-278.322	4	-741.211	5
2343		2	max	329.678	4	111.739	4	-32.572	7	-392.492	7	1391.486	4	379.193	5	83.677	4
2344			min	-60.925	2	23.246	5	-98.045	4	-1391.483	4	392.493	7	-68.041	4	-466.333	5
2345		3	max	329.678	4	105.851	4	-32.572	7	-33.916	7	70.837	4	81.261	5	-57.89	7
2346			min	-60.925	2	17.358	5	-98.045	4	-70.837	4	33.916	7	47.073	7	-99.935	5
2347		4	max	329.678	4	99.962	4	-32.572	7	1212.213	4	-302.105	7	129.264	4	357.985	5
2348			min	-60.925	2	11.47	5	-98.045	4	302.104	7	-1212.216	4	-291.09	5	-158.97	4
2349		5	max	329.678	4	94.074	4	-32.572	7	2457.669	4	-615.567	7	116.289	4	907.424	5
2350			min	-60.925	2	5.581	5	-98.045	4	615.566	7	-2457.674	4	-737.86	5	-143.013	4
2351	M236	1	max	315.16	4	111.017	4	-23.562	7	-566.61	7	2513.693	4	387.878	5	452.78	4
2352			min	-36.1	2	22.593	7	-87.99	4	-2513.688	4	566.611	7	-368.172	4	-477.015	5
2353		2	max	315.16	4	105.129	4	-23.562	7	-283.19	7	1261.856	4	274.693	5	140.626	4
2354			min	-36.1	2	19.061	7	-87.99	4	-1261.854	4	283.191	7	-114.348	4	-337.819	5
2355		3	max	315.16	4	99.241	4	-23.562	7	-22.328	7	47.615	4	87.09	5	-62.573	7
2356			min	-36.1	2	15.528	7	-87.99	4	-47.615	4	22.328	7	50.88	7	-107.103	5
2357		4	max	315.16	4	93.352	4	-23.562	7	1129.028	4	-215.978	7	170.044	4	215.133	5
2358			min	-36.1	2	10.323	5	-87.99	4	215.977	7	-1129.031	4	-174.932	5	-209.121	4
2359		5	max	315.16	4	87.464	4	-23.562	7	2268.077	4	-431.726	7	200.612	4	628.89	5
2360			min	-36.1	2	4.435	5	-87.99	4	431.726	7	-2268.081	4	-511.373	5	-246.714	4
2361	M237	1	max	294.295	4	97.283	4	-18.789	7	-475.191	7	2110.704	4	202.174	5	539.938	4
2362			min	-16.092	2	20.73	7	-70.944	4	-2110.7	4	475.192	7	-439.043	4	-248.634	5
2363		2	max	294.295	4	91.395	4	-18.789	7	-234.144	7	1055.391	4	186.685	5	176.315	4
2364			min	-16.092	2	17.197	7	-70.944	4	-1055.389	4	234.144	7	-143.368	4	-229.586	5
2365		3	max	294.295	4	85.506	4	-18.789	7	-15.654	7	37.674	4	96.778	5	-70.368	7
2366			min	-16.092	2	13.664	7	-70.944	4	-37.674	4	15.654	7	57.219	7	-119.018	5
2367		4	max	294.295	4	79.618	4	-18.789	7	942.446	4	-180.28	7	224.727	4	83.071	5
2368			min	-16.092	2	10.131	7	-70.944	4	180.279	7	-942.448	4	-67.548	5	-276.37	4
2369		5	max	294.295	4	73.73	4	-18.789	7	1884.971	4	-353.656	7	297.146	4	376.68	5
2370			min	-16.092	2	6.598	7	-70.944	4	353.655	7	-1884.974	4	-306.292	5	-365.431	4
2371	M238	1	max	256.282	4	74.343	4	-11.548	7	-297.768	7	1543.36	4	102.003	5	446.908	4
2372			min	2.725	5	14.952	7	-50.857	4	-1543.357	4	297.768	7	-363.398	4	-125.444	5
2373		2	max	256.282	4	68.455	4	-11.548	7	-139.846	7	762.769	4	136.402	5	127.631	4
2374			min	2.725	5	11.419	7	-50.857	4	-762.768	4	139.847	7	-103.782	4	-167.747	5
2375		3	max	256.282	4	62.566	4	-11.548	7	-4.482	7	19.774	4	96.381	5	-70.938	7
2376			min	2.725	5	7.886	7	-50.857	4	-19.774	4	4.482	7	57.683	7	-118.53	5
2377		4	max	256.282	4	56.678	4	-11.548	7	685.624	4	-108.324	7	192.195	4	22.207	5
2378			min	2.725	5	4.353	7	-50.857	4	108.324	7	-685.626	4	-18.058	5	-236.362	4
2379		5	max	256.282	4	50.79	4	-11.548	7	1353.428	4	-198.574	7	228.554	4	254.465	5

Envelope Member Section Stresses (Continued)

	Member	Sec		Axial[psi]	LC	y Shear[psi]	LC	z Shear[psi]	LC	y-Top[psi]	LC	y-Bot[psi]	LC	z-Top[psi]	LC	z-Bot[psi]	LC
2380			min	2.725	5	0.821	7	-50.857	4	198.574	7	-1353.43	4	-206.915	5	-281.077	4
2381	M239	1	max	196.682	4	46.139	4	-2.907	7	-64.851	7	875.577	4	105.404	2	286.096	4
2382			min	9.349	7	5.876	7	-27.857	4	-875.576	4	64.851	7	-232.635	4	-129.626	2
2383		2	max	196.682	4	40.251	4	-2.907	7	-20.052	7	421.917	4	136.21	2	47.692	4
2384			min	9.349	7	2.343	7	-27.857	4	-421.916	4	20.052	7	-38.78	4	-167.511	2
2385		3	max	196.682	4	34.363	4	-2.907	7	4.206	5	5.851	4	92.597	2	-68.358	7
2386			min	9.349	7	-1.19	7	-27.857	4	-5.851	4	-4.206	5	55.585	7	-113.876	2
2387		4	max	196.682	4	28.475	4	-2.907	7	372.618	4	-1.875	7	125.674	4	31.279	2
2388			min	9.349	7	-7.056	2	-27.857	4	1.875	7	-372.619	4	-25.435	2	-154.554	4
2389		5	max	196.682	4	22.587	4	-2.907	7	713.492	4	20.997	7	96.273	4	267.956	2
2390			min	9.349	7	-12.944	2	-27.857	4	-20.997	7	-713.494	4	-217.885	2	-118.397	4
2391	M240	1	max	108.561	4	9.459	4	7.552	2	349.242	2	89.028	4	393.517	2	-215.059	4
2392			min	5.278	7	-11.496	2	-4.975	4	-89.028	4	-349.243	2	174.872	4	-483.949	2
2393		2	max	108.561	4	3.571	4	7.552	2	208.827	2	15.67	4	306.462	2	-233.94	7
2394			min	5.278	7	-17.384	2	-4.975	4	-15.67	4	-208.828	2	190.225	7	-376.889	2
2395		3	max	108.561	4	-2.317	4	7.552	2	30.818	2	-18.499	7	144.988	2	-107.071	7
2396			min	5.278	7	-23.272	2	-4.975	4	18.499	7	-30.818	2	87.063	7	-178.307	2
2397		4	max	108.561	4	-8.206	4	7.552	2	18.261	4	184.788	2	10.016	4	111.794	2
2398			min	5.278	7	-29.16	2	-4.975	4	-184.788	2	-18.261	4	-90.904	2	-12.318	4
2399		5	max	108.561	4	-14.094	4	7.552	2	-21.167	4	437.989	2	-193.774	4	493.416	2
2400			min	5.278	7	-35.049	2	-4.975	4	-437.988	2	21.167	4	-401.215	2	238.304	4
2401	M241	1	max	0.002	7	0	7	-7.285	7	-11.761	7	19.611	5	39.261	4	-26.368	7
2402			min	-0.002	5	0	4	-12.142	4	-19.611	5	11.761	7	23.553	7	-43.953	4
2403		2	max	0.002	7	0	7	-3.643	7	2.449	4	-1.473	7	-2.945	7	5.492	2
2404			min	-0.002	5	0	4	-6.071	4	1.473	7	-2.449	4	-4.906	2	3.297	7
2405		3	max	0.002	7	0	7	0	5	9.8	4	-5.884	7	-11.778	7	21.973	2
2406			min	-0.002	5	0	4	0	7	5.884	7	-9.8	4	-19.627	2	13.186	7
2407		4	max	0.002	7	0	7	6.071	5	2.448	2	-1.473	7	-2.945	7	5.493	4
2408			min	-0.002	5	0	4	3.643	7	1.473	7	-2.448	2	-4.907	4	3.297	7
2409		5	max	0.002	7	0	7	12.142	5	-11.76	7	19.612	5	39.26	5	-26.368	7
2410			min	-0.002	5	0	4	7.285	7	-19.612	5	11.76	7	23.553	7	-43.952	5
2411	M242	1	max	0.002	5	0	7	-7.286	7	-11.768	7	19.609	4	39.262	4	-26.371	7
2412			min	-0.002	7	0	5	-12.143	4	-19.609	4	11.768	7	23.556	7	-43.954	4
2413		2	max	0.002	5	0	7	-3.643	7	2.45	5	-1.467	7	-2.943	7	5.493	5
2414			min	-0.002	7	0	5	-6.071	4	1.467	7	-2.45	5	-4.907	5	3.295	7
2415		3	max	0.002	5	0	7	0	5	9.801	5	-5.88	7	-11.777	7	21.973	4
2416			min	-0.002	7	0	5	0	7	5.88	7	-9.801	5	-19.627	4	13.184	7
2417		4	max	0.002	5	0	7	6.072	5	2.448	4	-1.47	7	-2.944	7	5.495	4
2418			min	-0.002	7	0	5	3.642	7	1.47	7	-2.448	4	-4.908	4	3.296	7
2419		5	max	0.002	5	0	7	12.143	5	-11.762	7	19.611	5	39.26	5	-26.368	7
2420			min	-0.002	7	0	5	7.285	7	-19.611	5	11.762	7	23.553	7	-43.952	5
2421	M243	1	max	0.002	6	0	5	-7.285	7	-11.767	7	19.607	2	39.261	4	-26.371	7
2422			min	-0.002	7	0	4	-12.142	5	-19.607	2	11.767	7	23.556	7	-43.953	4
2423		2	max	0.002	6	0	5	-3.643	7	2.453	5	-1.466	7	-2.942	7	5.494	5
2424			min	-0.002	7	0	4	-6.071	5	1.466	7	-2.453	5	-4.908	5	3.294	7
2425		3	max	0.002	6	0	5	0	7	9.805	5	-5.877	7	-11.775	7	21.975	5
2426			min	-0.002	7	0	4	0	5	5.877	7	-9.805	5	-19.629	5	13.182	7
2427		4	max	0.002	6	0	5	6.071	2	2.453	5	-1.465	7	-2.942	7	5.494	6
2428			min	-0.002	7	0	4	3.643	7	1.465	7	-2.453	5	-4.908	6	3.294	7
2429		5	max	0.002	6	0	5	12.142	2	-11.769	7	19.608	4	39.258	2	-26.372	7
2430			min	-0.002	7	0	4	7.285	7	-19.608	4	11.769	7	23.556	7	-43.95	2
2431	M244	1	max	0.002	7	0	5	-7.285	7	-11.761	7	19.611	5	39.262	4	-26.368	7
2432			min	-0.002	6	0	7	-12.143	6	-19.611	5	11.761	7	23.554	7	-43.954	4
2433		2	max	0.002	7	0	5	-3.642	7	2.449	2	-1.471	7	-2.944	7	5.492	2
2434			min	-0.002	6	0	7	-6.072	6	1.471	7	-2.449	2	-4.906	2	3.296	7

Envelope Member Section Stresses (Continued)

	Member	Sec		Axial[psi]	LC	y Shear[psi]	LC	z Shear[psi]	LC	y-Top[psi]	LC	y-Bot[psi]	LC	z-Top[psi]	LC	z-Bot[psi]	LC
2435		3	max	0.002	7	0	5	0	7	9.801	2	-5.881	7	-11.776	7	21.973	4
2436			min	-0.002	6	0	7	0	6	5.881	7	-9.801	2	-19.628	4	13.184	7
2437		4	max	0.002	7	0	5	6.071	2	2.45	5	-1.468	7	-2.943	7	5.495	4
2438			min	-0.002	6	0	7	3.643	7	1.468	7	-2.45	5	-4.908	4	3.295	7
2439		5	max	0.002	7	0	5	12.142	2	-11.767	7	19.607	2	39.258	2	-26.371	7
2440			min	-0.002	6	0	7	7.286	7	-19.607	2	11.767	7	23.556	7	-43.95	2

Envelope AISC 15TH (360-16): ASD Member Steel Code Checks

	Member	Shape	Code Check	Loc[ft]	LC	Shear Check	Loc[ft]	Dir	LC	Pnc/om [lb]	Pnt/om [lb]	Mnyy/om [lb-ft]	Mnzz/om [lb-ft]	Cb	Eqn
1	M1	L3X3X4	0.222	0	4	0.01	3	y	4	21908.629	25868.263	935.983	2082.36	1.5	H2-1
2	M2	L3X3X4	0.275	2.333	4	0.031	2.333	z	4	23395.493	25868.263	935.983	2082.36	1.5	H2-1
3	M3	L3X3X4	0.257	0	5	0.018	2.333	z	4	23395.493	25868.263	935.983	2082.36	1.227	H2-1
4	M4	L3X3X4	0.443	0	4	0.037	2.833	y	4	22306.147	25868.263	935.983	2082.36	1.5	H2-1
5	M5	L3X3X4	0.507	2.333	5	0.058	2.333	y	4	23395.493	25868.263	935.983	2082.36	1.5	H2-1
6	M6	L3X3X4	0.591	2.333	5	0.056	2.333	y	4	23395.493	25868.263	935.983	2082.36	1.5	H2-1
7	M7	L3X3X4	0.432	0	5	0.034	2.833	y	4	22306.147	25868.263	935.983	2082.36	1.5	H2-1
8	M8	L3X3X4	0.241	0	5	0.017	2.333	z	4	23395.493	25868.263	935.983	2082.36	1.5	H2-1
9	M9	L3X3X4	0.414	2.333	4	0.027	2.333	y	4	23395.493	25868.263	935.983	2082.36	1.5	H2-1
10	M10	L3X3X4	0.17	3	5	0.006	3	y	4	21908.629	25868.263	935.983	2082.36	1.5	H2-1
11	M11	L3X3X4	0.575	2.333	4	0.059	2.333	y	4	23395.493	25868.263	935.983	2082.36	1.5	H2-1
12	M12	L3X3X4	0.525	0	4	0.038	2.833	y	4	22306.147	25868.263	935.983	2082.36	1.5	H2-1
13	M13	L3X3X4	0.19	0	4	0.017	2.333	z	4	23395.493	25868.263	935.983	2082.36	1.5	H2-1
14	M14	L3X3X4	0.329	2.333	4	0.032	2.333	z	4	23395.493	25868.263	935.983	2082.36	1.5	H2-1
15	M15	L3X3X4	0.141	0	4	0.008	3	z	4	21908.629	25868.263	935.983	2082.36	1.5	H2-1
16	M16	L3X3X4	0.457	2.333	4	0.056	2.333	y	4	23395.493	25868.263	935.983	2082.36	1.5	H2-1
17	M17	L3X3X4	0.41	0	4	0.034	2.833	y	4	22306.147	25868.263	935.983	2082.36	1.5	H2-1
18	M18	L3X3X4	0.179	2.333	4	0.017	2.333	z	4	23395.493	25868.263	935.983	2082.36	1.5	H2-1
19	M19	L3X3X4	0.428	2.333	4	0.028	2.333	y	4	23395.493	25868.263	935.983	2082.36	1.5	H2-1
20	M20	L3X3X4	0.12	0	4	0.006	3	y	4	21908.629	25868.263	935.983	2082.36	1.5	H2-1
21	M21	C8X11.5	0.241	6.75	5	0.029	6.75	y	5	28870.764	60538.922	1858.842	14416.168	1.704	H1-1b
22	M22	L2X2X4	0.566	3	4	0.026	0	z	4	11601.334	16958.084	383.086	874.279	1.5	H2-1
23	M23	C8X11.5	0.241	0	3	0.029	0	y	2	28870.764	60538.922	1858.842	14416.168	1.704	H1-1b
24	M24	C8X11.5	0.241	0	5	0.029	0	y	5	28870.764	60538.922	1858.842	14416.168	1.704	H1-1b
25	M25	L2X2X4	0.57	3	4	0.026	0	z	4	11601.334	16958.084	383.086	874.279	1.5	H2-1
26	M26	C8X11.5	0.241	6.75	6	0.029	6.75	y	6	28870.764	60538.922	1858.842	14416.168	1.704	H1-1b
27	M27	C8X11.5	0.241	6.75	2	0.029	6.75	y	6	28870.764	60538.922	1858.842	14416.168	1.704	H1-1b
28	M28	L2X2X4	0.689	3	4	0.016	0	z	4	11601.334	16958.084	383.086	874.279	1.5	H2-1
29	M29	C8X11.5	0.241	0	2	0.029	0	y	6	28870.764	60538.922	1858.842	14416.168	1.704	H1-1b
30	M30	C8X11.5	0.241	6.75	6	0.029	6.75	y	6	28870.764	60538.922	1858.842	14416.168	1.704	H1-1b
31	M31	L2X2X4	0.695	3	4	0.016	0	z	4	11601.334	16958.084	383.086	874.279	1.5	H2-1
32	M32	C8X11.5	0.241	0	3	0.029	0	y	2	28870.764	60538.922	1858.842	14416.168	1.704	H1-1b
33	M33	L4X4X8	0.525	3	4	0.047	3	z	4	61295.843	67365.269	3038.593	6971.962	1.5	H2-1
34	M34	L4X4X8	0.305	3	4	0.04	3	z	4	61295.843	67365.269	3038.593	6971.962	1.5	H2-1
35	M35	L4X4X8	0.521	0	4	0.048	3	z	4	61295.843	67365.269	3038.593	6971.962	1.5	H2-1
36	M36	L4X4X8	0.308	3	4	0.039	3	z	4	61295.843	67365.269	3038.593	6971.962	1.5	H2-1
37	M37	L4X4X8	0.553	3	4	0.051	3	y	4	61295.843	67365.269	3038.593	6971.962	1.5	H2-1
38	M38	L4X4X8	0.448	0	4	0.058	3	y	4	61295.843	67365.269	3038.593	6971.962	1.5	H2-1
39	M39	L4X4X8	0.556	0	4	0.052	3	y	4	61295.843	67365.269	3038.593	6971.962	1.5	H2-1
40	M40	L4X4X8	0.444	3	4	0.059	3	y	4	61295.843	67365.269	3038.593	6971.962	1.5	H2-1
41	M41	L2X2X4	0.753	3	4	0.018	3	y	4	11601.334	16958.084	383.086	874.279	1.5	H2-1
42	M42	L2X2X4	0.543	3	4	0.027	0	z	4	11601.334	16958.084	383.086	874.279	1.5	H2-1
43	M43	L2X2X4	0.756	3	4	0.018	3	y	4	11601.334	16958.084	383.086	874.279	1.5	H2-1
44	M44	L2X2X4	0.548	3	4	0.028	0	z	4	11601.334	16958.084	383.086	874.279	1.5	H2-1
45	M45	C8X11.5	0.339	0	4	0.025	0.031	y	4	52301.413	60538.922	1858.842	14416.168	1.169	H1-1b
46	M46	C8X11.5	0.364	0	4	0.029	1.375	y	4	52301.413	60538.922	1858.842	14416.168	1.164	H1-1b

Envelope AISC 15TH (360-16): ASD Member Steel Code Checks (Continued)

	Member	Shape	Code Check	Loc[ft]	LC	Shear Check	Loc[ft]	Dir	LC	Pnc/om [lb]	Pnt/om [lb]	Mnyy/om [lb-ft]	Mnzz/om [lb-ft]	Cb	Eqn
47	M47	C8X11.5	0.34	0	4	0.026	0.188	y	4	52301.413	60538.922	1858.842	14416.168	1.173	H1-1b
48	M48	C8X11.5	0.366	0	4	0.03	1.375	y	4	52301.413	60538.922	1858.842	14416.168	1.166	H1-1b
49	M49	L2X2X4	0.199	0	4	0.007	4.243	z	4	7936.684	16958.084	383.086	870.335	1.5	H2-1
50	M50	L2X2X4	0.327	4.243	4	0.007	4.243	z	4	7936.684	16958.084	383.086	870.335	1.5	H2-1
51	M51	L2X2X4	0.2	0	4	0.007	4.243	z	4	7936.684	16958.084	383.086	870.335	1.5	H2-1
52	M52	L2X2X4	0.324	4.243	4	0.007	4.243	z	4	7936.684	16958.084	383.086	870.335	1.5	H2-1
53	M53	L2X2X4	0.576	0	4	0.005	3.8	z	4	9221.487	16958.084	383.086	874.279	1.5	H2-1
54	M54	L2X2X4	0.441	3.8	4	0.01	3.8	z	4	9221.487	16958.084	383.086	874.279	1.5	H2-1
55	M55	L2X2X4	0.566	0	4	0.005	3.8	z	4	9221.487	16958.084	383.086	874.279	1.5	H2-1
56	M56	L2X2X4	0.443	3.8	4	0.01	3.8	z	4	9221.487	16958.084	383.086	874.279	1.5	H2-1
57	M57	L2X2X4	0.618	0	4	0.004	3.8	y	4	9221.487	16958.084	383.086	854.031	1.183	H2-1
58	M58	L2X2X4	0.455	3.8	4	0.011	3.8	y	4	9221.487	16958.084	383.086	874.279	1.5	H2-1
59	M59	L2X2X4	0.619	0	4	0.003	3.8	z	4	9221.487	16958.084	383.086	857.899	1.219	H2-1
60	M60	L2X2X4	0.455	3.8	4	0.011	3.8	y	4	9221.487	16958.084	383.086	874.279	1.5	H2-1
61	M61	L2X2X4	0.599	0	4	0.012	4.126	z	4	8269.583	16958.084	383.086	873.771	1.5	H2-1
62	M62	L2X2X4	0.463	4.126	4	0.009	4.126	y	4	8269.583	16958.084	383.086	873.771	1.5	H2-1
63	M63	L2X2X4	0.598	0	4	0.012	4.126	z	4	8269.583	16958.084	383.086	873.771	1.5	H2-1
64	M64	L2X2X4	0.464	4.126	4	0.009	4.126	y	4	8269.583	16958.084	383.086	873.771	1.5	H2-1
65	M65	L2X2X4	0.54	0	4	0.009	0	y	2	9221.487	16958.084	383.086	874.279	1.5	H2-1
66	M66	L2X2X4	0.46	0	4	0.009	0	y	2	9221.487	16958.084	383.086	874.279	1.5	H2-1
67	M67	L2X2X4	0.541	0	4	0.01	0	y	5	9221.487	16958.084	383.086	874.279	1.5	H2-1
68	M68	L2X2X4	0.456	0	4	0.009	0	y	5	9221.487	16958.084	383.086	874.279	1.5	H2-1
69	M73	L2.5X2.5X4	0.062	5.5	4	0.002	5.5	y	4	9391.189	21377.246	617.407	1339.391	1.5	H2-1
70	M74	L2.5X2.5X4	0.132	5.5	4	0.003	5.5	y	4	9391.189	21377.246	617.407	1339.391	1.5	H2-1
71	M75	L2.5X2.5X4	0.259	5.5	2	0.004	5.5	y	4	9391.189	21377.246	617.407	1339.391	1.5	H2-1
72	M76	L2.5X2.5X4	0.408	5.5	2	0.004	5.5	y	4	9391.189	21377.246	617.407	1339.391	1.5	H2-1
73	M77	L3X3X4	0.403	5.5	5	0.005	5.5	y	4	14799.81	25868.263	935.983	1979.848	1.5	H2-1
74	M78	L3X3X4	0.551	5.5	5	0.005	5.5	y	4	14799.81	25868.263	935.983	1979.848	1.5	H2-1
75	M79	L3X3X4	0.478	3	4	0.01	3	z	4	21908.629	25868.263	935.983	2082.36	1.5	H2-1
76	M80	L3X3X4	0.574	0	4	0.01	3	z	4	21908.629	25868.263	935.983	2082.36	1.5	H2-1
77	M81	L3X3X4	0.632	0	4	0.005	0	y	2	14799.81	25868.263	935.983	1920.631	1.271	H2-1
78	M82	L3X3X4	0.482	0	4	0.004	0	y	2	14799.81	25868.263	935.983	1979.848	1.5	H2-1
79	M83	L2.5X2.5X4	0.53	0	4	0.004	0	y	2	9391.189	21377.246	617.407	1339.391	1.5	H2-1
80	M84	L2.5X2.5X4	0.356	0	4	0.003	0	y	2	9391.189	21377.246	617.407	1339.391	1.5	H2-1
81	M85	L2.5X2.5X4	0.194	0	4	0.003	0	y	5	9391.189	21377.246	617.407	1339.391	1.5	H2-1
82	M86	L2.5X2.5X4	0.084	0	4	0.003	0	y	5	9391.189	21377.246	617.407	1339.391	1.5	H2-1
83	M87	L2.5X2.5X4	0.018	5.5	4	0.002	5.5	z	4	9391.189	21377.246	617.407	1339.391	1.5	H2-1
84	M88	L2.5X2.5X4	0.036	5.5	4	0.002	5.5	z	4	9391.189	21377.246	617.407	1339.391	1.5	H2-1
85	M89	L2.5X2.5X4	0.086	5.5	4	0.003	5.5	z	4	9391.189	21377.246	617.407	1339.391	1.5	H2-1
86	M90	L2.5X2.5X4	0.172	5.5	4	0.004	5.5	z	4	9391.189	21377.246	617.407	1339.391	1.5	H2-1
87	M91	L3X3X4	0.215	5.5	4	0.003	5.5	y	4	14799.81	25868.263	935.983	1979.848	1.5	H2-1
88	M92	L3X3X4	0.336	5.5	4	0.006	5.5	z	4	14799.81	25868.263	935.983	1979.848	1.5	H2-1
89	M93	L3X3X4	0.686	3	4	0.015	3	z	4	21908.629	25868.263	935.983	2082.36	1.5	H2-1
90	M94	L3X3X4	0.389	0	2	0.012	3	z	4	21908.629	25868.263	935.983	2082.36	1.491	H2-1
91	M95	L3X3X4	0.276	0	5	0.004	0	z	2	14799.81	25868.263	935.983	1951.998	1.385	H2-1
92	M96	L3X3X4	0.19	0	2	0.004	5.5	z	4	14799.81	25868.263	935.983	1979.848	1.5	H2-1
93	M97	L2.5X2.5X4	0.153	0	5	0.003	5.5	z	4	9391.189	21377.246	617.407	1339.391	1.5	H2-1
94	M98	L2.5X2.5X4	0.092	0	5	0.003	5.5	z	4	9391.189	21377.246	617.407	1339.391	1.5	H2-1
95	M99	L2.5X2.5X4	0.045	0	5	0.002	5.5	z	4	9391.189	21377.246	617.407	1339.391	1.5	H2-1
96	M100	L2.5X2.5X4	0.028	0	5	0.003	0	z	5	9391.189	21377.246	617.407	1339.391	1.5	H2-1
97	M101	L2X2X4	0.095	3	4	0.009	3	y	4	11601.334	16958.084	383.086	874.279	1.5	H2-1
98	M102	L2X2X4	0.065	0	4	0.005	3	z	4	11601.334	16958.084	383.086	874.279	1.5	H2-1
99	M103	L2X2X4	0.246	0	4	0.009	3	y	4	11601.334	16958.084	383.086	874.279	1.5	H2-1
100	M104	L2X2X4	0.19	0	4	0.006	3	z	4	11601.334	16958.084	383.086	874.279	1.5	H2-1
101	M105	L2X2X4	0.227	0	4	0.008	3	y	4	11601.334	16958.084	383.086	874.279	1.5	H2-1

Envelope AISC 15TH (360-16): ASD Member Steel Code Checks (Continued)

	Member	Shape	Code Check	Loc[ft]	LC	Shear Check	Loc[ft]	Dir	LC	Pnc/om [lb]	Pnt/om [lb]	Mnyy/om [lb-ft]	Mnzz/om [lb-ft]	Cb	Eqn
102	M106	L2X2X4	0.183	0	4	0.006	3	z	4	11601.334	16958.084	383.086	874.279	1.5	H2-1
103	M107	L2X2X4	0.18	0	4	0.008	3	y	4	11601.334	16958.084	383.086	874.279	1.5	H2-1
104	M108	L2X2X4	0.15	0	4	0.006	3	z	4	11601.334	16958.084	383.086	874.279	1.5	H2-1
105	M109	L2X2X4	0.138	0	4	0.006	3	y	4	11601.334	16958.084	383.086	874.279	1.5	H2-1
106	M110	L2X2X4	0.117	0	4	0.004	3	z	4	11601.334	16958.084	383.086	874.279	1.5	H2-1
107	M111	L2X2X4	0.081	0	4	0.004	3	y	4	11601.334	16958.084	383.086	874.279	1.5	H2-1
108	M112	L2X2X4	0.064	0	4	0.002	3	z	4	11601.334	16958.084	383.086	874.279	1.5	H2-1
109	M113	L2X2X4	0.031	0	4	0.002	3	z	5	11601.334	16958.084	383.086	874.279	1.5	H2-1
110	M114	L2X2X4	0.059	0	5	0.003	3	z	5	11601.334	16958.084	383.086	874.279	1.5	H2-1
111	M115	L2X2X4	0.221	0	4	0.003	6.265	y	4	3759.868	16958.084	383.086	816.81	1.5	H2-1
112	M116	L2X2X4	0.186	6.265	4	0.003	6.265	y	4	3759.868	16958.084	383.086	816.81	1.5	H2-1
113	M117	L2X2X4	0.146	0	4	0.003	6.265	y	4	3759.868	16958.084	383.086	816.81	1.5	H2-1
114	M118	L2X2X4	0.117	6.265	4	0.002	6.265	y	4	3759.868	16958.084	383.086	816.81	1.5	H2-1
115	M119	L2X2X4	0.081	6.265	4	0.002	6.265	y	4	3759.868	16958.084	383.086	816.81	1.5	H2-1
116	M120	L2X2X4	0.047	0	4	0.002	0	y	5	3759.868	16958.084	383.086	816.81	1.5	H2-1
117	M121	L2X2X4	0.055	6.265	5	0.002	6.265	y	4	3759.868	16958.084	383.086	808.768	1.423	H2-1
118	M122	L2X2X4	0.086	6.265	5	0.002	6.265	y	4	3759.868	16958.084	383.086	816.81	1.5	H2-1
119	M123	L2X2X4	0.118	6.265	5	0.003	6.265	y	4	3759.868	16958.084	383.086	816.81	1.5	H2-1
120	M124	L2X2X4	0.135	6.265	2	0.003	6.265	y	4	3759.868	16958.084	383.086	816.81	1.5	H2-1
121	M125	L2X2X4	0.162	6.265	2	0.003	6.265	y	5	3759.868	16958.084	383.086	816.81	1.5	H2-1
122	M126	L2X2X4	0.187	6.265	5	0.004	6.265	y	4	3759.868	16958.084	383.086	816.81	1.5	H2-1
123	M127	L3X3X4	0.233	0	4	0.009	4.243	y	4	18555.093	25868.263	935.983	2063.291	1.5	H2-1
124	M128	L3X3X4	0.179	4.243	4	0.009	4.243	y	4	18555.093	25868.263	935.983	2063.291	1.5	H2-1
125	M129	L2X2X4	0.112	0	4	0.003	4.243	y	2	7936.684	16958.084	383.086	870.335	1.5	H2-1
126	M130	L2X2X4	0.09	0	4	0.005	0	y	4	3759.868	16958.084	383.086	816.81	1.5	H2-1
127	M131	L2X2X4	0.094	0	4	0.004	0	y	4	3759.868	16958.084	383.086	816.81	1.5	H2-1
128	M132	L2X2X4	0.087	0	4	0.004	0	y	4	3759.868	16958.084	383.086	816.81	1.5	H2-1
129	M133	L2X2X4	0.081	0	4	0.003	0	y	4	3759.868	16958.084	383.086	816.81	1.5	H2-1
130	M134	L2X2X4	0.067	0	4	0.003	0	y	4	3759.868	16958.084	383.086	816.81	1.5	H2-1
131	M135	L2X2X4	0.052	0	4	0.002	0	y	4	3759.868	16958.084	383.086	816.81	1.5	H2-1
132	M136	L2X2X4	0.106	0	4	0.01	0	z	4	7936.684	16958.084	383.086	870.335	1.5	H2-1
133	M137	L2X2X4	0.089	0	4	0.005	0	z	4	3759.868	16958.084	383.086	816.81	1.5	H2-1
134	M138	L2X2X4	0.088	0	4	0.004	0	z	4	3759.868	16958.084	383.086	816.81	1.5	H2-1
135	M139	L2X2X4	0.078	0	4	0.004	0	z	4	3759.868	16958.084	383.086	816.81	1.5	H2-1
136	M140	L2X2X4	0.057	0	4	0.003	0	z	4	3759.868	16958.084	383.086	816.81	1.5	H2-1
137	M141	L2X2X4	0.042	0	4	0.002	0	z	4	3759.868	16958.084	383.086	816.81	1.5	H2-1
138	M142	L2X2X4	0.038	0	5	0.002	0	z	4	3759.868	16958.084	383.086	787.831	1.249	H2-1
139	M143	L2X2X4	0.06	3	5	0.005	3	y	5	11601.334	16958.084	383.086	874.279	1.5	H2-1
140	M144	L2X2X4	0.158	0	4	0.01	0	z	4	11601.334	16958.084	383.086	874.279	1.5	H2-1
141	M145	L2X2X4	0.138	0	4	0.009	0	z	4	11601.334	16958.084	383.086	874.279	1.5	H2-1
142	M146	L2X2X4	0.122	0	4	0.008	0	z	4	11601.334	16958.084	383.086	874.279	1.5	H2-1
143	M147	L2X2X4	0.087	0	4	0.006	0	z	4	11601.334	16958.084	383.086	874.279	1.5	H2-1
144	M148	L2X2X4	0.048	0	4	0.004	0	z	4	11601.334	16958.084	383.086	874.279	1.5	H2-1
145	M149	L2X2X4	0.027	3	5	0.003	3	z	5	11601.334	16958.084	383.086	874.279	1.5	H2-1
146	M150	L2X2X4	0.147	3	4	0.008	3	z	4	11601.334	16958.084	383.086	874.279	1.5	H2-1
147	M151	L2X2X4	0.144	0	4	0.01	0	y	4	11601.334	16958.084	383.086	874.279	1.5	H2-1
148	M152	L2X2X4	0.14	0	4	0.01	0	y	4	11601.334	16958.084	383.086	874.279	1.5	H2-1
149	M153	L2X2X4	0.125	0	4	0.008	0	y	4	11601.334	16958.084	383.086	874.279	1.5	H2-1
150	M154	L2X2X4	0.095	0	4	0.006	0	y	4	11601.334	16958.084	383.086	874.279	1.5	H2-1
151	M155	L2X2X4	0.059	0	4	0.004	0	y	4	11601.334	16958.084	383.086	874.279	1.5	H2-1
152	M156	L2X2X4	0.028	3	5	0.003	3	y	5	11601.334	16958.084	383.086	874.279	1.5	H2-1
153	M157	L2.5X2.5X4	0.117	5.5	4	0.002	5.5	y	4	9391.189	21377.246	617.407	1339.391	1.5	H2-1
154	M158	L2.5X2.5X4	0.213	5.5	4	0.003	5.5	y	4	9391.189	21377.246	617.407	1339.391	1.5	H2-1
155	M159	L2.5X2.5X4	0.341	5.5	5	0.004	5.5	y	4	9391.189	21377.246	617.407	1339.391	1.5	H2-1
156	M160	L2.5X2.5X4	0.497	5.5	5	0.005	5.5	y	4	9391.189	21377.246	617.407	1339.391	1.5	H2-1

Envelope AISC 15TH (360-16): ASD Member Steel Code Checks (Continued)

	Member	Shape	Code Check	Loc[ft]	LC	Shear Check	Loc[ft]	Dir	LC	Pnc/om [lb]	Pnt/om [lb]	Mnyy/om [lb-ft]	Mnzz/om [lb-ft]	Cb	Eqn
157	M161	L3X3X4	0.444	5.5	2	0.005	5.5	y	4	14799.81	25868.263	935.983	1979.848	1.5	H2-1
158	M162	L3X3X4	0.583	5.5	2	0.005	5.5	y	4	14799.81	25868.263	935.983	1979.848	1.5	H2-1
159	M163	L3X3X4	0.505	3	4	0.01	3	z	4	21908.629	25868.263	935.983	2082.36	1.5	H2-1
160	M164	L3X3X4	0.583	0	4	0.01	3	z	4	21908.629	25868.263	935.983	2082.36	1.5	H2-1
161	M165	L3X3X4	0.643	0	4	0.005	0	y	5	14799.81	25868.263	935.983	1929.932	1.303	H2-1
162	M166	L3X3X4	0.513	0	4	0.005	0	y	5	14799.81	25868.263	935.983	1979.848	1.5	H2-1
163	M167	L2.5X2.5X4	0.611	0	4	0.004	0	y	5	9391.189	21377.246	617.407	1339.391	1.5	H2-1
164	M168	L2.5X2.5X4	0.436	0	4	0.003	0	y	5	9391.189	21377.246	617.407	1339.391	1.5	H2-1
165	M169	L2.5X2.5X4	0.276	0	4	0.003	0	y	2	9391.189	21377.246	617.407	1339.391	1.5	H2-1
166	M170	L2.5X2.5X4	0.141	0	4	0.003	0	y	2	9391.189	21377.246	617.407	1339.391	1.5	H2-1
167	M171	L2.5X2.5X4	0.022	5.5	4	0.002	5.5	z	4	9391.189	21377.246	617.407	1339.391	1.5	H2-1
168	M172	L2.5X2.5X4	0.063	5.5	4	0.003	5.5	z	4	9391.189	21377.246	617.407	1339.391	1.5	H2-1
169	M173	L2.5X2.5X4	0.121	5.5	4	0.003	5.5	z	4	9391.189	21377.246	617.407	1339.391	1.5	H2-1
170	M174	L2.5X2.5X4	0.211	5.5	4	0.005	5.5	z	4	9391.189	21377.246	617.407	1339.391	1.5	H2-1
171	M175	L3X3X4	0.246	5.5	4	0.003	5.5	y	4	14799.81	25868.263	935.983	1979.848	1.5	H2-1
172	M176	L3X3X4	0.364	5.5	4	0.007	5.5	z	4	14799.81	25868.263	935.983	1979.848	1.5	H2-1
173	M177	L3X3X4	0.68	3	4	0.014	3	z	4	21908.629	25868.263	935.983	2082.36	1.5	H2-1
174	M178	L3X3X4	0.407	0	5	0.012	3	z	4	21908.629	25868.263	935.983	2082.36	1.134	H2-1
175	M179	L3X3X4	0.288	0	2	0.004	0	z	5	14799.81	25868.263	935.983	1921.605	1.274	H2-1
176	M180	L3X3X4	0.217	0	5	0.004	5.5	z	4	14799.81	25868.263	935.983	1962.37	1.426	H2-1
177	M181	L2.5X2.5X4	0.19	0	2	0.004	5.5	z	4	9391.189	21377.246	617.407	1339.391	1.5	H2-1
178	M182	L2.5X2.5X4	0.126	0	2	0.003	5.5	z	4	9391.189	21377.246	617.407	1339.391	1.5	H2-1
179	M183	L2.5X2.5X4	0.072	0	2	0.003	5.5	z	4	9391.189	21377.246	617.407	1339.391	1.5	H2-1
180	M184	L2.5X2.5X4	0.034	0	2	0.003	0	z	2	9391.189	21377.246	617.407	1339.391	1.5	H2-1
181	M185	L2X2X4	0.103	3	4	0.009	3	y	4	11601.334	16958.084	383.086	874.279	1.5	H2-1
182	M186	L2X2X4	0.072	0	4	0.006	3	z	4	11601.334	16958.084	383.086	874.279	1.5	H2-1
183	M187	L2X2X4	0.245	0	4	0.01	3	y	4	11601.334	16958.084	383.086	874.279	1.5	H2-1
184	M188	L2X2X4	0.187	0	4	0.007	3	z	4	11601.334	16958.084	383.086	874.279	1.5	H2-1
185	M189	L2X2X4	0.224	0	4	0.009	3	y	4	11601.334	16958.084	383.086	874.279	1.5	H2-1
186	M190	L2X2X4	0.177	0	4	0.007	3	z	4	11601.334	16958.084	383.086	874.279	1.5	H2-1
187	M191	L2X2X4	0.187	0	4	0.008	3	y	4	11601.334	16958.084	383.086	874.279	1.5	H2-1
188	M192	L2X2X4	0.157	0	4	0.006	3	z	4	11601.334	16958.084	383.086	874.279	1.5	H2-1
189	M193	L2X2X4	0.144	0	4	0.006	3	y	4	11601.334	16958.084	383.086	874.279	1.5	H2-1
190	M194	L2X2X4	0.123	0	4	0.005	3	z	4	11601.334	16958.084	383.086	874.279	1.5	H2-1
191	M195	L2X2X4	0.095	0	4	0.004	3	y	4	11601.334	16958.084	383.086	874.279	1.5	H2-1
192	M196	L2X2X4	0.08	0	4	0.003	3	z	4	11601.334	16958.084	383.086	874.279	1.5	H2-1
193	M197	L2X2X4	0.025	3	2	0.002	3	y	2	11601.334	16958.084	383.086	874.279	1.5	H2-1
194	M198	L2X2X4	0.051	0	2	0.004	3	z	2	11601.334	16958.084	383.086	874.279	1.5	H2-1
195	M199	L2X2X4	0.209	0	4	0.004	6.265	y	4	3759.868	16958.084	383.086	816.81	1.5	H2-1
196	M200	L2X2X4	0.175	6.265	4	0.003	6.265	y	4	3759.868	16958.084	383.086	816.81	1.5	H2-1
197	M201	L2X2X4	0.151	0	4	0.003	6.265	y	4	3759.868	16958.084	383.086	816.81	1.5	H2-1
198	M202	L2X2X4	0.121	6.265	4	0.003	6.265	y	4	3759.868	16958.084	383.086	816.81	1.5	H2-1
199	M203	L2X2X4	0.099	6.265	4	0.002	6.265	y	4	3759.868	16958.084	383.086	816.81	1.5	H2-1
200	M204	L2X2X4	0.08	0	4	0.002	0	y	2	3759.868	16958.084	383.086	816.81	1.5	H2-1
201	M205	L2X2X4	0.09	6.265	2	0.003	6.265	y	4	3759.868	16958.084	383.086	816.81	1.5	H2-1
202	M206	L2X2X4	0.106	6.265	2	0.003	6.265	y	4	3759.868	16958.084	383.086	816.81	1.5	H2-1
203	M207	L2X2X4	0.121	6.265	2	0.003	6.265	y	4	3759.868	16958.084	383.086	816.81	1.5	H2-1
204	M208	L2X2X4	0.14	6.265	5	0.003	6.265	y	4	3759.868	16958.084	383.086	816.81	1.5	H2-1
205	M209	L2X2X4	0.149	6.265	5	0.003	6.265	y	2	3759.868	16958.084	383.086	816.81	1.5	H2-1
206	M210	L2X2X4	0.171	6.265	2	0.004	6.265	y	4	3759.868	16958.084	383.086	816.81	1.5	H2-1
207	M211	L3X3X4	0.194	0	4	0.009	4.243	y	4	18555.093	25868.263	935.983	2063.291	1.5	H2-1
208	M212	L3X3X4	0.166	4.243	4	0.009	4.243	y	4	18555.093	25868.263	935.983	2063.291	1.5	H2-1
209	M213	L2X2X4	0.111	0	4	0.003	4.243	y	5	7936.684	16958.084	383.086	870.335	1.5	H2-1
210	M214	L2X2X4	0.09	0	4	0.005	0	y	4	3759.868	16958.084	383.086	816.81	1.5	H2-1
211	M215	L2X2X4	0.092	0	4	0.004	0	y	4	3759.868	16958.084	383.086	816.81	1.5	H2-1

Envelope AISC 15TH (360-16): ASD Member Steel Code Checks (Continued)

	Member	Shape	Code Check	Loc[ft]	LC	Shear Check	Loc[ft]	Dir	LC	Pnc/om [lb]	Pnt/om [lb]	Mnyy/om [lb-ft]	Mnzz/om [lb-ft]	Cb	Eqn
212	M216	L2X2X4	0.087	0	4	0.004	0	y	4	3759.868	16958.084	383.086	816.81	1.5	H2-1
213	M217	L2X2X4	0.08	0	4	0.004	0	y	4	3759.868	16958.084	383.086	816.81	1.5	H2-1
214	M218	L2X2X4	0.068	0	4	0.003	0	y	4	3759.868	16958.084	383.086	816.81	1.5	H2-1
215	M219	L2X2X4	0.054	0	4	0.002	0	y	4	3759.868	16958.084	383.086	816.81	1.5	H2-1
216	M220	L2X2X4	0.109	0	4	0.01	0	z	4	7936.684	16958.084	383.086	870.335	1.5	H2-1
217	M221	L2X2X4	0.094	0	4	0.005	0	z	4	3759.868	16958.084	383.086	816.81	1.5	H2-1
218	M222	L2X2X4	0.089	0	4	0.004	0	z	4	3759.868	16958.084	383.086	816.81	1.5	H2-1
219	M223	L2X2X4	0.081	0	4	0.004	0	z	4	3759.868	16958.084	383.086	816.81	1.5	H2-1
220	M224	L2X2X4	0.058	0	4	0.003	0	z	4	3759.868	16958.084	383.086	816.81	1.5	H2-1
221	M225	L2X2X4	0.044	0	4	0.003	0	z	4	3759.868	16958.084	383.086	816.81	1.5	H2-1
222	M226	L2X2X4	0.042	0	2	0.002	0	z	4	3759.868	16958.084	383.086	789.139	1.259	H2-1
223	M227	L2X2X4	0.059	3	2	0.004	3	z	5	11601.334	16958.084	383.086	874.279	1.5	H2-1
224	M228	L2X2X4	0.165	0	4	0.01	0	z	4	11601.334	16958.084	383.086	874.279	1.5	H2-1
225	M229	L2X2X4	0.142	0	4	0.009	0	z	4	11601.334	16958.084	383.086	874.279	1.5	H2-1
226	M230	L2X2X4	0.127	0	4	0.009	0	z	4	11601.334	16958.084	383.086	874.279	1.5	H2-1
227	M231	L2X2X4	0.091	0	4	0.007	0	z	4	11601.334	16958.084	383.086	874.279	1.5	H2-1
228	M232	L2X2X4	0.051	0	4	0.004	0	z	4	11601.334	16958.084	383.086	874.279	1.5	H2-1
229	M233	L2X2X4	0.035	3	2	0.004	3	z	2	11601.334	16958.084	383.086	874.279	1.5	H2-1
230	M234	L2X2X4	0.149	3	4	0.008	3	z	4	11601.334	16958.084	383.086	874.279	1.5	H2-1
231	M235	L2X2X4	0.148	0	4	0.011	0	y	4	11601.334	16958.084	383.086	874.279	1.5	H2-1
232	M236	L2X2X4	0.142	0	4	0.01	0	y	4	11601.334	16958.084	383.086	874.279	1.5	H2-1
233	M237	L2X2X4	0.128	0	4	0.009	0	y	4	11601.334	16958.084	383.086	874.279	1.5	H2-1
234	M238	L2X2X4	0.099	0	4	0.007	0	y	4	11601.334	16958.084	383.086	874.279	1.5	H2-1
235	M239	L2X2X4	0.061	0	4	0.005	0	y	4	11601.334	16958.084	383.086	874.279	1.5	H2-1
236	M240	L2X2X4	0.036	3	2	0.004	3	y	2	11601.334	16958.084	383.086	874.279	1.5	H2-1
237	M241	L5X5X6	0.002	3	5	0.001	3	z	5	61844.236	65568.862	4112.69	8873.644	1.5	H2-1
238	M242	L5X5X6	0.002	3	5	0.001	3	z	5	61844.236	65568.862	4112.69	8873.644	1.5	H2-1
239	M243	L5X5X6	0.002	0	4	0.001	3	z	2	61844.236	65568.862	4112.69	8873.644	1.5	H2-1
240	M244	L5X5X6	0.002	0	6	0.001	0	z	6	61844.236	65568.862	4112.69	8873.644	1.5	H2-1

Larson Engineering, Inc.
1488 Bond Street, Suite 100
Naperville, IL 60563-6503
630.357.0540   Fax: 630.357.0164
www.larsonengr.com

Larson

Clarifiers Walkway, Scum Box, Drive Shaft, and Rake Arms
Cottage Grove, OR

Walkway

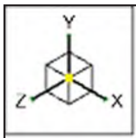

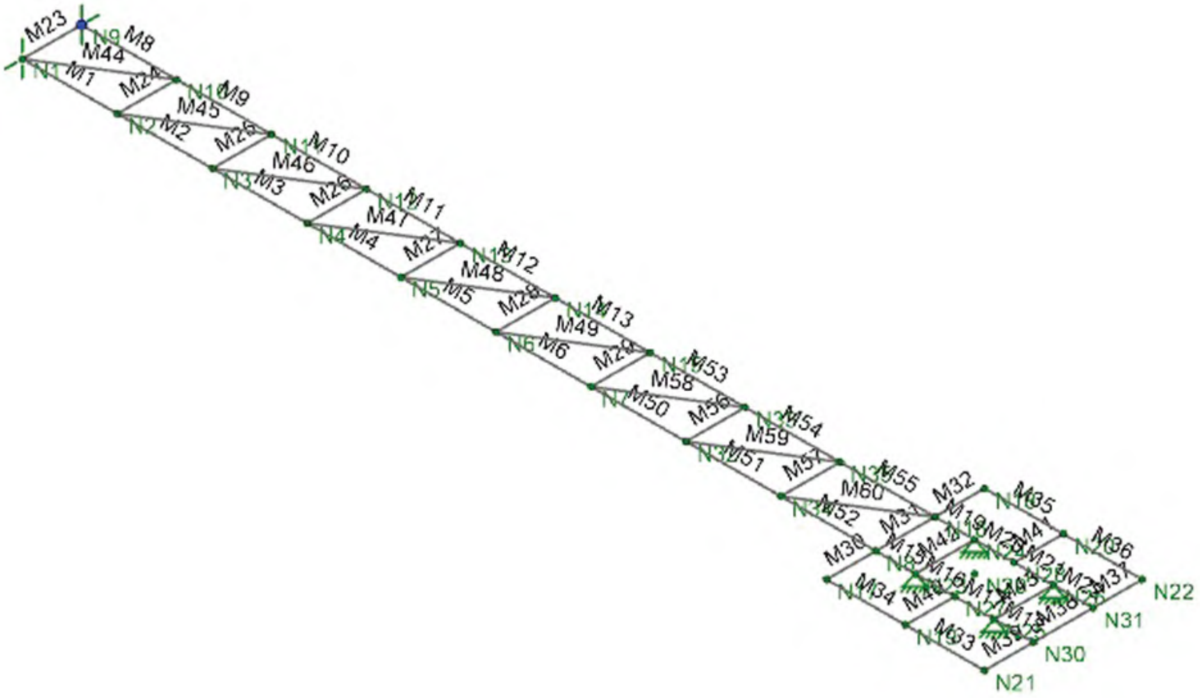

LEI	COTTAGE GROVE OR	SK-1
JF		Aug 22, 2022
2122680.000	Nodes and Member Labels	22-008 COTTAGE GROVE Walk…

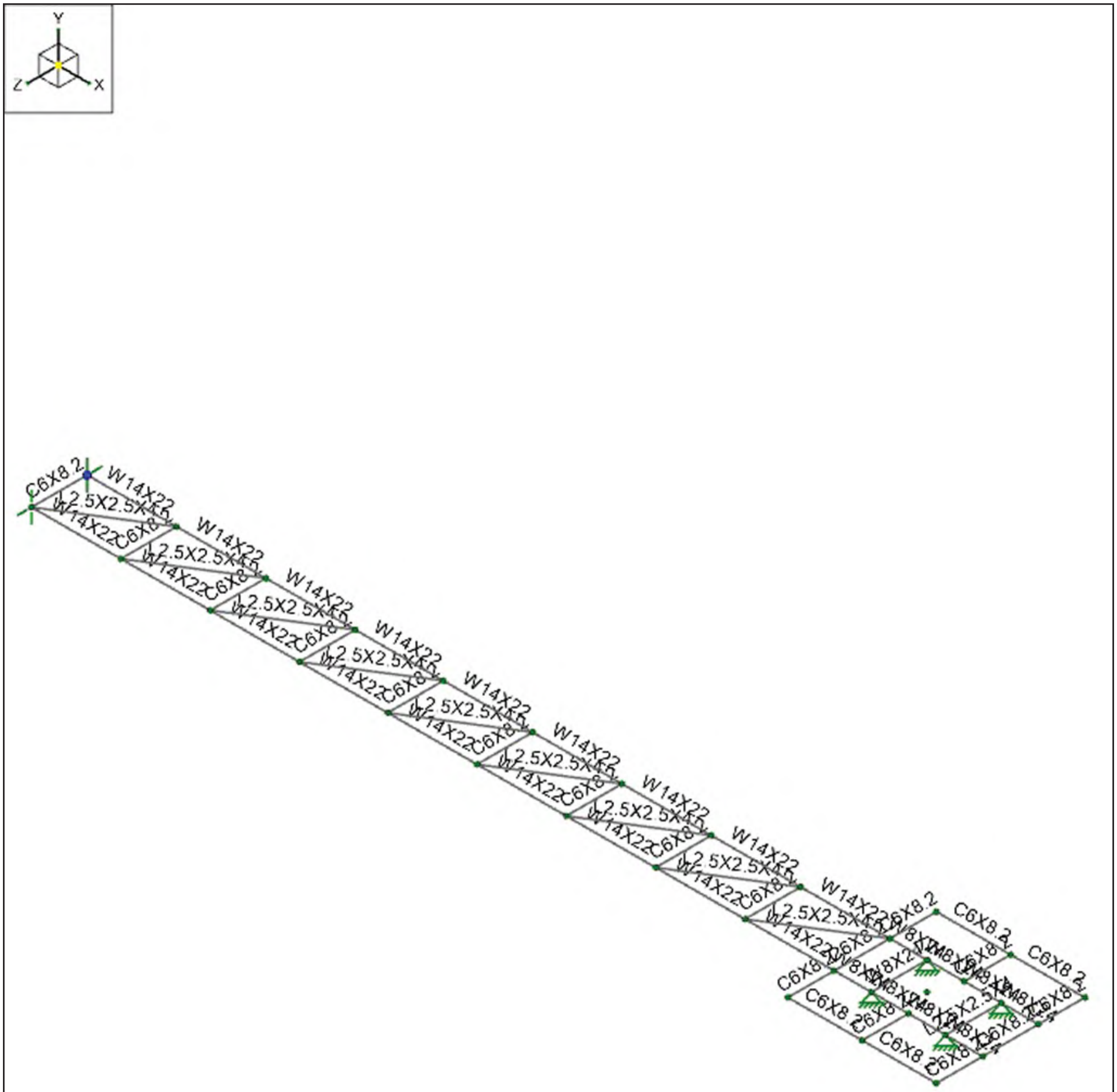

LEI	COTTAGE GROVE OR	SK-2
JF		Aug 22, 2022
2122680.000	Member Shapes	22-008 COTTAGE GROVE Walk…

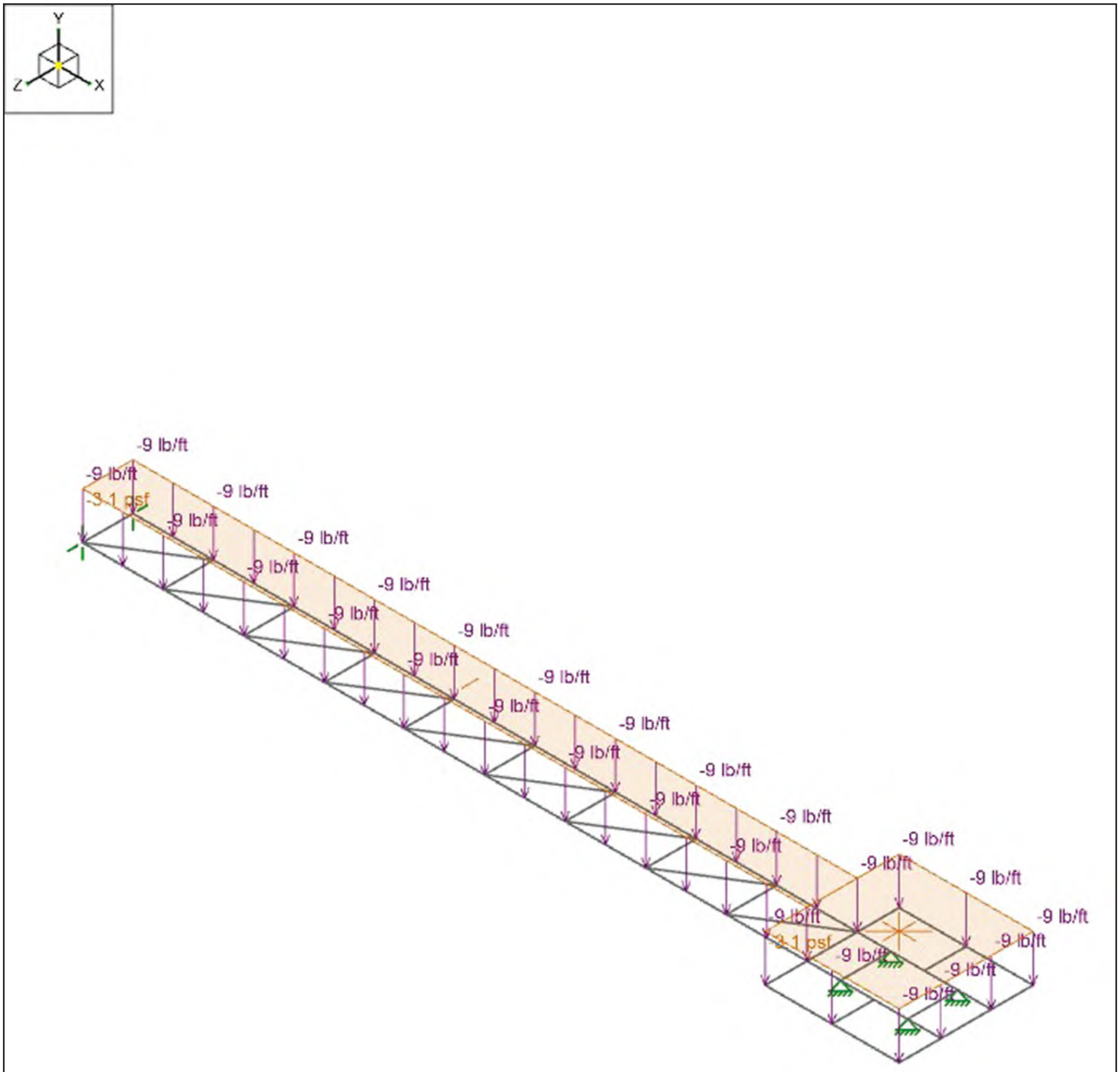

Loads: BLC 1, DL

LEI	COTTAGE GROVE OR	SK-3
JF		Aug 22, 2022
2122680.000	BLC 1 - Dead Load	22-008 COTTAGE GROVE Walk…

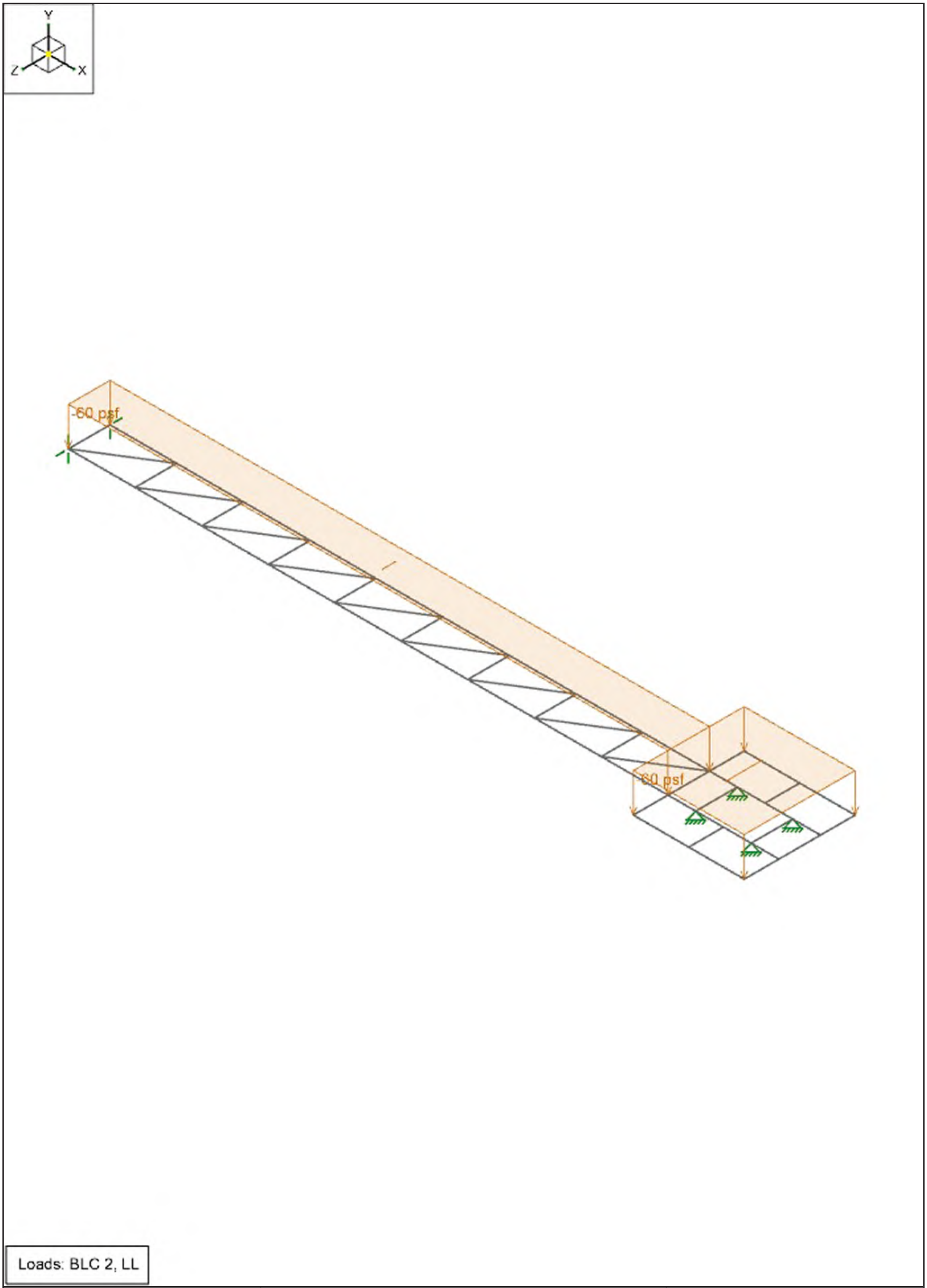

LEI	COTTAGE GROVE OR	SK-4
JF		Aug 22, 2022
2122680.000	BLC 2 - Live Load	22-008 COTTAGE GROVE Walk…

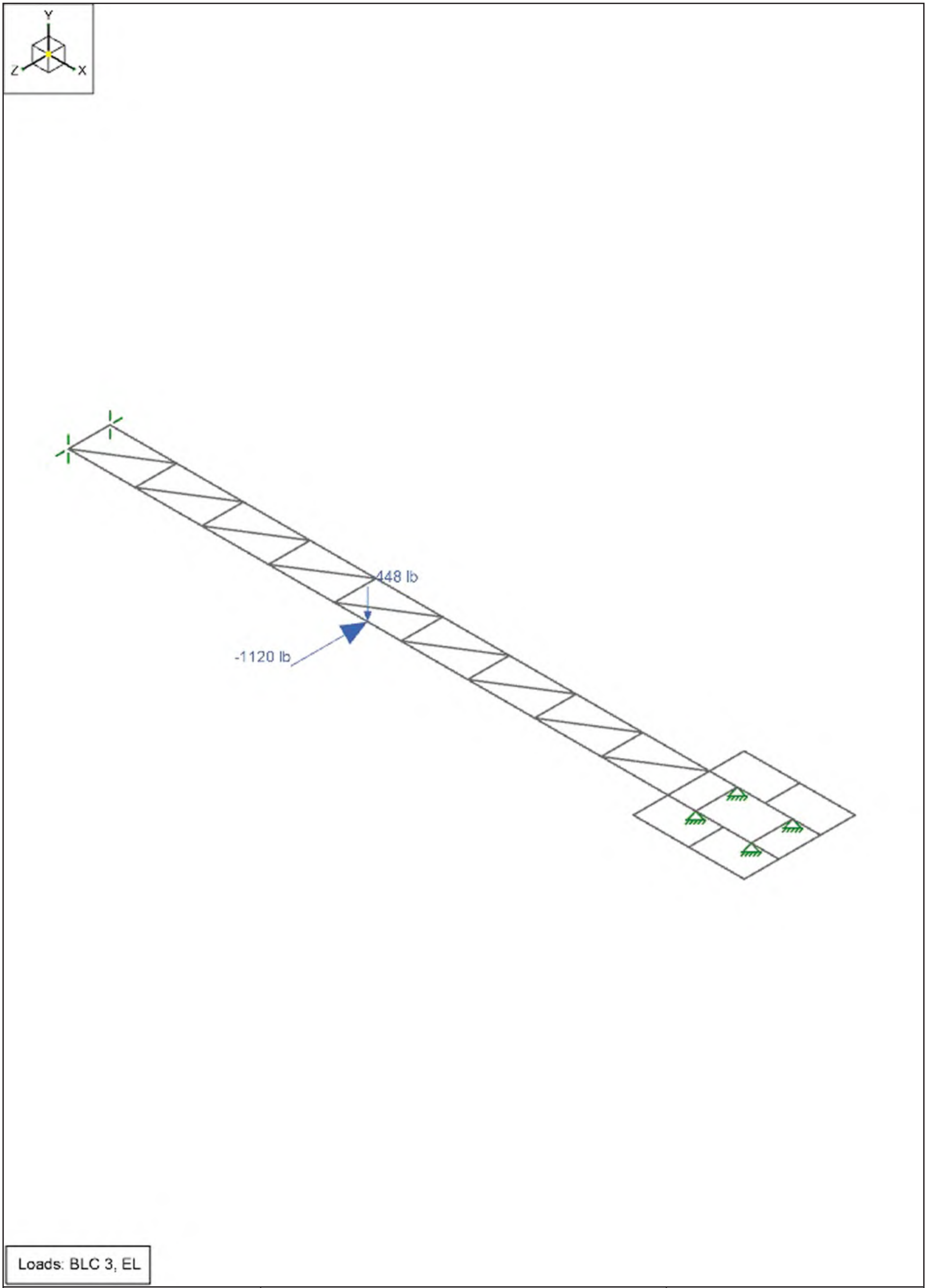

LEI	COTTAGE GROVE OR	SK-5
JF		Aug 22, 2022
2122680.000	BLC 3 - Earthquake Load	22-008 COTTAGE GROVE Walk…

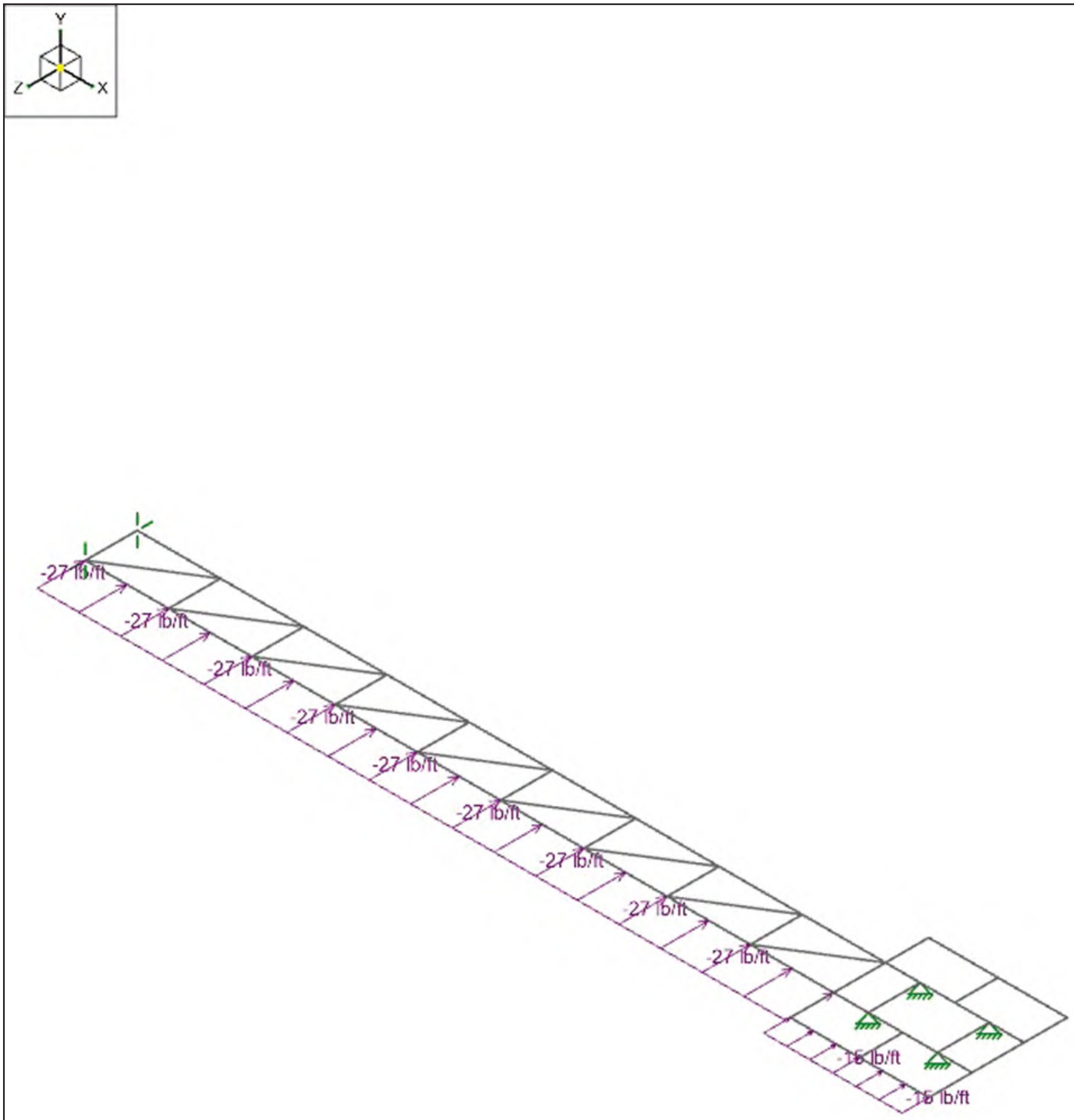

Loads: BLC 4, WL

LEI	COTTAGE GROVE OR	SK-6
JF		Aug 22, 2022
2122680.000	BLC 4 - Wind Load	22-008 COTTAGE GROVE Walk…

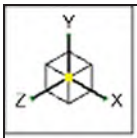

Code Check
(Env)

⬛ No Calc
🟥 > 1.0
🟪 .90-1.0
🟩 .75-.90
🟦 .50-.75
🟦 0.-.50

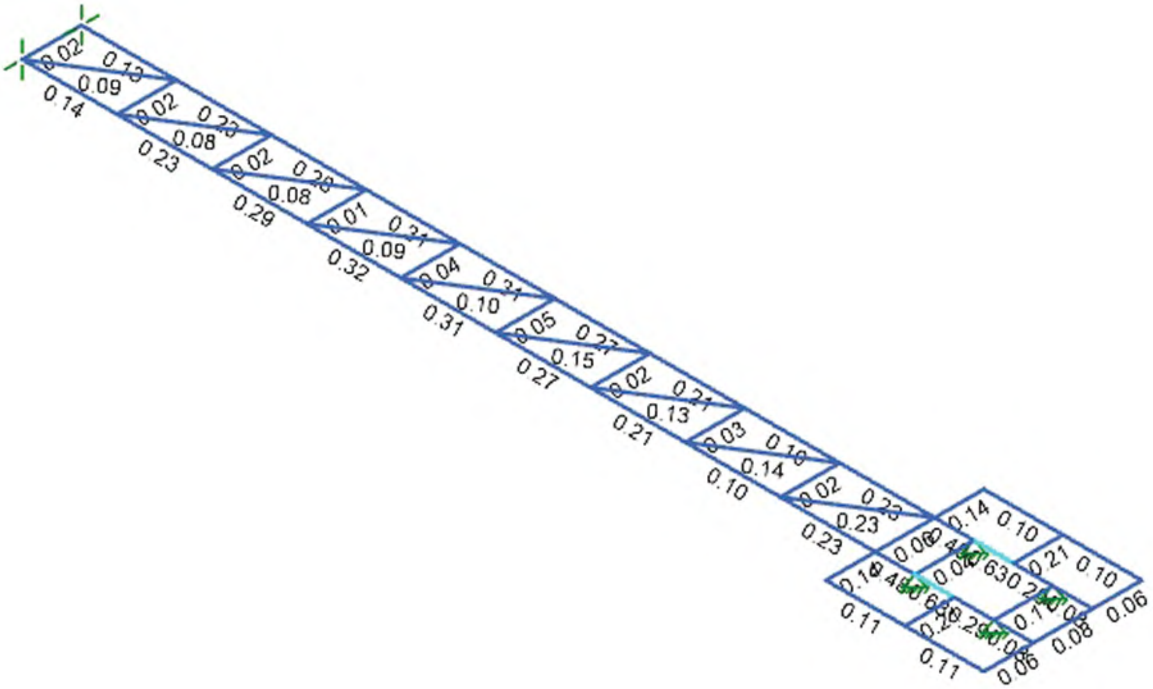

Member Code Checks Displayed (Enveloped)
Envelope Only Solution

LEI	COTTAGE GROVE OR	SK-7
JF		Aug 22, 2022
2122680.000	Envelope Member Unity	22-008 COTTAGE GROVE Walk…

Hot Rolled Steel Properties

	Label	E [psi]	G [psi]	Nu	Therm. Coeff. [1e^{5}°F^{-1}]	Density [lb/ft^{3}]	Yield [psi]	Ry	Fu [psi]	Rt
1	A992	2.9e+7	1.115e+7	0.3	0.65	490	50000	1.1	65000	1.1
2	A36 Gr.36	2.9e+7	1.115e+7	0.3	0.65	490	36000	1.5	58000	1.2
3	A572 Gr.50	2.9e+7	1.115e+7	0.3	0.65	490	50000	1.1	65000	1.1
4	A500 Gr.B RND	2.9e+7	1.115e+7	0.3	0.65	527	42000	1.4	58000	1.3
5	A500 Gr.B Rect	2.9e+7	1.115e+7	0.3	0.65	527	46000	1.4	58000	1.3
6	A53 Gr.B	2.9e+7	1.115e+7	0.3	0.65	490	35000	1.6	60000	1.2
7	A1085	2.9e+7	1.115e+7	0.3	0.65	490	50000	1.4	65000	1.3

Hot Rolled Steel Section Sets

	Label	Shape	Type	Design List	Material	Design Rule	Area [in^{2}]	Iyy [in^{4}]	Izz [in^{4}]	J [in^{4}]
1	Bridge Beam	W14X22	Beam	Wide Flange	A992	Typical	6.49	7	199	0.208
2	Platform Channel	C6X8.2	Beam	Channel	A36 Gr.36	Typical	2.39	0.687	13.1	0.074
3	Bridge Channel	C6X8.2	HBrace	Channel	A36 Gr.36	Typical	2.39	0.687	13.1	0.074
4	Diagonal	L2.5X2.5X4	HBrace	Single Angle	A36 Gr.36	Typical	1.19	0.692	0.692	0.026
5	Platform Beam	W8X24	Beam	Wide Flange	A992	Typical	7.08	18.3	82.7	0.346

Node Coordinates

	Label	X [ft]	Y [ft]	Z [ft]	Detach From Diaphragm
1	N1	0	0	1.5	
2	N2	4.8125	0	1.5	
3	N3	9.625	0	1.5	
4	N4	14.4375	0	1.5	
5	N5	19.1875	0	1.5	
6	N6	24	0	1.5	
7	N7	28.8125	0	1.5	
8	N8	43.25	0	1.5	
9	N9	0	0	-1.5	
10	N10	4.8125	0	-1.5	
11	N11	9.625	0	-1.5	
12	N12	14.4375	0	-1.5	
13	N13	19.1875	0	-1.5	
14	N14	24	0	-1.5	
15	N15	28.8125	0	-1.5	
16	N16	43.25	0	-1.5	
17	N17	43.25	0	4	
18	N18	43.25	0	-4	
19	N19	47.25	0	4	
20	N20	47.25	0	-4	
21	N21	51.25	0	4	
22	N22	51.25	0	-4	
23	N23	45.25	0	1.5	
24	N24	45.25	0	-1.5	
25	N25	49.25	0	1.5	
26	N26	49.25	0	-1.5	
27	N27	47.25	0	1.5	
28	N28	47.25	0	-1.5	
29	N29	46.75	0	0	
30	N30	51.25	0	1.5	
31	N31	51.25	0	-1.5	
32	N32	33.625	0	1.5	
33	N33	33.625	0	-1.5	
34	N34	38.4375	0	1.5	
35	N35	38.4375	0	-1.5	

Node Boundary Conditions

	Node Label	X [lb/in]	Y [lb/in]	Z [lb/in]
1	N23	Reaction	Reaction	Reaction
2	N24	Reaction	Reaction	Reaction
3	N26	Reaction	Reaction	Reaction
4	N25	Reaction	Reaction	Reaction
5	N1		Reaction	Reaction
6	N9		Reaction	Reaction

Nodal Loads and Enforced Displacements

No Data to Print...

Member Point Loads (BLC 3 : EL)

	Member Label	Direction	Magnitude [lb, lb-ft]	Location [(ft, %)]
1	M5	Z	-1120	2.4
2	M5	Y	-448	2.4

Member Distributed Loads (BLC 1 : DL)

	Member Label	Direction	Start Magnitude [lb/ft, F, psf, lb-ft/ft]	End Magnitude [lb/ft, F, psf, lb-ft/ft]	Start Location [(ft, %)]	End Location [(ft, %)]
1	M1	Y	-9	-9	0	%100
2	M2	Y	-9	-9	0	%100
3	M3	Y	-9	-9	0	%100
4	M4	Y	-9	-9	0	%100
5	M5	Y	-9	-9	0	%100
6	M6	Y	-9	-9	0	%100
7	M13	Y	-9	-9	0	%100
8	M12	Y	-9	-9	0	%100
9	M11	Y	-9	-9	0	%100
10	M10	Y	-9	-9	0	%100
11	M9	Y	-9	-9	0	%100
12	M8	Y	-9	-9	0	%100
13	M30	Y	-9	-9	0	%100
14	M32	Y	-9	-9	0	%100
15	M35	Y	-9	-9	0	%100
16	M36	Y	-9	-9	0	%100
17	M37	Y	-9	-9	0	%100
18	M38	Y	-9	-9	0	%100
19	M39	Y	-9	-9	0	%100
20	M33	Y	-9	-9	0	%100
21	M34	Y	-9	-9	0	%100
22	M50	Y	-9	-9	0	%100
23	M53	Y	-9	-9	0	%100
24	M54	Y	-9	-9	0	%100
25	M51	Y	-9	-9	0	%100
26	M52	Y	-9	-9	0	%100
27	M55	Y	-9	-9	0	%100

Member Distributed Loads (BLC 4 : WL)

	Member Label	Direction	Start Magnitude [lb/ft, F, psf, lb-ft/ft]	End Magnitude [lb/ft, F, psf, lb-ft/ft]	Start Location [(ft, %)]	End Location [(ft, %)]
1	M1	Z	-27	-27	0	%100
2	M2	Z	-27	-27	0	%100
3	M3	Z	-27	-27	0	%100
4	M4	Z	-27	-27	0	%100
5	M5	Z	-27	-27	0	%100
6	M6	Z	-27	-27	0	%100
7	M34	Z	-15	-15	0	%100
8	M33	Z	-15	-15	0	%100

Member Distributed Loads (BLC 4 : WL) (Continued)

	Member Label	Direction	Start Magnitude [lb/ft, F, psf, lb-ft/ft]	End Magnitude [lb/ft, F, psf, lb-ft/ft]	Start Location [(ft, %)]	End Location [(ft, %)]
9	M50	Z	-27	-27	0	%100
10	M51	Z	-27	-27	0	%100
11	M52	Z	-27	-27	0	%100

Member Distributed Loads (BLC 5 : BLC 1 Transient Area Loads)

	Member Label	Direction	Start Magnitude [lb/ft, F, psf, lb-ft/ft]	End Magnitude [lb/ft, F, psf, lb-ft/ft]	Start Location [(ft, %)]	End Location [(ft, %)]
1	M33	Y	-3.875	-3.875	1	3
2	M34	Y	-3.875	-3.875	1	3
3	M35	Y	-3.875	-3.875	1	3
4	M36	Y	-3.875	-3.875	1	3
5	M37	Y	-3.1	-3.1	0	2.5
6	M38	Y	-3.1	-3.1	0	3
7	M39	Y	-3.1	-3.1	0	2.5
8	M40	Y	-6.2	-6.2	0	2.5
9	M41	Y	-6.2	-6.2	0	2.5
10	M42	Y	-6.2	-6.2	0	3
11	M1	Y	-4.65	-4.65	4.441e-16	4.812
12	M2	Y	-4.65	-4.65	4.441e-16	4.812
13	M3	Y	-4.65	-4.65	0.0007324	4.81
14	M4	Y	-4.656	-4.656	0	4.75
15	M5	Y	-4.65	-4.65	0.002	4.812
16	M6	Y	-4.65	-4.65	4.441e-16	4.812
17	M8	Y	-4.65	-4.65	4.441e-16	4.812
18	M9	Y	-4.65	-4.65	4.441e-16	4.812
19	M10	Y	-4.65	-4.65	0.0007324	4.81
20	M11	Y	-4.656	-4.656	0	4.75
21	M12	Y	-4.65	-4.65	0.002	4.812
22	M13	Y	-4.65	-4.65	4.441e-16	4.812
23	M50	Y	-4.65	-4.65	4.441e-16	4.812
24	M51	Y	-4.65	-4.65	4.441e-16	4.812
25	M52	Y	-4.65	-4.65	4.441e-16	4.812
26	M53	Y	-4.65	-4.65	4.441e-16	4.812
27	M54	Y	-4.65	-4.65	4.441e-16	4.812
28	M55	Y	-4.65	-4.65	4.441e-16	4.812
29	M15	Y	-3.875	-3.875	1	2
30	M16	Y	-4.262	-4.262	0	2
31	M17	Y	-6.587	-6.587	1.665e-16	2
32	M18	Y	-8.525	-8.525	1.11e-16	1
33	M19	Y	-3.875	-3.875	1	2
34	M20	Y	-4.262	-4.262	0	2
35	M21	Y	-6.587	-6.587	1.665e-16	2
36	M22	Y	-8.525	-8.525	0	1
37	M30	Y	-3.1	-3.1	0	2.5
38	M31	Y	-3.1	-3.1	0	3
39	M32	Y	-3.1	-3.1	0	2.5

Member Distributed Loads (BLC 6 : BLC 2 Transient Area Loads)

	Member Label	Direction	Start Magnitude [lb/ft, F, psf, lb-ft/ft]	End Magnitude [lb/ft, F, psf, lb-ft/ft]	Start Location [(ft, %)]	End Location [(ft, %)]
1	M1	Y	-90	-90	4.441e-16	4.812
2	M2	Y	-90	-90	4.441e-16	4.812
3	M3	Y	-90	-90	0.0007324	4.81
4	M4	Y	-90.111	-90.111	0	4.75
5	M5	Y	-90	-90	0.002	4.812
6	M6	Y	-90	-90	4.441e-16	4.812
7	M8	Y	-90	-90	4.441e-16	4.812
8	M9	Y	-90	-90	4.441e-16	4.812
9	M10	Y	-90	-90	0.0007324	4.81
10	M11	Y	-90.111	-90.111	0	4.75

Member Distributed Loads (BLC 6 : BLC 2 Transient Area Loads) (Continued)

	Member Label	Direction	Start Magnitude [lb/ft, F, psf, lb-ft/ft]	End Magnitude [lb/ft, F, psf, lb-ft/ft]	Start Location [(ft, %)]	End Location [(ft, %)]
11	M12	Y	-90	-90	0.002	4.812
12	M13	Y	-90	-90	4.441e-16	4.812
13	M50	Y	-90	-90	4.441e-16	4.812
14	M51	Y	-90	-90	4.441e-16	4.812
15	M52	Y	-90	-90	4.441e-16	4.812
16	M53	Y	-90	-90	4.441e-16	4.812
17	M54	Y	-90	-90	4.441e-16	4.812
18	M55	Y	-90	-90	4.441e-16	4.812
19	M15	Y	-165	-165	1.665e-16	2
20	M16	Y	-165	-165	1.665e-16	2
21	M17	Y	-165	-165	1.665e-16	2
22	M18	Y	-165	-165	1.665e-16	2
23	M19	Y	-165	-165	1.665e-16	2
24	M20	Y	-165	-165	0	2
25	M21	Y	-165	-165	0	2
26	M22	Y	-165	-165	0	2
27	M33	Y	-75	-75	0	4
28	M34	Y	-75	-75	0	4
29	M35	Y	-75	-75	0	4
30	M36	Y	-75	-75	0	4

Member Area Loads (BLC 1 : DL)

	Node A	Node B	Node C	Node D	Direction	Load Direction	Magnitude [psf]
1	N1	N9	N16	N8	Y	A-B	-3.1
2	N17	N18	N22	N21	Y	Two Way	-3.1

Member Area Loads (BLC 2 : LL)

	Node A	Node B	Node C	Node D	Direction	Load Direction	Magnitude [psf]
1	N1	N9	N16	N8	Y	A-B	-60
2	N17	N18	N22	N21	Y	A-B	-60

Basic Load Cases

	BLC Description	Category	Y Gravity	Point	Distributed	Area(Member)
1	DL	DL	-1		27	2
2	LL	LL				2
3	EL	EL		2		
4	WL	WL			11	
5	BLC 1 Transient Area Loads	None			39	
6	BLC 2 Transient Area Loads	None			30	

Load Combinations

	Description	Solve	P-Delta	BLC	Factor	BLC	Factor	BLC	Factor
1	Allowable Cases								
2	(1) DL	Yes	Y	DL	1				
3	(2) DL + LL	Yes	Y	DL	1	LL	1		
4	(5) DL + 0.6 WL	Yes	Y	DL	1	WL	0.6		
5	(6) DL + 0.75 LL + (.75 * .6) WL	Yes	Y	DL	1	LL	0.75	WL	0.45
6	(7) .6 DL + .6 WL	Yes	Y	DL	0.6	WL	0.6		
7	(8) DL + .7 EL	Yes	Y	DL	1	EL	0.7		
8	(9) DL + .75 LL + .75(.7 EL)	Yes	Y	DL	1	EL	0.525	LL	0.75
9	(10) .6 DL - .7 EL	Yes	Y	DL	0.6	EL	-0.7		
10	Ultimate								
11	(1) 1.4 DL		Y	DL	1.4				
12	(2) 1.2 DL + 1.6 LL		Y	DL	1.2	LL	1.6		
13	(4) 1.2 DL+ WL + LL	Yes	Y	DL	1.2	WL	1	LL	1

Load Combinations (Continued)

	Description	Solve	P-Delta	BLC	Factor	BLC	Factor	BLC	Factor
14	(5) .9 DL + WL	Yes	Y	DL	0.9	WL	1	LL	1
15	(6) 1.2 DL+ EL*1.25 Overstrength + LL		Y	DL	1.2	EL	1.25	LL	1
16	(7) .9 DL + EL *1.25 OverStrength		Y	DL	0.9	EL	1.25		
17	Individual								
18	LL		Y	LL	1				
19	EL		Y	EL	1				
20	WL		Y	WL	1				

Load Combination Design

	Description	Service	Hot Rolled	Cold Formed	Wood	Concrete	Masonry	Aluminum	Stainless	Connection
1	Allowable Cases		Yes	Yes	Yes	Yes	Yes	Yes	Yes	Yes
2	(1) DL		Yes	Yes	Yes	Yes	Yes	Yes	Yes	Yes
3	(2) DL + LL		Yes	Yes	Yes	Yes	Yes	Yes	Yes	Yes
4	(5) DL + 0.6 WL		Yes	Yes	Yes	Yes	Yes	Yes	Yes	Yes
5	(6) DL + 0.75 LL + (.75 * .6) WL		Yes	Yes	Yes	Yes	Yes	Yes	Yes	Yes
6	(7) .6 DL + .6 WL		Yes	Yes	Yes	Yes	Yes	Yes	Yes	Yes
7	(8) DL + .7 EL		Yes	Yes	Yes	Yes	Yes	Yes	Yes	Yes
8	(9) DL + .75 LL + .75(.7 EL)		Yes	Yes	Yes	Yes	Yes	Yes	Yes	Yes
9	(10) .6 DL - .7 EL		Yes	Yes	Yes	Yes	Yes	Yes	Yes	Yes
10	Ultimate		Yes	Yes	Yes	Yes	Yes	Yes	Yes	Yes
11	(1) 1.4 DL		Yes	Yes	Yes	Yes	Yes	Yes	Yes	Yes
12	(2) 1.2 DL + 1.6 LL		Yes	Yes	Yes	Yes	Yes	Yes	Yes	Yes
13	(4) 1.2 DL+ WL + LL		Yes	Yes	Yes	Yes	Yes	Yes	Yes	Yes
14	(5) .9 DL + WL		Yes	Yes	Yes	Yes	Yes	Yes	Yes	Yes
15	(6) 1.2 DL+ EL*1.25 Overstrength + LL		Yes	Yes	Yes	Yes	Yes	Yes	Yes	Yes
16	(7) .9 DL + EL *1.25 OverStrength		Yes	Yes	Yes	Yes	Yes	Yes	Yes	Yes
17	Individual		Yes	Yes	Yes	Yes	Yes	Yes	Yes	Yes
18	LL		Yes	Yes	Yes	Yes	Yes	Yes	Yes	Yes
19	EL		Yes	Yes	Yes	Yes	Yes	Yes	Yes	Yes
20	WL		Yes	Yes	Yes	Yes	Yes	Yes	Yes	Yes

Envelope Node Reactions

	Node Label		X [lb]	LC	Y [lb]	LC	Z [lb]	LC	MX [lb-ft]	LC	MY [lb-ft]	LC	MZ [lb-ft]	LC
1	N23	max	1813.513	13	11053.014	13	424.265	13	0	14	0	14	0	14
2		min	-1751.781	9	1303.666	9	-279.048	9	0	2	0	2	0	2
3	N24	max	1751.414	9	10999.08	13	426.698	14	0	14	0	14	0	14
4		min	-1806.502	13	1808.128	9	-299.543	9	0	2	0	2	0	2
5	N26	max	3.83	9	-839.978	9	41.359	9	0	14	0	14	0	14
6		min	-6.547	14	-4943.992	13	-56.385	13	0	2	0	2	0	2
7	N25	max	3.404	7	-528.481	9	39.672	9	0	14	0	14	0	14
8		min	-3.462	9	-4958.591	13	-34.822	7	0	2	0	2	0	2
9	N1	max	0	14	2617.355	13	471.983	14	0	14	0	14	0	14
10		min	0	2	329.819	9	-282.711	9	0	2	0	2	0	2
11	N9	max	0	14	2554.811	13	8.536	13	0	14	0	14	0	14
12		min	0	2	452.017	6	-3.73	9	0	2	0	2	0	2
13	Totals:	max	0	3	17321.676	13	1287.75	14						
14		min	0	14	2534.738	9	-784	9						

Envelope Node Displacements

	Node Label		X [in]	LC	Y [in]	LC	Z [in]	LC	X Rotation [rad]	LC	Y Rotation [rad]	LC	Z Rotation [rad]	LC
1	N1	max	0.002	13	0	9	0	9	1.054e-5	7	2.212e-4	14	-1.21e-3	9
2		min	-0.002	9	0	13	0	14	-2.151e-5	9	-1.589e-4	9	-1.076e-2	13
3	N2	max	0.002	7	-0.068	9	0.009	9	8.879e-4	7	1.575e-4	13	-1.094e-3	9
4		min	-0.002	9	-0.608	13	-0.01	13	-8.437e-4	9	-1.485e-4	9	-9.899e-3	13
5	N3	max	0.001	7	-0.124	9	0.017	9	1.684e-3	7	1.539e-4	7	-8.041e-4	9
6		min	-0.001	9	-1.123	13	-0.019	13	-1.598e-3	9	-1.492e-4	9	-7.654e-3	13

Envelope Node Displacements (Continued)

	Node Label		X [in]	LC	Y [in]	LC	Z [in]	LC	X Rotation [rad]	LC	Y Rotation [rad]	LC	Z Rotation [rad]	LC
7	N4	max	0.001	7	-0.16	9	0.025	9	2.296e-3	7	8.331e-5	13	-4.3e-4	9
8		min	-0.001	9	-1.479	13	-0.025	7	-2.191e-3	9	-4.682e-5	9	-4.507e-3	13
9	N5	max	0	9	-0.173	9	0.031	9	2.61e-3	7	3.751e-4	7	-6.616e-5	9
10		min	0	7	-1.637	13	-0.031	7	-2.509e-3	9	-3.691e-4	9	-9.945e-4	13
11	N6	max	0.001	9	-0.168	9	0.03	9	2.533e-3	7	3.819e-4	9	2.496e-3	13
12		min	-0.001	7	-1.592	13	-0.03	7	-2.457e-3	9	-3.764e-4	7	2.297e-4	9
13	N7	max	0.001	9	-0.146	9	0.024	9	2.065e-3	7	5.037e-5	9	5.435e-3	13
14		min	-0.001	7	-1.357	13	-0.024	13	-2.023e-3	9	-5.872e-5	14	5.29e-4	9
15	N8	max	0	9	-0.013	9	0.003	9	1.908e-4	8	1.526e-4	9	6.138e-3	13
16		min	0	7	-0.115	13	-0.005	14	-9.932e-5	9	-2.27e-4	14	7.041e-4	9
17	N9	max	0.002	9	0	6	0	9	1.685e-5	7	1.705e-4	13	-1.735e-3	9
18		min	-0.002	13	0	13	0	13	-7.171e-6	9	-1.465e-4	9	-1.065e-2	13
19	N10	max	0.002	9	-0.098	9	0.009	9	8.846e-4	7	1.531e-4	14	-1.596e-3	9
20		min	-0.002	13	-0.602	13	-0.01	13	-8.242e-4	9	-1.461e-4	9	-9.807e-3	13
21	N11	max	0.002	9	-0.181	9	0.017	9	1.679e-3	7	1.239e-4	7	-1.233e-3	9
22		min	-0.002	7	-1.113	13	-0.019	13	-1.583e-3	9	-1.288e-4	9	-7.596e-3	13
23	N12	max	0.002	9	-0.238	9	0.024	9	2.289e-3	7	1.165e-4	7	-7.266e-4	9
24		min	-0.002	7	-1.466	13	-0.025	7	-2.178e-3	9	-1.224e-4	9	-4.492e-3	13
25	N13	max	0.001	9	-0.264	9	0.03	9	2.615e-3	7	4.411e-5	7	-1.64e-4	9
26		min	-0.001	7	-1.625	13	-0.031	7	-2.508e-3	9	-5.011e-5	9	-1.017e-3	13
27	N14	max	0	9	-0.257	9	0.03	9	2.534e-3	7	4.975e-5	9	2.447e-3	13
28		min	-0.001	14	-1.581	13	-0.03	7	-2.449e-3	9	-5.531e-5	7	3.962e-4	9
29	N15	max	0	7	-0.219	9	0.024	9	2.084e-3	7	1.122e-4	9	5.376e-3	13
30		min	0	9	-1.35	13	-0.024	13	-2.029e-3	9	-1.163e-4	7	8.708e-4	9
31	N16	max	0	7	-0.019	9	0.003	9	1.14e-4	7	1.591e-4	9	6.124e-3	13
32		min	0	9	-0.114	13	-0.005	14	-1.48e-4	9	-2.152e-4	14	9.964e-4	9
33	N17	max	0.001	9	-0.011	9	0.003	9	2.662e-4	8	5.023e-5	13	1.201e-3	13
34		min	-0.002	14	-0.122	13	-0.005	14	-6.563e-5	9	-1.658e-5	7	8.031e-5	9
35	N18	max	0.002	14	-0.021	6	0.003	9	9.568e-5	7	1.869e-5	9	1.186e-3	13
36		min	-0.001	9	-0.121	13	-0.005	14	-2.588e-4	3	-3.069e-5	13	2.38e-4	6
37	N19	max	0.001	9	-0.008	9	0	7	3.246e-3	13	4.841e-5	9	8.465e-4	13
38		min	-0.002	14	-0.068	13	0	9	3.672e-4	9	-6.5e-5	14	5.846e-5	9
39	N20	max	0.002	14	-0.011	6	0.001	13	-5.203e-4	6	5.08e-5	9	8.37e-4	13
40		min	-0.001	9	-0.067	13	0	9	-3.235e-3	13	-6.608e-5	14	1.491e-4	6
41	N21	max	0.001	9	-0.006	9	0	9	5.711e-4	13	2.223e-5	9	5.238e-4	13
42		min	-0.002	14	-0.04	13	-0.001	14	7.036e-5	6	-1.046e-4	13	4.036e-5	9
43	N22	max	0.002	14	-0.006	9	0	9	-7.188e-5	6	2.324e-5	9	5.192e-4	13
44		min	-0.001	9	-0.04	13	-0.001	13	-5.737e-4	13	-2.733e-5	14	6.575e-5	6
45	N23	max	0	9	0	9	0	9	1.304e-4	13	4.799e-5	9	2.843e-3	13
46		min	0	13	0	13	0	13	1.087e-5	9	-6.271e-5	14	3.362e-4	9
47	N24	max	0	13	0	9	0	9	-1.952e-5	6	5.137e-5	9	2.837e-3	13
48		min	0	9	0	13	0	14	-1.294e-4	13	-7.708e-5	13	4.592e-4	9
49	N25	max	0	9	0	13	0	7	1.26e-3	13	1.405e-5	14	-1.203e-4	9
50		min	0	7	0	9	0	9	1.499e-4	9	-1.535e-5	9	-9.376e-4	13
51	N26	max	0	14	0	13	0	13	-1.993e-4	6	3.675e-5	13	-1.511e-4	9
52		min	0	9	0	9	0	9	-1.263e-3	13	-1.378e-5	9	-9.367e-4	13
53	N27	max	0	9	0.022	13	0	14	2.242e-3	13	9.951e-6	13	1.117e-5	13
54		min	0	14	0.003	9	0	9	2.568e-4	9	-6.541e-6	9	1.241e-6	9
55	N28	max	0	14	0.022	13	0.001	13	-3.607e-4	6	8.14e-6	14	1.114e-5	13
56		min	0	9	0.004	9	0	9	-2.236e-3	13	-7.607e-6	9	1.805e-6	9
57	N29	max	0	14	0	14	0	14	0	14	0	14	0	14
58		min	0	2	0	2	0	2	0	2	0	2	0	2
59	N30	max	0	9	-0.003	9	0	9	4.569e-4	13	2.477e-5	13	-1.319e-4	9
60		min	0	7	-0.024	13	-0.001	14	5.541e-5	9	-4.347e-6	9	-9.774e-4	13
61	N31	max	0	14	-0.004	9	0	9	-6.437e-5	6	1.422e-5	14	-1.57e-4	9
62		min	0	9	-0.024	13	-0.001	13	-4.577e-4	13	-4.89e-6	9	-9.771e-4	13
63	N32	max	0.001	9	-0.108	9	0.017	9	1.407e-3	7	1.407e-4	9	7.34e-3	13
64		min	-0.001	7	-0.979	13	-0.019	14	-1.397e-3	9	-1.382e-4	7	7.647e-4	9
65	N33	max	0	7	-0.159	9	0.017	9	1.43e-3	7	1.173e-4	9	7.29e-3	13
66		min	0	9	-0.975	13	-0.019	14	-1.4e-3	9	-1.194e-4	7	1.184e-3	9

Envelope Node Displacements (Continued)

	Node Label		X [in]	LC	Y [in]	LC	Z [in]	LC	X Rotation [rad]	LC	Y Rotation [rad]	LC	Z Rotation [rad]	LC
67	N34	max	0.001	9	-0.06	9	0.01	9	7.116e-4	7	9.883e-5	9	7.733e-3	13
68		min	-0.001	7	-0.531	13	-0.012	14	-7.2e-4	9	-9.986e-5	7	8.507e-4	9
69	N35	max	0.001	7	-0.086	9	0.01	9	7.382e-4	7	9.736e-5	9	7.701e-3	13
70		min	-0.001	9	-0.53	13	-0.012	14	-7.216e-4	9	-9.636e-5	7	1.255e-3	9

Envelope Member Section Stresses

	Member	Sec		Axial[psi]	LC	y Shear[psi]	LC	z Shear[psi]	LC	y-Top[psi]	LC	y-Bot[psi]	LC	z-Top[psi]	LC	z-Bot[psi]	LC
1	M1	1	max	105.13	13	818.592	13	17.973	14	9.334	9	2.981	7	2.759	9	109.621	13
2			min	-70.472	9	110.237	9	-0.384	9	-2.981	7	-9.334	9	-109.621	13	-2.759	9
3		2	max	105.13	13	767.855	13	8.276	14	1248.012	13	-175.55	9	117.11	14	9.306	3
4			min	-70.472	9	102.051	9	-0.384	9	175.55	9	-1248.012	13	-9.306	3	-117.11	14
5		3	max	105.13	13	717.118	13	0.275	7	2410.709	13	-328.947	9	176.323	14	10.806	3
6			min	-70.472	9	93.865	9	-1.446	13	328.947	9	-2410.709	13	-10.806	3	-176.323	14
7		4	max	105.13	13	666.381	13	0.275	7	3493.954	13	-469.524	9	68.038	14	17.162	9
8			min	-70.472	9	85.678	9	-11.143	13	469.524	9	-3493.954	13	-17.162	9	-68.038	14
9		5	max	105.13	13	615.644	13	0.275	7	4497.748	13	-597.282	9	15.036	7	209.53	13
10			min	-70.472	9	77.492	9	-20.84	13	597.282	9	-4497.748	13	-209.53	13	-15.036	7
11	M2	1	max	175.695	13	605.753	13	19.44	14	4492.976	13	-605.164	9	52.219	8	198.398	14
12			min	-141.173	9	72.136	9	-1.599	8	605.164	9	-4492.976	13	-198.398	14	-52.219	8
13		2	max	175.695	13	555.016	13	9.744	14	5401.828	13	-711.715	9	55.621	13	6.527	9
14			min	-141.173	9	63.949	9	-1.599	8	711.715	9	-5401.828	13	-6.527	9	-55.621	13
15		3	max	175.695	13	504.279	13	0.566	6	6231.229	13	-805.447	9	138.212	14	3.011	8
16			min	-141.173	9	55.763	9	-1.599	8	805.447	9	-6231.229	13	-3.011	8	-138.212	14
17		4	max	175.695	13	453.542	13	0.422	9	6981.179	13	-886.358	9	55.27	14	30.627	8
18			min	-141.173	9	47.576	9	-9.778	13	886.358	9	-6981.179	13	-30.627	8	-55.27	14
19		5	max	175.695	13	402.805	13	0.422	9	7651.676	13	-954.45	9	15.362	9	199.806	13
20			min	-141.173	9	39.39	9	-19.474	13	954.45	9	-7651.676	13	-199.806	13	-15.362	9
21	M3	1	max	214.564	13	392.475	13	18.116	14	7640.175	13	-960.039	9	56.219	3	130.795	14
22			min	-209.368	9	33.082	9	-4.601	9	960.039	9	-7640.175	13	-130.795	14	-56.219	3
23		2	max	214.564	13	341.76	13	8.42	14	8215.079	13	-1005.435	9	101.087	13	23.394	9
24			min	-209.368	9	24.896	9	-4.601	9	1005.435	9	-8215.079	13	-23.394	9	-101.087	13
25		3	max	214.564	13	291.023	13	3.722	7	8710.532	13	-1038.011	9	160.074	14	102.864	9
26			min	-209.368	9	16.709	9	-4.601	9	1038.011	9	-8710.532	13	-102.864	9	-160.074	14
27		4	max	214.564	13	240.286	13	3.722	7	9126.534	13	-1057.767	9	166.137	7	182.334	9
28			min	-209.368	9	8.523	9	-11.141	13	1057.767	9	-9126.534	13	-182.334	9	-166.137	7
29		5	max	214.564	13	189.615	13	3.722	7	9463.084	13	-1064.703	9	230.423	7	261.804	9
30			min	-209.368	9	0.338	9	-20.838	13	1064.703	9	-9463.084	13	-261.804	9	-230.423	7
31	M4	1	max	291.577	7	178.966	13	18.007	9	9447.716	13	-1069.846	9	321.096	7	286.101	9
32			min	-290.944	9	-7.148	9	-19.041	7	1069.846	9	-9447.716	13	-286.101	9	-321.096	7
33		2	max	291.577	7	128.843	13	18.007	9	9685.593	13	-1052.552	9	109.342	13	3.544	7
34			min	-290.944	9	-15.23	9	-19.041	7	1052.552	9	-9685.593	13	-3.544	7	-109.342	13
35		3	max	291.577	7	89.83	8	18.007	9	9846	13	-1022.768	9	327.92	9	328.185	7
36			min	-290.944	9	-23.311	9	-19.041	7	1022.768	9	-9846	13	-328.185	7	-327.92	9
37		4	max	291.577	7	50.891	8	18.007	9	9928.936	13	-980.492	9	634.931	9	652.825	7
38			min	-290.944	9	-31.393	9	-19.041	7	980.492	9	-9928.936	13	-652.825	7	-634.931	9
39		5	max	291.577	7	33.705	7	18.007	9	9934.403	13	-925.726	9	941.941	9	977.465	7
40			min	-290.944	9	-39.474	9	-21.193	13	925.726	9	-9934.403	13	-977.465	7	-941.941	9
41	M5	1	max	270.403	7	28.96	7	116.653	7	9917.765	13	-921.925	9	1278.938	9	1243.51	7
42			min	-269.9	9	-48.491	9	-117.665	9	921.925	9	-9917.765	13	-1243.51	7	-1278.938	9
43		2	max	270.403	7	15.319	7	116.653	7	9827.836	13	-839.584	9	771.491	7	753.538	9
44			min	-269.9	9	-82.796	13	-117.665	9	839.584	9	-9827.836	13	-753.538	9	-771.491	7
45		3	max	270.403	7	34.662	9	116.365	9	9658.456	13	-745.234	9	2765.492	7	2765.014	9
46			min	-269.9	9	-147.576	8	-117.377	7	745.234	9	-9658.456	13	-2765.014	9	-2765.492	7
47		4	max	270.403	7	26.476	9	116.365	9	9409.624	13	-793.103	9	737.994	7	754.989	9
48			min	-269.9	9	-186.993	8	-117.377	7	793.103	9	-9409.624	13	-754.989	9	-737.994	7
49		5	max	270.403	7	18.29	9	116.365	9	9081.34	13	-828.154	9	1255.035	9	1289.505	7
50			min	-269.9	9	-234.985	13	-117.377	7	828.154	9	-9081.34	13	-1289.505	7	-1255.035	9
51	M6	1	max	138.603	13	8.543	9	17.036	14	9066.119	13	-831.064	9	933.387	9	901.764	7
52			min	-129.788	9	-244.955	13	-17.379	9	831.064	9	-9066.119	13	-901.764	7	-933.387	9

Envelope Member Section Stresses (Continued)

	Member	Sec		Axial[psi]	LC	y Shear[psi]	LC	z Shear[psi]	LC	y-Top[psi]	LC	y-Bot[psi]	LC	z-Top[psi]	LC	z-Bot[psi]	LC
53		2	max	138.603	13	0.357	9	16.501	7	8642.806	13	-838.032	9	633.186	9	616.73	7
54			min	-129.788	9	-295.692	13	-17.379	9	838.032	9	-8642.806	13	-616.73	7	-633.186	9
55		3	max	138.603	13	-7.83	9	16.501	7	8140.041	13	-832.181	9	332.985	9	331.696	7
56			min	-129.788	9	-346.429	13	-17.379	9	832.181	9	-8140.041	13	-331.696	7	-332.985	9
57		4	max	138.603	13	-16.016	9	16.501	7	7557.825	13	-813.51	9	32.784	9	51.408	8
58			min	-129.788	9	-397.166	13	-17.379	9	813.51	9	-7557.825	13	-51.408	8	-32.784	9
59		5	max	138.603	13	-24.203	9	16.501	7	6896.157	13	-782.02	9	238.372	7	267.418	9
60			min	-129.788	9	-447.903	13	-21.915	13	782.02	9	-6896.157	13	-267.418	9	-238.372	7
61	M8	1	max	0.961	9	806.856	13	2.547	13	1.199	7	1.124	9	38.109	9	69.701	13
62			min	-1.862	13	133.944	9	-1.114	9	-1.124	9	-1.199	7	-69.701	13	-38.109	9
63		2	max	0.961	9	756.119	13	2.547	13	1224	13	-202.216	9	18.869	9	26.236	14
64			min	-1.862	13	125.758	9	-1.114	9	202.216	9	-1224	13	-26.236	14	-18.869	9
65		3	max	0.961	9	705.382	13	2.547	13	2368.318	13	-392.737	9	18.292	13	0.371	9
66			min	-1.862	13	117.571	9	-1.114	9	392.737	9	-2368.318	13	-0.371	9	-18.292	13
67		4	max	0.961	9	654.645	13	2.547	13	3433.185	13	-570.438	9	62.288	13	19.611	9
68			min	-1.862	13	109.385	9	-1.114	9	570.438	9	-3433.185	13	-19.611	9	-62.288	13
69		5	max	0.961	9	603.908	13	2.547	13	4418.601	13	-735.319	9	106.284	13	38.85	9
70			min	-1.862	13	101.199	9	-1.114	9	735.319	9	-4418.601	13	-38.85	9	-106.284	13
71	M9	1	max	71.415	9	596.681	13	2.678	8	4427.572	13	-727.705	9	35.044	9	77.758	8
72			min	-106.251	13	97.657	9	-1.518	9	727.705	9	-4427.572	13	-77.758	8	-35.044	9
73		2	max	71.415	9	545.944	13	2.678	8	5322.219	13	-874.221	9	12.046	6	31.496	8
74			min	-106.251	13	89.47	9	-1.518	9	874.221	9	-5322.219	13	-31.496	8	-12.046	6
75		3	max	71.415	9	495.207	13	2.678	8	6137.414	13	-1007.918	9	42.201	13	17.405	9
76			min	-106.251	13	81.284	9	-1.518	9	1007.918	9	-6137.414	13	-17.405	9	-42.201	13
77		4	max	71.415	9	444.47	13	2.678	8	6873.157	13	-1128.794	9	84.335	13	43.629	9
78			min	-106.251	13	73.097	9	-1.518	9	1128.794	9	-6873.157	13	-43.629	9	-84.335	13
79		5	max	71.415	9	393.733	13	2.678	8	7529.449	13	-1236.852	9	126.469	13	69.853	9
80			min	-106.251	13	64.911	9	-1.518	9	1236.852	9	-7529.449	13	-69.853	9	-126.469	13
81	M10	1	max	142.26	9	386.672	13	2.462	13	7543.42	13	-1231.412	9	6.987	6	61.384	3
82			min	-176.483	13	62.419	9	0.084	9	1231.412	9	-7543.42	13	-61.384	3	-6.987	6
83		2	max	142.26	9	335.957	13	2.462	13	8109.238	13	-1322.749	9	17.664	6	29.566	3
84			min	-176.483	13	54.234	9	0.084	9	1322.749	9	-8109.238	13	-29.566	3	-17.664	6
85		3	max	142.26	9	285.22	13	2.462	13	8595.604	13	-1401.266	9	48.772	13	6.391	9
86			min	-176.483	13	46.047	9	0.084	9	1401.266	9	-8595.604	13	-6.391	9	-48.772	13
87		4	max	142.26	9	234.483	13	2.462	13	9002.519	13	-1466.964	9	91.298	13	4.946	9
88			min	-176.483	13	37.861	9	0.084	9	1466.964	9	-9002.519	13	-4.946	9	-91.298	13
89		5	max	142.26	9	183.813	13	2.462	13	9329.982	13	-1519.843	9	133.824	13	3.501	9
90			min	-176.483	13	29.676	9	0.084	9	1519.843	9	-9329.982	13	-3.501	9	-133.824	13
91	M11	1	max	209.782	9	177.097	13	4.466	8	9346.482	13	-1516.301	9	37.589	9	97.015	8
92			min	-214.871	13	27.674	9	-3.261	9	1516.301	9	-9346.482	13	-97.015	8	-37.589	9
93		2	max	209.782	9	126.974	13	4.466	8	9581.47	13	-1552.829	9	22.968	6	34.974	3
94			min	-214.871	13	19.592	9	-3.261	9	1552.829	9	-9581.47	13	-34.974	3	-22.968	6
95		3	max	209.782	9	76.852	13	4.466	8	9738.988	13	-1576.866	9	73.635	7	73.598	9
96			min	-214.871	13	11.511	9	-3.261	9	1576.866	9	-9738.988	13	-73.598	9	-73.635	7
97		4	max	209.782	9	26.729	13	4.466	8	9819.035	13	-1588.412	9	147.081	7	129.191	9
98			min	-214.871	13	3.43	9	-3.261	9	1588.412	9	-9819.035	13	-129.191	9	-147.081	7
99		5	max	209.782	9	-1.714	7	4.466	8	9821.613	13	-1587.468	9	220.526	7	184.784	9
100			min	-214.871	13	-23.393	13	-3.261	9	1587.468	9	-9821.613	13	-184.784	9	-220.526	7
101	M12	1	max	294.935	9	-3.981	9	1.939	3	9837.721	13	-1588.109	9	69.698	7	103.482	9
102			min	-295.575	7	-30.198	13	0.092	9	1588.109	9	-9837.721	13	-103.482	9	-69.698	7
103		2	max	294.935	9	-12.165	9	1.939	3	9750.811	13	-1575.469	9	84.774	7	101.887	9
104			min	-295.575	7	-80.868	13	0.092	9	1575.469	9	-9750.811	13	-101.887	9	-84.774	7
105		3	max	294.935	9	-20.352	9	1.939	3	9584.449	13	-1550.009	9	99.85	7	100.292	9
106			min	-295.575	7	-131.605	13	0.092	9	1550.009	9	-9584.449	13	-100.292	9	-99.85	7
107		4	max	294.935	9	-28.538	9	1.939	3	9338.636	13	-1511.73	9	114.925	7	98.698	9
108			min	-295.575	7	-182.342	13	0.092	9	1511.73	9	-9338.636	13	-98.698	9	-114.925	7
109		5	max	294.935	9	-36.724	9	1.939	3	9013.371	13	-1460.631	9	136.376	8	97.103	9
110			min	-295.575	7	-233.057	13	0.092	9	1460.631	9	-9013.371	13	-97.103	9	-136.376	8
111	M13	1	max	265.212	9	-38.798	9	4.95	9	9026.818	13	-1461.751	9	204.976	7	233.685	9
112			min	-265.718	7	-240.507	13	-4.16	7	1461.751	9	-9026.818	13	-233.685	9	-204.976	7

Envelope Member Section Stresses (Continued)

	Member	Sec		Axial[psi]	LC	y Shear[psi]	LC	z Shear[psi]	LC	y-Top[psi]	LC	y-Bot[psi]	LC	z-Top[psi]	LC	z-Bot[psi]	LC
113		2	max	265.212	9	-46.985	9	4.95	9	8610.47	13	-1394.585	9	133.122	7	148.178	9
114			min	-265.718	7	-291.244	13	-4.16	7	1394.585	9	-8610.47	13	-148.178	9	-133.122	7
115		3	max	265.212	9	-55.171	9	4.95	9	8114.67	13	-1314.599	9	61.267	7	62.672	9
116			min	-265.718	7	-341.981	13	-4.16	7	1314.599	9	-8114.67	13	-62.672	9	-61.267	7
117		4	max	265.212	9	-63.358	9	4.95	9	7539.42	13	-1221.794	9	55.574	13	10.588	7
118			min	-265.718	7	-392.718	13	-4.16	7	1221.794	9	-7539.42	13	-10.588	7	-55.574	13
119		5	max	265.212	9	-71.544	9	4.95	9	6884.717	13	-1116.169	9	108.342	9	82.443	7
120			min	-265.718	7	-443.455	13	-4.16	7	1116.169	9	-6884.717	13	-82.443	7	-108.342	9
121	M15	1	max	221.302	9	-267.145	9	45.818	9	-1105.666	9	10508.245	13	187.351	14	178.994	9
122			min	-222.156	7	-1830.105	13	-63.486	14	-10508.245	13	1105.666	9	-178.994	9	-187.351	14
123		2	max	221.302	9	-270.865	9	45.818	9	-1256.011	9	11545.021	13	74.882	9	164.717	13
124			min	-222.156	7	-1880.008	13	-63.486	14	-11545.021	13	1256.011	9	-164.717	13	-74.882	9
125		3	max	221.302	9	-274.585	9	45.818	9	-1408.435	9	12609.689	13	328.758	9	516.202	14
126			min	-222.156	7	-1929.912	13	-63.486	14	-12609.689	13	1408.435	9	-516.202	14	-328.758	9
127		4	max	221.302	9	-278.904	9	45.818	9	-1563.105	9	13702.582	13	582.634	9	867.978	14
128			min	-222.156	7	-1981.012	13	-63.486	14	-13702.582	13	1563.105	9	-867.978	14	-582.634	9
129		5	max	221.302	9	-283.222	9	45.818	9	-1720.189	9	14824.034	13	836.51	9	1219.754	14
130			min	-222.156	7	-2032.112	13	-63.486	14	-14824.034	13	1720.189	9	-1219.754	14	-836.51	9
131	M16	1	max	0.397	14	3620.294	13	18.094	13	-1732.337	9	14823.468	13	258.949	9	428.066	13
132			min	-0.294	9	407.087	9	-7.908	9	-14823.468	13	1732.337	9	-428.066	13	-258.949	9
133		2	max	0.397	14	3569.074	13	18.094	13	-1506.042	9	12814.427	13	215.129	9	327.806	13
134			min	-0.294	9	402.709	9	-7.908	9	-12814.427	13	1506.042	9	-327.806	13	-215.129	9
135		3	max	0.397	14	3517.854	13	18.094	13	-1282.195	9	10834.012	13	171.308	9	227.963	14
136			min	-0.294	9	398.33	9	-7.908	9	-10834.012	13	1282.195	9	-227.963	14	-171.308	9
137		4	max	0.397	14	3466.634	13	18.094	13	-1060.794	9	8882.223	13	127.487	9	128.187	14
138			min	-0.294	9	393.952	9	-7.908	9	-8882.223	13	1060.794	9	-128.187	14	-127.487	9
139		5	max	0.397	14	3415.414	13	18.094	13	-841.841	9	6959.061	13	83.667	9	76.335	7
140			min	-0.294	9	389.574	9	-7.908	9	-6959.061	13	841.841	9	-76.335	7	-83.667	9
141	M17	1	max	0.294	9	3044.954	13	7.004	7	-842.097	9	6962.794	13	99.924	9	92.463	7
142			min	-0.397	14	342.967	9	-6.519	9	-6962.794	13	842.097	9	-92.463	7	-99.924	9
143		2	max	0.294	9	2993.016	13	7.004	7	-651.739	9	5275.506	13	63.805	9	53.652	7
144			min	-0.397	14	338.23	9	-6.519	9	-5275.506	13	651.739	9	-53.652	7	-63.805	9
145		3	max	0.294	9	2941.078	13	7.004	7	-464.028	9	3617.246	13	28.642	3	20.302	6
146			min	-0.397	14	333.493	9	-6.519	9	-3617.246	13	464.028	9	-20.302	6	-28.642	3
147		4	max	0.294	9	2889.141	13	7.004	7	-278.965	9	1988.013	13	39.706	8	11.794	6
148			min	-0.397	14	328.756	9	-6.519	9	-1988.013	13	278.965	9	-11.794	6	-39.706	8
149		5	max	0.294	9	2837.203	13	7.004	7	-65.214	6	387.808	13	72.655	8	44.554	9
150			min	-0.397	14	324.018	9	-6.519	9	-387.808	13	65.214	6	-44.554	9	-72.655	8
151	M18	1	max	0.832	7	280.23	13	5.948	13	-65.214	6	387.809	13	15.7	7	101.739	13
152			min	-0.839	9	39.065	6	0.308	7	-387.809	13	65.214	6	-101.739	13	-15.7	7
153		2	max	0.832	7	227.693	13	5.948	13	-44.788	6	245.871	13	17.406	7	68.78	13
154			min	-0.839	9	34.029	6	0.308	7	-245.871	13	44.788	6	-68.78	13	-17.406	7
155		3	max	0.832	7	175.157	13	5.948	13	-27.177	6	133.296	13	19.113	7	35.82	13
156			min	-0.839	9	28.992	6	0.308	7	-133.296	13	27.177	6	-35.82	13	-19.113	7
157		4	max	0.832	7	125.254	13	5.948	13	-12.013	6	49.348	13	20.819	7	28.425	9
158			min	-0.839	9	25.272	6	0.308	7	-49.348	13	12.013	6	-28.425	9	-20.819	7
159		5	max	0.832	7	75.35	13	5.948	13	6.71	13	-0.695	9	30.098	13	22.271	9
160			min	-0.839	9	21.552	6	0.308	7	0.695	9	-6.71	13	-22.271	9	-30.098	13
161	M19	1	max	222.115	7	-293.837	9	48.558	9	-1725.018	9	10479.498	13	367.6	13	199.731	9
162			min	-221.237	9	-1828.3	13	-72.095	13	-10479.498	13	1725.018	9	-199.731	9	-367.6	13
163		2	max	222.115	7	-297.557	9	48.558	9	-1890.281	9	11515.266	13	69.327	9	51.581	7
164			min	-221.237	9	-1878.203	13	-72.095	13	-11515.266	13	1890.281	9	-51.581	7	-69.327	9
165		3	max	222.115	7	-301.277	9	48.558	9	-2057.623	9	12578.925	13	338.386	9	434.19	14
166			min	-221.237	9	-1928.107	13	-72.095	13	-12578.925	13	2057.623	9	-434.19	14	-338.386	9
167		4	max	222.115	7	-305.596	9	48.558	9	-2227.211	9	13670.808	13	607.445	9	833.159	14
168			min	-221.237	9	-1979.207	13	-72.095	13	-13670.808	13	2227.211	9	-833.159	14	-607.445	9
169		5	max	222.115	7	-309.914	9	48.558	9	-2399.213	9	14791.252	13	876.503	9	1232.128	14
170			min	-221.237	9	-2030.307	13	-72.095	13	-14791.252	13	2399.213	9	-1232.128	14	-876.503	9
171	M20	1	max	0.307	9	3611.503	13	10.147	14	-2387.066	9	14791.817	13	284.788	9	379.969	14
172			min	-0.388	14	573.105	9	-8.98	9	-14791.817	13	2387.066	9	-379.969	14	-284.788	9

Envelope Member Section Stresses (Continued)

	Member	Sec		Axial[psi]	LC	y Shear[psi]	LC	z Shear[psi]	LC	y-Top[psi]	LC	y-Bot[psi]	LC	z-Top[psi]	LC	z-Bot[psi]	LC
173		2	max	0.307	9	3560.283	13	10.147	14	-2067.985	9	12787.689	13	235.03	9	323.746	14
174			min	-0.388	14	568.726	9	-8.98	9	-12787.689	13	2067.985	9	-323.746	14	-235.03	9
175		3	max	0.307	9	3509.063	13	10.147	14	-1751.352	9	10812.187	13	185.273	9	267.523	14
176			min	-0.388	14	564.348	9	-8.98	9	-10812.187	13	1751.352	9	-267.523	14	-185.273	9
177		4	max	0.307	9	3457.843	13	10.147	14	-1437.166	9	8865.311	13	135.515	9	211.779	13
178			min	-0.388	14	559.97	9	-8.98	9	-8865.311	13	1437.166	9	-211.779	13	-135.515	9
179		5	max	0.307	9	3406.624	13	10.147	14	-1125.426	9	6947.062	13	85.758	9	156.205	13
180			min	-0.388	14	555.592	9	-8.98	9	-6947.062	13	1125.426	9	-156.205	13	-85.758	9
181	M21	1	max	0.388	14	3037.505	13	8.012	14	-1126.196	9	6950.753	13	102.839	9	177.761	13
182			min	-0.307	9	489.559	9	-7.53	9	-6950.753	13	1126.196	9	-177.761	13	-102.839	9
183		2	max	0.388	14	2985.567	13	8.012	14	-853.909	9	5267.628	13	61.114	9	134.005	13
184			min	-0.307	9	484.822	9	-7.53	9	-5267.628	13	853.909	9	-134.005	13	-61.114	9
185		3	max	0.388	14	2933.629	13	8.012	14	-584.269	9	3613.531	13	19.389	9	90.249	13
186			min	-0.307	9	480.085	9	-7.53	9	-3613.531	13	584.269	9	-90.249	13	-19.389	9
187		4	max	0.388	14	2881.692	13	8.012	14	-317.277	9	1988.462	13	6.42	7	46.493	13
188			min	-0.307	9	475.348	9	-7.53	9	-1988.462	13	317.277	9	-46.493	13	-6.42	7
189		5	max	0.388	14	2829.754	13	8.012	14	-52.933	9	392.42	13	44.729	7	64.062	9
190			min	-0.307	9	470.61	9	-7.53	9	-392.42	13	52.933	9	-64.062	9	-44.729	7
191	M22	1	max	0.877	9	282.281	13	0.423	9	-52.945	9	392.42	13	104.231	13	32.617	9
192			min	-1.028	14	33.612	9	-3.31	8	-392.42	13	52.945	9	-32.617	9	-104.231	13
193		2	max	0.877	9	229.745	13	0.423	9	-35.566	9	249.336	13	87.904	13	30.271	9
194			min	-1.028	14	28.576	9	-3.31	8	-249.336	13	35.566	9	-30.271	9	-87.904	13
195		3	max	0.877	9	177.209	13	0.423	9	-21.003	9	135.614	13	71.577	13	27.925	9
196			min	-1.028	14	23.539	9	-3.31	8	-135.614	13	21.003	9	-27.925	9	-71.577	13
197		4	max	0.877	9	127.305	13	0.423	9	-8.887	9	50.519	13	55.249	13	25.579	9
198			min	-1.028	14	19.819	9	-3.31	8	-50.519	13	8.887	9	-25.579	9	-55.249	13
199		5	max	0.877	9	77.402	13	0.423	9	6.686	13	-1.078	6	39.083	14	23.233	9
200			min	-1.028	14	16.099	9	-3.31	8	1.078	6	-6.686	13	-23.233	9	-39.083	14
201	M23	1	max	0	14	35.813	7	4.733	9	150.49	9	131.421	7	491.927	14	87.74	9
202			min	0	2	-20.753	9	-9.175	13	-131.421	7	-150.49	9	-241.285	9	-178.883	14
203		2	max	0	14	30.73	7	4.733	9	95.39	9	49.131	7	269.193	14	45.924	9
204			min	0	2	-23.803	9	-9.175	13	-49.131	7	-95.39	9	-126.291	9	-97.888	14
205		3	max	0	14	25.647	7	4.733	9	41.635	13	-20.588	7	46.458	14	4.108	9
206			min	0	2	-26.853	9	-9.175	13	20.588	7	-41.635	13	-11.296	9	-16.894	14
207		4	max	0	14	20.564	7	4.733	9	77.736	7	37.439	9	103.698	9	64.39	13
208			min	0	2	-29.902	9	-9.175	13	-37.439	9	-77.736	7	-177.072	13	-37.708	9
209		5	max	0	14	15.482	7	4.733	9	122.312	7	115.167	9	218.693	9	145.448	13
210			min	0	2	-32.952	9	-9.175	13	-115.167	9	-122.312	7	-399.982	13	-79.525	9
211	M24	1	max	172.615	14	9.562	2	4.68	9	19.329	9	20.647	8	270.65	13	83.459	9
212			min	-117.18	9	5.455	6	-5.482	14	-20.647	8	-19.329	9	-229.513	9	-98.418	13
213		2	max	172.615	14	4.726	9	4.68	9	34.79	9	10.209	8	137.707	13	42.116	9
214			min	-117.18	9	1.679	8	-5.482	14	-10.209	8	-34.79	9	-115.819	9	-50.075	13
215		3	max	172.615	14	1.677	9	4.68	9	42.709	9	12.343	8	14.655	8	1.258	6
216			min	-117.18	9	-3.404	8	-5.482	14	-12.343	8	-42.709	9	-3.459	6	-5.329	8
217		4	max	172.615	14	-1.373	9	4.68	9	43.084	9	27.047	8	111.569	9	47.178	14
218			min	-117.18	9	-9.038	13	-5.482	14	-27.047	8	-43.084	9	-129.74	14	-40.571	9
219		5	max	172.615	14	-4.423	9	4.68	9	35.917	9	54.324	8	225.263	9	95.613	14
220			min	-117.18	9	-15.137	13	-5.482	14	-54.324	8	-35.917	9	-262.935	14	-81.914	9
221	M25	1	max	120.086	7	10.676	9	5.39	9	0.65	7	39.505	3	288.041	7	101.984	9
222			min	-120.547	9	4.548	7	-5.367	7	-39.505	3	-0.65	7	-280.456	9	-104.742	7
223		2	max	120.086	7	7.626	9	5.39	9	19.808	9	25.403	14	157.647	7	54.364	9
224			min	-120.547	9	-0.535	7	-5.367	7	-25.403	14	-19.808	9	-149.5	9	-57.326	7
225		3	max	120.086	7	4.577	9	5.39	9	34.899	9	29.628	8	30.717	8	6.744	9
226			min	-120.547	9	-5.618	7	-5.367	7	-29.628	8	-34.899	9	-18.545	9	-11.17	8
227		4	max	120.086	7	1.527	9	5.39	9	42.447	9	49.469	8	112.411	9	37.506	7
228			min	-120.547	9	-10.701	7	-5.367	7	-49.469	8	-42.447	9	-103.141	7	-40.877	9
229		5	max	120.086	7	-1.523	9	5.39	9	42.451	9	81.881	8	243.366	9	84.922	7
230			min	-120.547	9	-15.784	7	-5.367	7	-81.881	8	-42.451	9	-233.534	7	-88.497	9
231	M26	1	max	108.523	7	12.744	9	2.06	9	7.438	7	57.446	3	92.557	13	11.451	9
232			min	-108.812	9	2.737	7	-2.043	7	-57.446	3	-7.438	7	-31.491	9	-33.657	13

Envelope Member Section Stresses (Continued)

	Member	Sec		Axial[psi]	LC	y Shear[psi]	LC	z Shear[psi]	LC	y-Top[psi]	LC	y-Bot[psi]	LC	z-Top[psi]	LC	z-Bot[psi]	LC
233		2	max	108.523	7	9.694	9	2.06	9	11.82	4	40.155	3	56.083	13	3.048	7
234			min	-108.812	9	-2.346	7	-2.043	7	-40.155	3	-11.82	4	-8.382	7	-20.394	13
235		3	max	108.523	7	6.645	9	2.06	9	30.398	9	39.051	8	68.615	9	21.098	7
236			min	-108.812	9	-7.429	7	-2.043	7	-39.051	8	-30.398	9	-58.02	7	-24.951	9
237		4	max	108.523	7	3.595	9	2.06	9	43.06	9	61.517	8	118.668	9	39.148	7
238			min	-108.812	9	-12.512	7	-2.043	7	-61.517	8	-43.06	9	-107.657	7	-43.152	9
239		5	max	108.523	7	0.545	9	2.06	9	48.18	9	96.554	8	168.722	9	57.198	7
240			min	-108.812	9	-17.595	7	-2.043	7	-96.554	8	-48.18	9	-157.295	7	-61.353	9
241	M27	1	max	145.361	7	18.624	9	19.679	9	57.546	7	70.36	9	1256.739	7	452.956	9
242			min	-145.085	9	-2.862	7	-19.684	7	-70.36	9	-57.546	7	-1245.629	9	-456.996	7
243		2	max	145.361	7	15.574	9	19.679	9	44.182	7	46.217	3	778.517	7	279.102	9
244			min	-145.085	9	-7.945	7	-19.684	7	-46.217	3	-44.182	7	-767.53	9	-283.097	7
245		3	max	145.361	7	12.525	9	19.679	9	18.247	7	40.486	14	300.296	7	105.248	9
246			min	-145.085	9	-13.027	7	-19.684	7	-40.486	14	-18.247	7	-289.432	9	-109.199	7
247		4	max	145.361	7	9.475	9	19.679	9	33.885	9	55.506	8	188.667	9	64.7	7
248			min	-145.085	9	-18.11	7	-19.684	7	-55.506	8	-33.885	9	-177.925	7	-68.606	9
249		5	max	145.361	7	6.425	9	19.679	9	53.547	9	99.802	8	666.766	9	238.599	7
250			min	-145.085	9	-23.193	7	-19.684	7	-99.802	8	-53.547	9	-656.146	7	-242.46	9
251	M28	1	max	38.26	9	15.013	9	23.085	7	28.653	7	63.74	3	1423.668	9	513.841	7
252			min	-40.892	14	1.294	7	-23.097	9	-63.74	3	-28.653	7	-1413.062	7	-517.697	9
253		2	max	38.26	9	11.964	9	23.085	7	25.568	7	42.054	3	862.532	9	309.896	7
254			min	-40.892	14	-3.789	7	-23.097	9	-42.054	3	-25.568	7	-852.214	7	-313.648	9
255		3	max	38.26	9	8.914	9	23.085	7	18.964	9	32.939	3	301.397	9	105.951	7
256			min	-40.892	14	-8.872	7	-23.097	9	-32.939	3	-18.964	9	-291.365	7	-109.599	9
257		4	max	38.26	9	5.864	9	23.085	7	37.239	9	48.018	8	269.483	7	94.45	9
258			min	-40.892	14	-13.955	7	-23.097	9	-48.018	8	-37.239	9	-259.738	9	-97.994	7
259		5	max	38.26	9	2.814	9	23.085	7	47.972	9	83.073	8	830.331	7	298.499	9
260			min	-40.892	14	-19.037	7	-23.097	9	-83.073	8	-47.972	9	-820.873	9	-301.939	7
261	M29	1	max	230.677	9	13.553	13	5.15	7	39.449	7	51.06	3	195.35	9	80.01	14
262			min	-230.209	7	6.218	7	-5.174	9	-51.06	3	-39.449	7	-220.029	14	-71.036	9
263		2	max	230.677	9	7.645	9	5.15	7	48.543	7	27.485	3	69.642	9	37.563	14
264			min	-230.209	7	1.135	7	-5.174	9	-27.485	3	-48.543	7	-103.297	14	-25.325	9
265		3	max	230.677	9	4.595	9	5.15	7	45.066	7	16.481	3	63.663	7	20.387	9
266			min	-230.209	7	-3.947	7	-5.174	9	-16.481	3	-45.066	7	-56.065	9	-23.15	7
267		4	max	230.677	9	1.545	9	5.15	7	29.017	7	18.281	14	188.789	7	66.099	9
268			min	-230.209	7	-9.03	7	-5.174	9	-18.281	14	-29.017	7	-181.773	9	-68.65	7
269		5	max	230.677	9	-1.504	9	5.15	7	1.303	4	32.187	3	313.914	7	111.811	9
270			min	-230.209	7	-14.113	7	-5.174	9	-32.187	3	-1.303	4	-307.481	9	-114.15	7
271	M30	1	max	9.348	13	21.453	7	8.114	7	-3.471	9	23.895	13	184.193	9	66.181	7
272			min	-1.368	7	-49.199	3	-8.181	9	-23.895	13	3.471	9	-181.999	7	-66.979	9
273		2	max	9.348	13	10.915	7	8.114	7	26.209	7	134.859	3	169.264	13	6.448	7
274			min	-1.368	7	-59.737	3	-8.181	9	-134.859	3	-26.209	7	-17.731	7	-61.551	13
275		3	max	9.348	13	0.377	7	8.114	7	37.847	7	268.841	3	301.681	14	53.472	9
276			min	-1.368	7	-71.696	13	-8.181	9	-268.841	3	-37.847	7	-147.049	9	-109.702	14
277		4	max	9.348	13	-10.16	7	8.114	7	27.765	7	428.11	13	434.26	14	113.698	9
278			min	-1.368	7	-84.341	13	-8.181	9	-428.11	13	-27.765	7	-312.67	9	-157.913	14
279		5	max	9.348	13	-20.698	7	8.114	7	-4.036	7	614.974	13	566.838	14	173.924	9
280			min	-1.368	7	-96.987	13	-8.181	9	-614.974	13	4.036	7	-478.291	9	-206.123	14
281	M31	1	max	104.681	9	41.075	9	23.088	14	63.764	7	581.53	3	764.143	9	411.833	14
282			min	-108.614	14	-12.911	7	-15.847	9	-581.53	3	-63.764	7	-1132.542	14	-277.87	9
283		2	max	104.681	9	36.863	9	23.088	14	23.151	7	528.708	13	379.148	9	207.864	14
284			min	-108.614	14	-19.931	7	-15.847	9	-528.708	13	-23.151	7	-571.625	14	-137.872	9
285		3	max	104.681	9	32.65	9	23.088	14	-34.826	7	498.169	13	3.167	7	4.077	13
286			min	-108.614	14	-26.951	7	-15.847	9	-498.169	13	34.826	7	-11.213	13	-1.152	7
287		4	max	104.681	9	28.438	9	23.088	14	-11.609	9	488.465	13	550.21	14	142.124	9
288			min	-108.614	14	-33.972	7	-15.847	9	-488.465	13	11.609	9	-390.842	9	-200.076	14
289		5	max	104.681	9	24.226	9	23.088	14	53.518	9	499.597	13	1111.127	14	282.123	9
290			min	-108.614	14	-40.992	7	-15.847	9	-499.597	13	-53.518	9	-775.837	9	-404.046	14
291	M32	1	max	2.163	14	98.102	13	11.845	14	-57.041	9	624.25	13	498.257	9	247.524	14
292			min	-1.453	9	19.186	9	-8.53	9	-624.25	13	57.041	9	-680.69	14	-181.185	9

Envelope Member Section Stresses (Continued)

	Member	Sec		Axial[psi]	LC	y Shear[psi]	LC	z Shear[psi]	LC	y-Top[psi]	LC	y-Bot[psi]	LC	z-Top[psi]	LC	z-Bot[psi]	LC
293		2	max	2.163	14	85.457	13	11.845	14	-24.013	9	435.086	13	325.557	9	160.318	14
294			min	-1.453	9	12.863	9	-8.53	9	-435.086	13	24.013	9	-440.875	14	-118.384	9
295		3	max	2.163	14	72.811	13	11.845	14	-4.017	9	271.985	13	152.857	9	73.113	14
296			min	-1.453	9	6.54	9	-8.53	9	-271.985	13	4.017	9	-201.061	14	-55.584	9
297		4	max	2.163	14	60.166	13	11.845	14	2.947	9	134.947	13	39.059	13	7.216	9
298			min	-1.453	9	0.218	9	-8.53	9	-134.947	13	-2.947	9	-19.843	9	-14.203	13
299		5	max	2.163	14	49.664	14	11.845	14	-3.12	9	23.972	13	278.569	14	70.016	9
300			min	-1.453	9	-7.569	2	-8.53	9	-23.972	13	3.12	9	-192.544	9	-101.298	14
301	M33	1	max	2.769	9	45.221	3	2.915	7	-3.678	9	32.046	13	174.527	9	62.381	7
302			min	-2.752	7	-22.751	7	-16.35	13	-32.046	13	3.678	9	-171.547	7	-63.464	9
303		2	max	2.769	9	0.483	9	2.915	7	12.041	9	108.595	7	78.353	9	107.967	14
304			min	-2.752	7	-40.726	8	-4.962	13	-108.595	7	-12.041	9	-296.91	14	-28.492	9
305		3	max	2.769	9	-10.02	9	6.437	14	-3.684	9	299.888	8	17.277	7	99.252	13
306			min	-2.752	7	-120.938	13	-2.969	9	-299.888	8	3.684	9	-272.942	13	-6.283	7
307		4	max	2.769	9	-20.524	9	17.826	14	-54.047	9	821.815	13	120.138	14	41.452	9
308			min	-2.752	7	-204.446	13	-2.969	9	-821.815	13	54.047	9	-113.994	9	-43.687	14
309		5	max	2.769	9	-29.09	9	29.214	14	-135.855	9	1627.32	13	882.025	14	76.424	9
310			min	-2.752	7	-284.078	13	-2.969	9	-1627.32	13	135.855	9	-210.167	9	-320.736	14
311	M34	1	max	4.508	9	279.87	13	2.519	9	-137.076	9	1645.151	13	790.648	14	51.719	9
312			min	-4.471	7	28.453	9	-28.597	14	-1645.151	13	137.076	9	-142.228	9	-287.508	14
313		2	max	4.508	9	200.237	13	2.519	9	-57.373	9	853.524	13	59.118	7	22.045	9
314			min	-4.471	7	19.886	9	-17.209	14	-853.524	13	57.373	9	-60.623	9	-21.498	7
315		3	max	4.508	9	116.729	13	2.519	9	-9.113	9	337.281	8	20.982	9	117.921	13
316			min	-4.471	7	9.382	9	-5.82	14	-337.281	8	9.113	9	-324.282	13	-7.63	9
317		4	max	4.508	9	37.376	8	5.576	13	4.508	9	128.708	7	102.588	9	119.384	14
318			min	-4.471	7	-1.121	9	-2.481	7	-128.708	7	-4.508	9	-328.307	14	-37.305	9
319		5	max	4.508	9	21.445	7	16.964	13	-13.315	9	105.391	13	184.193	9	66.181	7
320			min	-4.471	7	-49.199	3	-2.481	7	-105.391	13	13.315	9	-181.999	7	-66.979	9
321	M35	1	max	6.528	14	49.642	14	2.635	9	-15.523	9	105.406	13	278.569	14	70.016	9
322			min	-4.701	9	-7.569	2	-3.927	14	-105.406	13	15.523	9	-192.544	9	-101.298	14
323		2	max	6.528	14	-12.909	6	2.635	9	-46.385	6	80.08	13	151.37	14	38.981	9
324			min	-4.701	9	-32.137	13	-3.927	14	-80.08	13	46.385	6	-107.198	9	-55.044	14
325		3	max	6.528	14	-23.412	6	2.635	9	-106.273	6	323.749	13	24.171	14	7.947	9
326			min	-4.701	9	-115.644	13	-3.927	14	-323.749	13	106.273	6	-21.853	9	-8.789	14
327		4	max	6.528	14	-33.916	6	2.635	9	-200.8	6	842.802	13	63.492	9	37.492	13
328			min	-4.701	9	-199.152	13	-3.927	14	-842.802	13	200.8	6	-103.102	13	-23.088	9
329		5	max	6.528	14	-42.483	6	2.635	9	-326.771	6	1630.85	13	148.837	9	83.719	14
330			min	-4.701	9	-278.784	13	-3.927	14	-1630.85	13	326.771	6	-230.227	14	-54.123	9
331	M36	1	max	4.229	14	283.017	13	4.506	14	-323.629	6	1613.22	13	218.758	9	115.734	14
332			min	-2.884	9	43.215	6	-3.087	9	-1613.22	13	323.629	6	-318.268	14	-79.548	9
333		2	max	4.229	14	203.385	13	4.506	14	-195.243	6	811.214	13	118.756	9	62.661	14
334			min	-2.884	9	34.649	6	-3.087	9	-811.214	13	195.243	6	-172.319	14	-43.184	9
335		3	max	4.229	14	119.877	13	4.506	14	-98.301	6	278.202	13	18.755	9	9.599	13
336			min	-2.884	9	24.145	6	-3.087	9	-278.202	13	98.301	6	-26.397	13	-6.82	9
337		4	max	4.229	14	36.369	13	4.506	14	-2.667	14	61.092	2	119.58	14	29.544	9
338			min	-2.884	9	13.641	6	-3.087	9	-61.092	2	2.667	14	-81.246	9	-43.484	14
339		5	max	4.229	14	8.784	2	4.506	14	-5.138	6	31.941	13	265.529	14	65.908	9
340			min	-2.884	9	-45.775	14	-3.087	9	-31.941	13	5.138	6	-181.248	9	-96.556	14
341	M37	1	max	2.483	14	8.784	2	5.233	9	-3.596	6	21.345	13	265.529	14	65.908	9
342			min	-1.701	9	-45.772	14	-7.675	14	-21.345	13	3.596	6	-181.248	9	-96.556	14
343		2	max	2.483	14	0.286	9	5.233	9	3.439	9	123.663	14	110.191	13	27.384	9
344			min	-1.701	9	-55.905	13	-7.675	14	-123.663	14	-3.439	9	-75.307	9	-40.069	13
345		3	max	2.483	14	-6.037	9	5.233	9	-2.488	9	251.794	13	30.634	9	16.452	14
346			min	-1.701	9	-68.551	13	-7.675	14	-251.794	13	2.488	9	-45.242	14	-11.139	9
347		4	max	2.483	14	-12.36	9	5.233	9	-21.446	9	406.113	13	136.574	9	72.955	14
348			min	-1.701	9	-81.196	13	-7.675	14	-406.113	13	21.446	9	-200.627	14	-49.663	9
349		5	max	2.483	14	-18.682	9	5.233	9	-53.435	9	586.495	13	242.515	9	129.459	14
350			min	-1.701	9	-93.841	13	-7.675	14	-586.495	13	53.435	9	-356.012	14	-88.187	9
351	M38	1	max	0.889	6	33.074	7	0.517	9	-249.228	9	1823.948	13	95.015	14	9.31	9
352			min	-6.938	3	7.381	9	-2.148	14	-1823.948	13	249.228	9	-25.603	9	-34.551	14

Envelope Member Section Stresses (Continued)

	Member	Sec		Axial[psi]	LC	y Shear[psi]	LC	z Shear[psi]	LC	y-Top[psi]	LC	y-Bot[psi]	LC	z-Top[psi]	LC	z-Bot[psi]	LC
353		2	max	0.889	6	20.429	7	0.517	9	-240.355	9	1764.831	13	42.831	14	4.745	9
354			min	-6.938	3	-0.206	9	-2.148	14	-1764.831	13	240.355	9	-13.048	9	-15.575	14
355		3	max	0.889	6	7.783	7	0.517	9	-233.552	6	1743.245	13	-0.493	9	3.567	13
356			min	-6.938	3	-7.793	9	-2.148	14	-1743.245	13	233.552	6	-9.81	13	0.179	9
357		4	max	0.889	6	-4.862	7	0.517	9	-241.781	6	1759.19	13	12.062	9	22.541	13
358			min	-6.938	3	-15.38	9	-2.148	14	-1759.19	13	241.781	6	-61.989	13	-4.386	9
359		5	max	0.889	6	-14.708	6	0.517	9	-268.776	6	1812.665	13	24.617	9	41.515	13
360			min	-6.938	3	-29.209	13	-2.148	14	-1812.665	13	268.776	6	-114.168	13	-8.952	9
361	M39	1	max	9.01	13	92.802	13	5.025	9	6.444	7	578.029	13	233.164	13	84.509	9
362			min	-1.606	7	19.402	7	-4.993	7	-578.029	13	-6.444	7	-232.399	9	-84.787	13
363		2	max	9.01	13	80.156	13	5.025	9	35.572	7	399.789	13	186.998	13	47.516	9
364			min	-1.606	7	8.864	7	-4.993	7	-399.789	13	-35.572	7	-130.668	9	-67.999	13
365		3	max	9.01	13	67.511	13	5.025	9	42.982	7	249.971	3	140.832	13	10.522	9
366			min	-1.606	7	-1.674	7	-4.993	7	-249.971	3	-42.982	7	-28.936	9	-51.212	13
367		4	max	9.01	13	55.759	3	5.025	9	28.672	7	124.189	3	94.667	13	25.622	7
368			min	-1.606	7	-12.212	7	-4.993	7	-124.189	3	-28.672	7	-70.46	7	-34.424	13
369		5	max	9.01	13	45.221	3	5.025	9	-2.244	9	21.449	13	174.527	9	62.381	7
370			min	-1.606	7	-22.75	7	-4.993	7	-21.449	13	2.244	9	-171.547	7	-63.464	9
371	M40	1	max	31.86	14	600.092	13	3.156	9	-542.504	9	4754.28	13	254.379	14	68.224	9
372			min	-3.024	9	75.455	9	-4.27	14	-4754.28	13	542.504	9	-187.616	9	-92.501	14
373		2	max	31.86	14	591.135	13	3.156	9	-391.602	9	3526.68	13	167.94	14	44.992	9
374			min	-3.024	9	70.976	9	-4.27	14	-3526.68	13	391.602	9	-123.727	9	-61.069	14
375		3	max	31.86	14	582.177	13	3.156	9	-249.932	9	2317.542	13	81.501	14	21.759	9
376			min	-3.024	9	66.497	9	-4.27	14	-2317.542	13	249.932	9	-59.838	9	-29.637	14
377		4	max	31.86	14	573.219	13	3.156	9	-117.493	9	1126.867	13	4.051	9	1.796	14
378			min	-3.024	9	62.018	9	-4.27	14	-1126.867	13	117.493	9	-4.938	14	-1.473	9
379		5	max	31.86	14	564.261	13	3.156	9	45.345	13	-5.715	9	67.94	9	33.228	14
380			min	-3.024	9	57.539	9	-4.27	14	5.715	9	-45.345	13	-91.377	14	-24.705	9
381	M41	1	max	3.154	9	-85.691	6	3.298	9	45.317	13	-6.786	9	88.041	14	25.426	9
382			min	-4.646	14	-561.743	13	-4.17	14	6.786	9	-45.317	13	-69.92	9	-32.015	14
383		2	max	3.154	9	-90.17	6	3.298	9	-173.638	6	1121.704	13	3.617	13	1.149	9
384			min	-4.646	14	-570.7	13	-4.17	14	-1121.704	13	173.638	6	-3.16	9	-1.315	13
385		3	max	3.154	9	-94.649	6	3.298	9	-364.101	6	2307.189	13	63.6	9	29.387	14
386			min	-4.646	14	-579.658	13	-4.17	14	-2307.189	13	364.101	6	-80.816	14	-23.127	9
387		4	max	3.154	9	-99.128	6	3.298	9	-563.795	6	3511.136	13	130.361	9	60.089	14
388			min	-4.646	14	-588.616	13	-4.17	14	-3511.136	13	563.795	6	-165.244	14	-47.404	9
389		5	max	3.154	9	-103.607	6	3.298	9	-772.72	6	4733.546	13	197.121	9	90.79	14
390			min	-4.646	14	-597.574	13	-4.17	14	-4733.546	13	772.72	6	-249.672	14	-71.68	9
391	M42	1	max	0	14	56.477	7	49.462	14	-43.695	9	683.648	13	577.561	9	792.241	14
392			min	0	2	-18.578	9	-35.171	9	-683.648	13	43.695	9	-792.241	14	-577.561	9
393		2	max	0	14	44.784	7	49.462	14	-62.21	9	663.918	13	285.241	9	381.141	14
394			min	0	2	-25.594	9	-35.171	9	-663.918	13	62.21	9	-381.141	14	-285.241	9
395		3	max	0	14	33.09	7	49.462	14	-86.607	9	655.952	13	30.582	13	7.078	9
396			min	0	2	-32.61	9	-35.171	9	-655.952	13	86.607	9	-7.078	9	-30.582	13
397		4	max	0	14	21.397	7	49.462	14	-98.763	6	659.75	13	441.191	13	299.397	9
398			min	0	2	-39.626	9	-35.171	9	-659.75	13	98.763	6	-299.397	9	-441.191	13
399		5	max	0	14	9.703	7	49.462	14	-107.669	6	675.311	13	852.159	14	591.716	9
400			min	0	2	-46.642	9	-35.171	9	-675.311	13	107.669	6	-591.716	9	-852.159	14
401	M43	1	max	0	14	8.743	9	-1.284	7	-262.489	6	1872.472	3	1142.782	13	-260.123	9
402			min	0	2	-8.727	7	-17.368	9	-1872.469	3	262.489	6	220.061	9	-1350.824	13
403		2	max	0	14	8.743	9	4.547	7	-264.879	6	1854.428	13	1005.392	13	-177.233	9
404			min	0	2	-8.727	7	-13.869	9	-1854.425	13	264.88	6	149.937	9	-1188.422	13
405		3	max	0	14	8.743	9	10.378	7	-260.84	9	1889.236	13	939.362	13	-136.519	9
406			min	0	2	-8.727	7	-10.371	9	-1889.233	13	260.84	9	115.493	9	-1110.372	13
407		4	max	0	14	8.743	9	16.209	7	-173.569	9	1959.212	13	944.693	13	-137.98	9
408			min	0	2	-8.727	7	-6.872	9	-1959.209	13	173.569	9	116.73	9	-1116.674	13
409		5	max	0	14	8.743	9	22.04	7	-103.881	9	2064.356	13	1021.385	13	-181.618	9
410			min	0	2	-8.727	7	-3.374	9	-2064.352	13	103.881	9	153.647	9	-1207.328	13
411	M44	1	max	446.766	9	40.814	13	-0.367	9	179.322	7	420.628	9	-94.867	7	443.1	9
412			min	-661.041	13	14.84	9	-10.017	13	-420.627	9	-179.322	7	-374.858	9	112.138	7

Envelope Member Section Stresses (Continued)

	Member	Sec		Axial[psi]	LC	y Shear[psi]	LC	z Shear[psi]	LC	y-Top[psi]	LC	y-Bot[psi]	LC	z-Top[psi]	LC	z-Bot[psi]	LC
413		2	max	446.766	9	27.587	13	-0.367	9	407.453	7	307.567	9	249.558	7	188.645	9
414			min	-661.041	13	8.226	9	-10.017	13	-307.566	9	-407.453	7	-159.592	9	-294.99	7
415		3	max	446.766	9	14.36	13	-0.367	9	603.321	8	257.339	9	417.77	8	84.9	9
416			min	-661.041	13	1.613	9	-10.017	13	-257.338	9	-603.322	8	-71.824	9	-493.825	8
417		4	max	446.766	9	3.314	14	-0.367	9	710.88	8	269.943	9	389.778	8	131.864	9
418			min	-661.041	13	-7.252	2	-10.017	13	-269.943	9	-710.881	8	-111.556	9	-460.737	8
419		5	max	446.766	9	-6.606	14	-0.367	9	713.718	8	345.381	9	149.289	8	329.538	9
420			min	-661.041	13	-18.275	2	-10.017	13	-345.381	9	-713.719	8	-278.785	9	-176.467	8
421	M45	1	max	448.508	9	35.409	13	-0.936	9	534.257	8	341.558	9	79.284	8	386.975	9
422			min	-449.186	7	14.967	6	-5.608	13	-341.557	9	-534.258	8	-327.376	9	-93.718	8
423		2	max	448.508	9	22.182	13	-0.936	9	789.428	8	217.446	9	443.406	8	131.956	9
424			min	-449.186	7	8.353	6	-5.608	13	-217.445	9	-789.43	8	-111.633	9	-524.127	8
425		3	max	448.508	9	8.955	13	-0.936	9	939.878	8	156.167	9	595.03	8	27.647	9
426			min	-449.186	7	1.74	6	-5.608	13	-156.167	9	-939.88	8	-23.389	9	-703.354	8
427		4	max	448.508	9	-1.724	14	-0.936	9	985.607	8	157.721	9	534.156	8	74.047	9
428			min	-449.186	7	-9.107	7	-5.608	13	-157.721	9	-985.609	8	-62.643	9	-631.399	8
429		5	max	448.508	9	-11.02	9	-0.936	9	926.614	8	222.108	9	260.785	8	271.157	9
430			min	-449.186	7	-20.129	7	-5.608	13	-222.108	9	-926.616	8	-229.396	9	-308.26	8
431	M46	1	max	431.158	9	31.369	13	0.279	9	795.95	8	197.488	9	250.331	8	356.209	9
432			min	-431.403	7	14.277	6	-3.236	13	-197.488	9	-795.952	8	-301.349	9	-295.904	8
433		2	max	431.158	9	18.142	13	0.279	9	1010.786	13	89.693	9	579.308	13	84.941	9
434			min	-431.403	7	7.663	6	-3.236	13	-89.693	9	-1010.788	13	-71.859	9	-684.77	13
435		3	max	431.158	9	4.914	13	0.279	9	1151.056	13	44.731	9	739.161	13	-35.618	9
436			min	-431.403	7	0.544	7	-3.236	13	-44.73	9	-1151.058	13	30.133	9	-873.725	13
437		4	max	431.158	9	-4.909	9	0.279	9	1165.66	13	62.601	9	644.017	13	-5.467	9
438			min	-431.403	7	-10.479	7	-3.236	13	-62.601	9	-1165.662	13	4.625	9	-761.26	13
439		5	max	431.158	9	-11.522	9	0.279	9	1054.599	13	143.304	9	322.864	14	175.393	9
440			min	-431.403	7	-21.54	13	-3.236	13	-143.304	9	-1054.601	13	-148.381	9	-381.641	14
441	M47	1	max	524.908	9	27.012	13	4.894	7	1050.635	8	256.685	9	308.378	14	186.728	9
442			min	-524.737	7	13.313	6	-5.157	9	-256.685	9	-1050.637	8	-157.97	9	-364.518	14
443		2	max	524.908	9	13.908	13	4.894	7	1179.188	13	66.299	9	658.884	13	-37.079	9
444			min	-524.737	7	6.126	7	-5.157	9	-66.299	9	-1179.19	13	31.368	9	-778.833	13
445		3	max	524.908	9	5.243	9	4.894	7	1253.362	13	-62.423	9	789.375	13	-112.977	9
446			min	-524.737	7	-4.793	7	-5.157	9	62.422	9	-1253.364	13	95.577	9	-933.08	13
447		4	max	524.908	9	-1.309	9	4.894	7	1204.205	13	-129.478	9	669.608	13	-40.966	9
448			min	-524.737	7	-15.713	7	-5.157	9	129.478	9	-1204.207	13	34.657	9	-791.509	13
449		5	max	524.908	9	-7.86	9	4.894	7	1031.718	13	-122.7	6	327.715	14	178.954	9
450			min	-524.737	7	-26.632	7	-5.157	9	122.7	6	-1031.72	13	-151.393	9	-387.375	14
451	M48	1	max	164.289	7	23.878	7	9.985	9	1062.166	13	143.11	7	498.924	8	511.85	9
452			min	-163.617	9	10.091	9	-9.224	7	-143.11	7	-1062.168	13	-433.02	9	-589.753	8
453		2	max	164.289	7	12.856	7	9.985	9	1203.828	13	-119.026	7	698.571	8	129.72	9
454			min	-163.617	9	3.477	9	-9.224	7	119.025	7	-1203.83	13	-109.742	9	-825.745	8
455		3	max	164.289	7	1.833	7	9.985	9	1219.824	13	-235.361	6	775	13	-101.7	9
456			min	-163.617	9	-3.136	9	-9.224	7	235.36	6	-1219.826	13	86.037	9	-916.088	13
457		4	max	164.289	7	-7.153	6	9.985	9	1110.154	13	-195.052	6	625.858	13	-153.689	6
458			min	-163.617	9	-16.253	13	-9.224	7	195.052	6	-1110.156	13	130.019	6	-739.794	13
459		5	max	164.289	7	-13.766	6	9.985	9	891.451	3	-8.065	9	258.142	14	339.411	7
460			min	-163.617	9	-29.48	13	-9.224	7	8.065	9	-891.453	3	-287.138	7	-305.137	14
461	M49	1	max	867.541	7	23.219	9	15.935	7	1111.348	8	340.676	9	289.302	14	442.247	7
462			min	-866.526	9	8.745	8	-14.187	9	-340.676	9	-1111.35	8	-374.136	7	-341.969	14
463		2	max	867.541	7	16.605	9	15.935	7	1070.863	13	16.718	9	592.361	13	-1.541	7
464			min	-866.526	9	-2.277	8	-14.187	9	-16.718	9	-1070.865	13	1.303	7	-700.199	13
465		3	max	867.541	7	9.992	9	15.935	7	1026.951	13	-204.358	6	672.455	13	-194.145	7
466			min	-866.526	9	-13.3	8	-14.187	9	204.358	6	-1026.953	13	164.245	7	-794.875	13
467		4	max	867.541	7	3.378	9	15.935	7	863.93	3	2.218	7	497.552	13	-128.669	6
468			min	-866.526	9	-24.322	8	-14.187	9	-2.218	7	-863.932	3	108.852	6	-588.131	13
469		5	max	867.541	7	-3.235	9	15.935	7	621.736	3	434.149	7	118.028	14	190.341	2
470			min	-866.526	9	-35.345	8	-14.187	9	-434.148	7	-621.737	3	-161.027	2	-139.515	14
471	M50	1	max	48.488	14	-30.042	9	17.512	14	6884.905	13	-776.97	9	269.013	7	245.414	9
472			min	-10.7	9	-456.769	13	-5.112	7	776.97	9	-6884.905	13	-245.414	9	-269.013	7

Envelope Member Section Stresses (Continued)

	Member	Sec		Axial[psi]	LC	y Shear[psi]	LC	z Shear[psi]	LC	y-Top[psi]	LC	y-Bot[psi]	LC	z-Top[psi]	LC	z-Bot[psi]	LC
473		2	max	48.488	14	-38.228	9	7.815	14	6129.901	13	-723.517	9	180.713	7	168.07	9
474			min	-10.7	9	-507.506	13	-5.112	7	723.517	9	-6129.901	13	-168.07	9	-180.713	7
475		3	max	48.488	14	-46.414	9	4.478	9	5295.446	13	-657.244	9	154.714	13	90.725	9
476			min	-10.7	9	-558.243	13	-5.112	7	657.244	9	-5295.446	13	-90.725	9	-154.714	13
477		4	max	48.488	14	-54.601	9	4.478	9	4381.539	13	-578.152	9	38.144	14	19.293	3
478			min	-10.7	9	-608.98	13	-11.696	13	578.152	9	-4381.539	13	-19.293	3	-38.144	14
479		5	max	48.488	14	-62.787	9	4.478	9	3388.181	13	-486.24	9	63.964	9	249.334	13
480			min	-10.7	9	-659.717	13	-21.392	13	486.24	9	-3388.181	13	-249.334	13	-63.964	9
481	M51	1	max	111.183	9	-67.414	9	16.135	14	3383.448	13	-481.853	9	22.556	3	117.068	14
482			min	-111.753	7	-667.502	13	-0.999	7	481.853	9	-3383.448	13	-117.068	14	-22.556	3
483		2	max	111.183	9	-75.6	9	6.439	14	2298.448	13	-369.876	9	79.159	13	21.22	7
484			min	-111.753	7	-718.239	13	-0.999	7	369.876	9	-2298.448	13	-21.22	7	-79.159	13
485		3	max	111.183	9	-83.787	9	0.806	9	1133.996	13	-198.56	6	106.041	13	38.475	7
486			min	-111.753	7	-768.976	13	-3.292	13	198.56	6	-1133.996	13	-38.475	7	-106.041	13
487		4	max	111.183	9	-91.973	9	0.806	9	107.465	9	180.841	8	55.975	9	55.729	7
488			min	-111.753	7	-819.713	13	-12.989	13	-180.841	8	-107.465	9	-55.729	7	-55.975	9
489		5	max	111.183	9	-100.16	9	0.806	9	-42.971	9	1433.262	13	69.899	9	342.687	13
490			min	-111.753	7	-870.45	13	-22.686	13	-1433.262	13	42.971	9	-342.687	13	-69.899	9
491	M52	1	max	239.863	9	-103.22	9	24.354	14	-46.094	9	1430.306	13	35.384	9	262.149	13
492			min	-240.851	7	-877.174	13	-2.588	9	-1430.306	13	46.094	9	-262.149	13	-35.384	9
493		2	max	239.863	9	-111.406	9	14.657	14	-214.141	9	2843.643	13	74.83	14	9.324	9
494			min	-240.851	7	-927.911	13	-2.588	9	-2843.643	13	214.141	9	-9.324	9	-74.83	14
495		3	max	239.863	9	-119.593	9	4.96	14	-395.007	9	4336.431	13	244.261	14	54.033	9
496			min	-240.851	7	-978.648	13	-2.588	9	-4336.431	13	395.007	9	-54.033	9	-244.261	14
497		4	max	239.863	9	-127.779	9	2.516	7	-588.693	9	5908.671	13	246.193	14	98.741	9
498			min	-240.851	7	-1029.385	13	-4.749	13	-5908.671	13	588.693	9	-98.741	9	-246.193	14
499		5	max	239.863	9	-135.966	9	2.516	7	-795.199	9	7560.362	13	138.441	7	143.45	9
500			min	-240.851	7	-1080.122	13	-14.446	13	-7560.362	13	795.199	9	-143.45	9	-138.441	7
501	M53	1	max	128.734	9	-72.707	9	1.335	9	6892.829	13	-1123.979	9	32.471	7	51.258	9
502			min	-137.63	13	-451.969	13	-0.85	7	1123.979	9	-6892.829	13	-51.258	9	-32.471	7
503		2	max	128.734	9	-80.893	9	1.335	9	6145.342	13	-1003.714	9	31.785	14	28.2	9
504			min	-137.63	13	-502.706	13	-0.85	7	1003.714	9	-6145.342	13	-28.2	9	-31.785	14
505		3	max	128.734	9	-89.079	9	1.335	9	5318.405	13	-870.63	9	33.136	14	5.142	9
506			min	-137.63	13	-553.443	13	-0.85	7	870.63	9	-5318.405	13	-5.142	9	-33.136	14
507		4	max	128.734	9	-97.266	9	1.335	9	4412.015	13	-724.726	9	35.643	13	11.558	7
508			min	-137.63	13	-604.18	13	-0.85	7	724.726	9	-4412.015	13	-11.558	7	-35.643	13
509		5	max	128.734	9	-105.452	9	1.335	9	3426.175	13	-566.003	9	40.973	9	26.234	7
510			min	-137.63	13	-654.917	13	-0.85	7	566.003	9	-3426.175	13	-26.234	7	-40.973	9
511	M54	1	max	8.789	9	-109.395	9	2.886	9	3426.35	13	-570.75	9	75.33	7	79.682	9
512			min	-46.956	14	-664.528	13	-2.851	7	570.75	9	-3426.35	13	-79.682	9	-75.33	7
513		2	max	8.789	9	-117.582	9	2.886	9	2346.006	13	-393.032	9	31.916	14	29.839	9
514			min	-46.956	14	-715.265	13	-2.851	7	393.032	9	-2346.006	13	-29.839	9	-31.916	14
515		3	max	8.789	9	-125.768	9	2.886	9	1186.211	13	-202.495	9	20.003	9	23.154	7
516			min	-46.956	14	-766.002	13	-2.851	7	202.495	9	-1186.211	13	-23.154	7	-20.003	9
517		4	max	8.789	9	-133.955	9	2.886	9	-0.862	9	58.331	3	69.846	9	72.396	7
518			min	-46.956	14	-816.739	13	-2.851	7	-58.331	3	0.862	9	-72.396	7	-69.846	9
519		5	max	8.789	9	-142.141	9	2.886	9	-217.038	9	1371.735	13	119.689	9	121.637	7
520			min	-46.956	14	-867.476	13	-2.851	7	-1371.735	13	217.038	9	-121.637	7	-119.689	9
521	M55	1	max	113.116	7	-147.578	9	3.522	14	-213.984	9	1381.871	13	26.859	3	12.64	6
522			min	-112.558	9	-877.241	13	-2.526	9	-1381.871	13	213.984	9	-12.64	6	-26.859	3
523		2	max	113.116	7	-155.764	9	3.522	14	-451.493	9	2795.313	13	60.614	13	18.347	9
524			min	-112.558	9	-927.978	13	-2.526	9	-2795.313	13	451.493	9	-18.347	9	-60.614	13
525		3	max	113.116	7	-163.951	9	3.522	14	-701.822	9	4288.206	13	120.44	14	61.985	9
526			min	-112.558	9	-978.715	13	-2.526	9	-4288.206	13	701.822	9	-61.985	9	-120.44	14
527		4	max	113.116	7	-172.137	9	3.522	14	-964.97	9	5860.551	13	181.27	14	105.622	9
528			min	-112.558	9	-1029.452	13	-2.526	9	-5860.551	13	964.97	9	-105.622	9	-181.27	14
529		5	max	113.116	7	-180.324	9	3.522	14	-1240.938	9	7512.348	13	242.099	14	149.26	9
530			min	-112.558	9	-1080.189	13	-2.526	9	-7512.348	13	1240.938	9	-149.26	9	-242.099	14
531	M56	1	max	197.862	9	14.854	13	9.347	7	27.119	7	27.374	3	477.553	9	171.337	7
532			min	-197.114	7	6.726	6	-9.391	9	-27.374	3	-27.119	7	-471.177	7	-173.655	9

Envelope Member Section Stresses (Continued)

	Member	Sec		Axial[psi]	LC	y Shear[psi]	LC	z Shear[psi]	LC	y-Top[psi]	LC	y-Bot[psi]	LC	z-Top[psi]	LC	z-Bot[psi]	LC
533		2	max	197.862	9	8.755	13	9.347	7	45.633	7	7.489	9	249.404	9	88.762	7
534			min	-197.114	7	3.676	6	-9.391	9	-7.489	9	-45.633	7	-244.095	7	-90.692	9
535		3	max	197.862	9	2.655	13	9.347	7	51.576	7	0.573	9	21.256	9	6.186	7
536			min	-197.114	7	-0.139	7	-9.391	9	-0.573	9	-51.576	7	-17.012	7	-7.73	9
537		4	max	197.862	9	-1.778	9	9.347	7	44.948	7	1.2	9	210.071	7	75.233	9
538			min	-197.114	7	-5.222	7	-9.391	9	-1.2	9	-44.948	7	-206.892	9	-76.389	7
539		5	max	197.862	9	-4.828	9	9.347	7	25.748	7	9.37	9	437.154	7	158.196	9
540			min	-197.114	7	-10.304	7	-9.391	9	-9.37	9	-25.748	7	-435.04	9	-158.965	7
541	M57	1	max	210.6	9	16.235	13	6.78	14	15.659	7	16.218	14	329.533	9	120.222	7
542			min	-209.709	7	3.853	9	-6.754	9	-16.218	14	-15.659	7	-330.612	7	-119.83	9
543		2	max	210.6	9	10.136	13	6.78	14	44.05	7	-3.814	9	165.435	9	60.688	7
544			min	-209.709	7	0.803	9	-6.754	9	3.814	9	-44.05	7	-166.891	7	-60.158	9
545		3	max	210.6	9	4.837	8	6.78	14	59.869	7	-2.028	9	1.758	6	1.633	8
546			min	-209.709	7	-2.247	9	-6.754	9	2.028	9	-59.869	7	-4.49	8	-0.639	6
547		4	max	210.6	9	-0.246	8	6.78	14	63.117	7	7.3	9	164.985	14	59.186	9
548			min	-209.709	7	-5.297	9	-6.754	9	-7.3	9	-63.117	7	-162.76	9	-59.995	14
549		5	max	210.6	9	-5.221	6	6.78	14	53.794	7	24.171	9	329.696	14	118.858	9
550			min	-209.709	7	-9.237	2	-6.754	9	-24.171	9	-53.794	7	-326.858	9	-119.889	14
551	M58	1	max	760.249	7	19.161	2	6.947	13	765.966	13	112.944	7	184.2	3	243.911	7
552			min	-758.879	9	10.011	14	0.885	9	-112.944	7	-765.968	13	-206.346	7	-217.734	3
553		2	max	760.249	7	8.138	2	6.947	13	786.653	13	13.869	7	438.079	13	-78.38	7
554			min	-758.879	9	0.09	14	0.885	9	-13.869	7	-786.654	13	66.309	7	-517.831	13
555		3	max	760.249	7	-0.453	9	6.947	13	687.856	3	19.516	7	492.932	13	-149.488	7
556			min	-758.879	9	-10.716	13	0.885	9	-19.516	7	-687.857	3	126.465	7	-582.67	13
557		4	max	760.249	7	-7.066	9	6.947	13	495.999	3	129.884	7	292.788	13	30.586	7
558			min	-758.879	9	-23.943	13	0.885	9	-129.883	7	-496	3	-25.876	7	-346.089	13
559		5	max	760.249	7	-13.68	9	6.947	13	276.433	9	344.973	7	14.542	9	461.843	7
560			min	-758.879	9	-37.17	13	0.885	9	-344.973	7	-276.434	9	-390.714	7	-17.189	9
561	M59	1	max	773.055	7	17.979	2	8.947	13	403.687	3	195.849	7	57.884	9	442.58	7
562			min	-771.008	9	6.657	14	-0.315	9	-195.848	7	-403.687	3	-374.418	7	-68.422	9
563		2	max	773.055	7	6.957	2	8.947	13	363.908	3	127.406	7	218.872	9	92.006	7
564			min	-771.008	9	-3.263	14	-0.315	9	-127.406	7	-363.908	3	-77.836	7	-258.718	9
565		3	max	773.055	7	-1.255	9	8.947	13	337.207	9	163.684	7	252.362	9	-7.385	7
566			min	-771.008	9	-14.4	13	-0.315	9	-163.684	7	-337.208	9	6.248	7	-298.304	9
567		4	max	773.055	7	-7.868	9	8.947	13	296.858	9	304.685	7	158.352	9	144.406	7
568			min	-771.008	9	-27.627	13	-0.315	9	-304.684	7	-296.858	9	-122.166	7	-187.18	9
569		5	max	773.055	7	-14.482	9	8.947	13	193.675	9	612.894	8	-63.155	9	600.673	8
570			min	-771.008	9	-40.854	13	-0.315	9	-612.893	8	-193.676	9	-508.162	8	74.653	9
571	M60	1	max	1045.047	13	16.084	2	16.83	13	152.855	9	350.796	7	31.049	9	552.993	7
572			min	-818.058	9	-1.986	14	-0.59	9	-350.796	7	-152.855	9	-467.825	7	-36.701	9
573		2	max	1045.047	13	5.061	2	16.83	13	227.264	9	375.812	8	159.3	9	216.788	8
574			min	-818.058	9	-11.906	14	-0.59	9	-375.811	8	-227.265	9	-183.4	8	-188.301	9
575		3	max	1045.047	13	-2.678	9	16.83	13	238.841	9	594.754	8	160.053	9	213.781	8
576			min	-818.058	9	-23.595	13	-0.59	9	-594.752	8	-238.841	9	-180.857	8	-189.191	9
577		4	max	1045.047	13	-9.291	9	16.83	13	187.585	9	998.242	13	33.308	9	461.958	8
578			min	-818.058	9	-36.822	13	-0.59	9	-998.24	13	-187.585	9	-390.811	8	-39.372	9
579		5	max	1045.047	13	-15.905	9	16.83	13	73.496	9	1570.813	13	-216.835	6	1032.719	13
580			min	-818.058	9	-50.05	13	-0.59	9	-1570.811	13	-73.496	9	-873.669	13	256.31	6

Envelope AISC 15TH (360-16): ASD Member Steel Code Checks

	Member	Shape	Code Check	Loc[ft]	LC	Shear Check	Loc[ft]	Dir	LC	Pnc/om [lb]	Pnt/om [lb]	Mnyy/om [lb-ft]	Mnzz/om [lb-ft]	Cb	Eqn
1	M1	W14X22	0.142	4.813	13	0.041	0	y	13	142394.733	194311.377	10953.094	82834.331	1.601	H1-1b
2	M2	W14X22	0.234	4.813	13	0.03	0	y	13	142394.733	194311.377	10953.094	82834.331	1.178	H1-1b
3	M3	W14X22	0.287	4.813	13	0.02	0	y	13	142394.733	194311.377	10953.094	82834.331	1.07	H1-1b
4	M4	W14X22	0.317	4.75	13	0.009	0	y	13	143102.509	194311.377	10953.094	78450.565	1.01	H1-1b
5	M5	W14X22	0.311	0	13	0.012	4.813	y	13	142394.733	194311.377	10953.094	79213.256	1.023	H1-1b
6	M6	W14X22	0.272	0	13	0.022	4.813	y	13	142394.733	194311.377	10953.094	82834.331	1.091	H1-1b
7	M8	W14X22	0.134	4.813	13	0.04	0	y	13	142394.733	194311.377	10953.094	82834.331	1.601	H1-1b
8	M9	W14X22	0.227	4.813	13	0.03	0	y	13	142394.733	194311.377	10953.094	82834.331	1.177	H1-1b

Envelope AISC 15TH (360-16): ASD Member Steel Code Checks (Continued)

	Member	Shape	Code Check	Loc[ft]	LC	Shear Check	Loc[ft]	Dir	LC	Pnc/om [lb]	Pnt/om [lb]	Mnyy/om [lb-ft]	Mnzz/om [lb-ft]	Cb	Eqn
9	M10	W14X22	0.28	4.813	13	0.019	0	y	13	142394.733	194311.377	10953.094	82786.257	1.07	H1-1b
10	M11	W14X22	0.31	4.602	13	0.009	0	y	13	143102.509	194311.377	10953.094	78430.282	1.009	H1-1b
11	M12	W14X22	0.306	0	13	0.012	4.813	y	13	142394.733	194311.377	10953.094	79188.526	1.023	H1-1b
12	M13	W14X22	0.269	0	13	0.022	4.813	y	13	142394.733	194311.377	10953.094	82834.331	1.09	H1-1b
13	M15	W8X24	0.479	2	13	0.102	2	y	13	208550.121	211976.048	21382.236	57634.731	1.135	H1-1b
14	M16	W8X24	0.628	0	13	0.206	0.917	y	13	208550.121	211976.048	21382.236	57634.731	1.274	H1-1b
15	M17	W8X24	0.291	0	13	0.161	0.813	y	13	208550.121	211976.048	21382.236	57634.731	1.622	H1-1b
16	M18	W8X24	0.079	0	13	0.035	1	z	13	208550.121	211976.048	21382.236	57634.731	2.03	H1-1b
17	M19	W8X24	0.477	2	13	0.102	2	y	13	208550.121	211976.048	21382.236	57634.731	1.135	H1-1b
18	M20	W8X24	0.626	0	13	0.205	0.917	y	13	208550.121	211976.048	21382.236	57634.731	1.274	H1-1b
19	M21	W8X24	0.293	0	13	0.161	0.813	y	13	208550.121	211976.048	21382.236	57634.731	1.621	H1-1b
20	M22	W8X24	0.08	0	13	0.035	1	z	13	208550.121	211976.048	21382.236	57634.731	2.024	H1-1b
21	M23	C6X8.2	0.02	0	9	0.008	1.406	y	7	40635.154	51520.958	1402.422	9269.461	2.077	H1-1b
22	M24	C6X8.2	0.019	3	7	0.007	1.5	z	7	40635.154	51520.958	1402.422	9269.461	3	H1-1b
23	M25	C6X8.2	0.019	3	7	0.006	1.5	z	7	40635.154	51520.958	1402.422	9269.461	3	H1-1b
24	M26	C6X8.2	0.015	3	7	0.004	1.688	y	7	40635.154	51520.958	1402.422	9269.461	2.827	H1-1b
25	M27	C6X8.2	0.044	0	7	0.003	1.5	z	9	40635.154	51520.958	1402.422	9269.461	2.005	H1-1b
26	M28	C6X8.2	0.046	0	9	0.004	1.5	z	7	40635.154	51520.958	1402.422	9269.461	1.828	H1-1b
27	M29	C6X8.2	0.02	3	9	0.005	1.5	z	7	40635.154	51520.958	1402.422	9269.461	2.68	H1-1b
28	M30	C6X8.2	0.136	2.5	13	0.081	1.276	y	13	43691.725	51520.958	1402.422	9269.461	1.792	H1-1b
29	M31	C6X8.2	0.058	0	13	0.006	1.344	y	9	40635.154	51520.958	1402.422	9269.461	1.117	H1-1b
30	M32	C6X8.2	0.14	0	13	0.081	1.224	y	13	43691.725	51520.958	1402.422	9269.461	1.79	H1-1b
31	M33	C6X8.2	0.112	4	13	0.036	2.708	y	13	33785.239	51520.958	1402.422	9269.461	2.626	H1-1b
32	M34	C6X8.2	0.113	0	13	0.038	1.375	y	13	33785.239	51520.958	1402.422	9269.461	2.493	H1-1b
33	M35	C6X8.2	0.096	4	13	0.038	2.625	y	13	33785.239	51520.958	1402.422	9269.461	2.504	H1-1b
34	M36	C6X8.2	0.095	0	13	0.035	1.292	y	13	33785.239	51520.958	1402.422	9269.461	2.639	H1-1b
35	M37	C6X8.2	0.062	2.5	13	0.028	1.328	y	13	43691.725	51520.958	1402.422	9269.461	1.805	H1-1b
36	M38	C6X8.2	0.075	3	13	0.003	0	y	7	40635.154	51520.958	1402.422	9182.523	1.031	H1-1b
37	M39	C6X8.2	0.059	0	13	0.028	1.172	y	13	43691.725	51520.958	1402.422	9269.461	1.807	H1-1b
38	M40	C6X8.2	0.211	0	13	0.058	1.172	y	13	43691.725	51520.958	1402.422	9269.461	1.692	H1-1b
39	M41	C6X8.2	0.209	2.5	13	0.057	1.328	y	13	43691.725	51520.958	1402.422	9269.461	1.692	H1-1b
40	M42	W8X24	0.039	3	13	0.004	1.5	z	9	204345.471	211976.048	21382.236	57634.731	1.029	H1-1b
41	M43	L2.5X2.5X4	0.107	3	13	0.002	3	z	7	19124.611	25652.695	740.888	1630.107	1.068	H2-1
42	M44	L2.5X2.5X4	0.088	0	9	0.004	0	y	13	8973.074	25652.695	740.888	1518.564	1.379	H2-1
43	M45	L2.5X2.5X4	0.084	0	9	0.005	0	y	13	8973.074	25652.695	740.888	1545.07	1.5	H2-1
44	M46	L2.5X2.5X4	0.084	3.131	8	0.006	0	y	13	8973.074	25652.695	740.888	1419.028	1.034	H2-1
45	M47	L2.5X2.5X4	0.087	2.575	8	0.007	0	y	13	9142.985	25652.695	740.888	1422.954	1.035	H2-1
46	M48	L2.5X2.5X4	0.097	2.599	13	0.007	5.671	y	13	8973.074	25652.695	740.888	1418.151	1.031	H2-1
47	M49	L2.5X2.5X4	0.152	0	7	0.006	5.671	y	13	8973.074	25652.695	740.888	1545.07	1.5	H2-1
48	M50	W14X22	0.207	0	13	0.033	4.813	y	13	142394.733	194311.377	10953.094	82834.331	1.231	H1-1b
49	M51	W14X22	0.104	0	13	0.044	4.813	y	13	142394.733	194311.377	10953.094	82834.331	2.092	H1-1b
50	M52	W14X22	0.229	4.813	13	0.054	4.813	y	13	142394.733	194311.377	10953.094	82834.331	1.512	H1-1b
51	M53	W14X22	0.206	0	13	0.033	4.813	y	13	142394.733	194311.377	10953.094	82834.331	1.228	H1-1b
52	M54	W14X22	0.104	0	13	0.043	4.813	y	13	142394.733	194311.377	10953.094	82834.331	2.088	H1-1b
53	M55	W14X22	0.23	4.813	13	0.054	4.813	y	13	142394.733	194311.377	10953.094	82834.331	1.517	H1-1b
54	M56	C6X8.2	0.026	0	9	0.006	1.5	z	7	40635.154	51520.958	1402.422	9269.461	3	H1-1b
55	M57	C6X8.2	0.022	3	9	0.006	1.5	z	7	40635.154	51520.958	1402.422	9269.461	2.966	H1-1b
56	M58	L2.5X2.5X4	0.127	5.671	7	0.005	5.671	y	13	8973.074	25652.695	740.888	1545.07	1.5	H2-1
57	M59	L2.5X2.5X4	0.139	5.671	7	0.003	5.671	y	8	8973.074	25652.695	740.888	1545.07	1.5	H2-1
58	M60	L2.5X2.5X4	0.226	5.671	13	0.005	5.671	y	13	8973.074	25652.695	740.888	1545.07	1.5	H2-1

Larson Engineering, Inc.
1488 Bond Street, Suite 100
Naperville, IL 60563-6503
630.357.0540   Fax: 630.357.0164
www.larsonengr.com

Larson

Clarifiers Walkway, Scum Box, Drive Shaft, and Rake Arms
Cottage Grove, OR

Scum Box

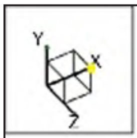

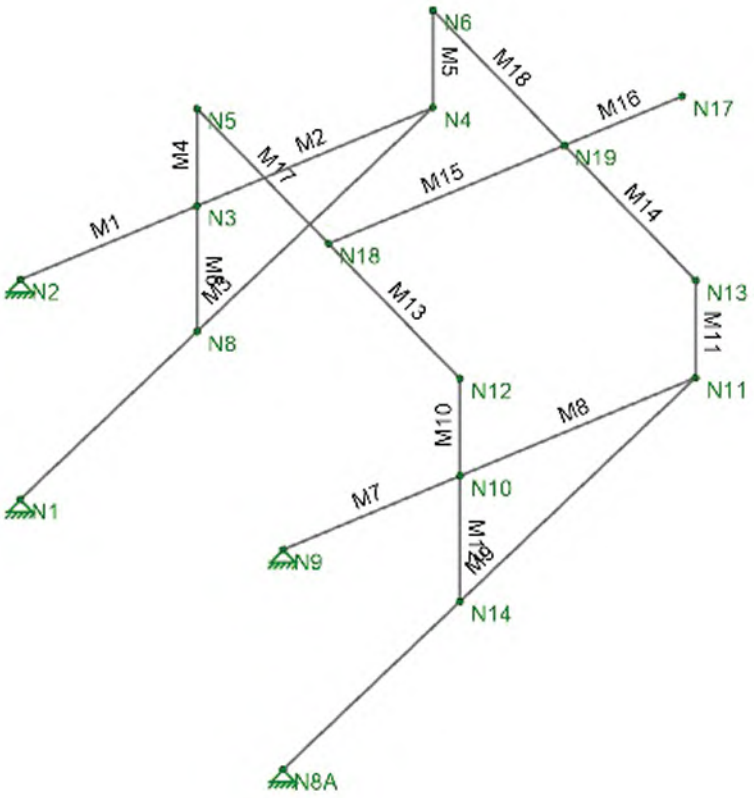

LEI	COTTAGE GROVE OR	SK-1
JF		Aug 22, 2022
21220680.000	Node and Member Labels	COTTAGE GROVE Scumbox.r3d

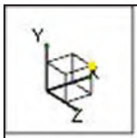

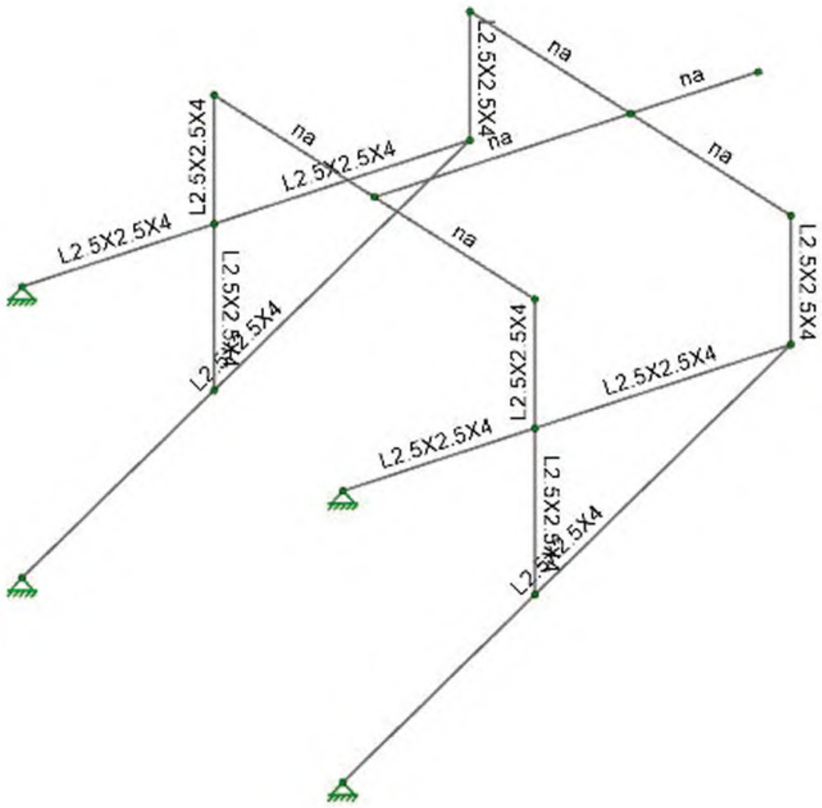

LEI	COTTAGE GROVE OR	
JF		Aug 23, 2022
21220680.000	Member Shapes	COTTAGE GROVE Scumbox.r3d

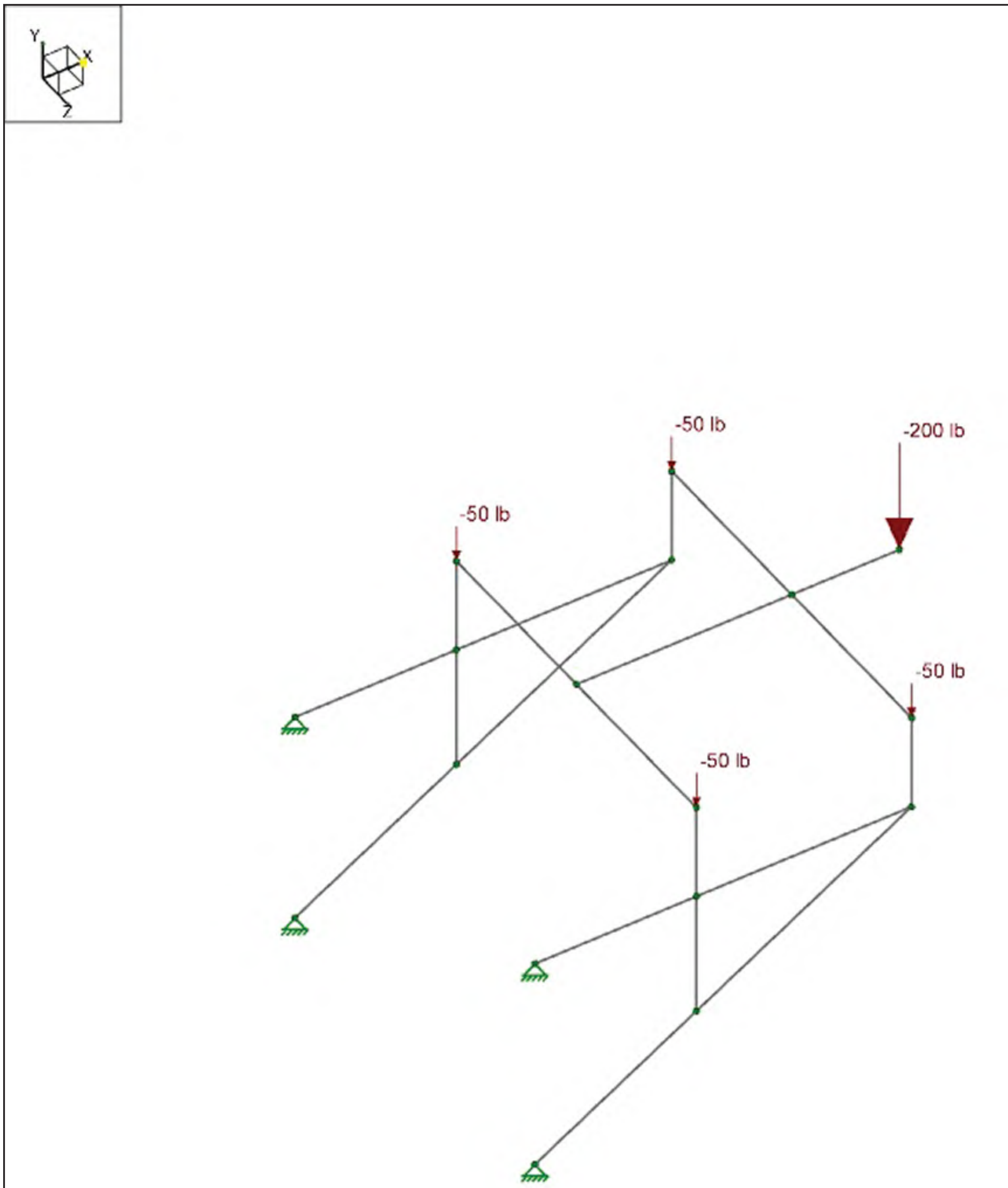

Loads: BLC 1, DL

LEI	COTTAGE GROVE OR	SK-2
JF		Aug 22, 2022
21220680.000	BLC 1 - Dead Load and 200 lb Live Load	COTTAGE GROVE Scumbox.r3d

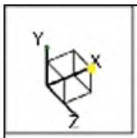

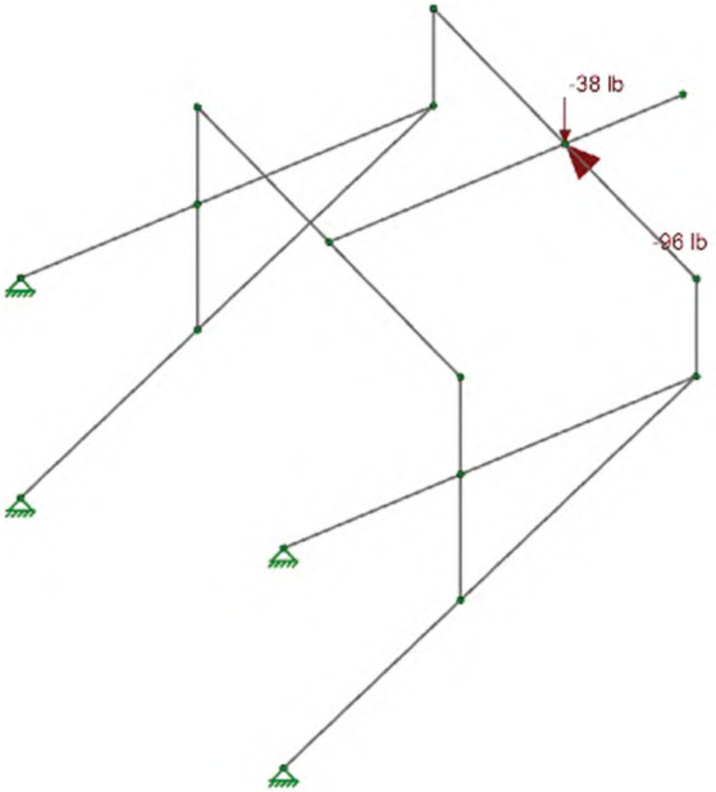

Loads: BLC 2, EL

LEI	COTTAGE GROVE OR	SK-3
JF		Aug 22, 2022
21220680.000	BLC 2 - Earthquake Load	COTTAGE GROVE Scumbox.r3d

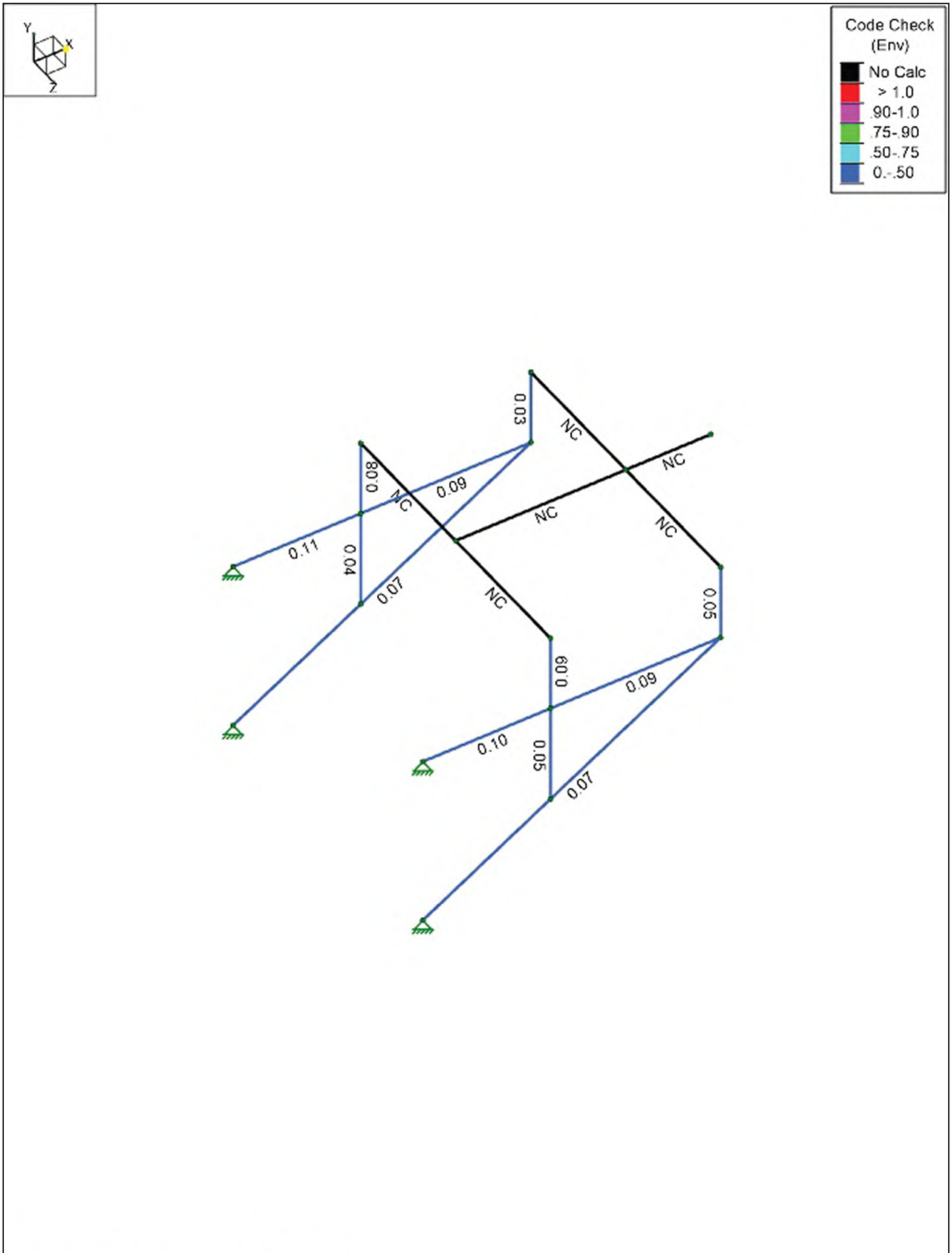

Member Code Checks Displayed (Enveloped)
Envelope Only Solution

LEI	COTTAGE GROVE OR	SK-4
JF		Aug 22, 2022
21220680.000	Envelope Member Unity (Allowable Design)	COTTAGE GROVE Scumbox.r3d

Hot Rolled Steel Properties

	Label	E [psi]	G [psi]	Nu	Therm. Coeff. [1e^5°F^{-1}]	Density [lb/ft^3]	Yield [psi]	Ry	Fu [psi]	Rt
1	A992	2.9e+7	1.115e+7	0.3	0.65	490	50000	1.1	65000	1.1
2	A36 Gr.36	2.9e+7	1.115e+7	0.3	0.65	490	36000	1.5	58000	1.2
3	A572 Gr.50	2.9e+7	1.115e+7	0.3	0.65	490	50000	1.1	65000	1.1
4	A500 Gr.B RND	2.9e+7	1.115e+7	0.3	0.65	527	42000	1.4	58000	1.3
5	A500 Gr.B Rect	2.9e+7	1.115e+7	0.3	0.65	527	46000	1.4	58000	1.3
6	A53 Gr.B	2.9e+7	1.115e+7	0.3	0.65	490	35000	1.6	60000	1.2
7	A1085	2.9e+7	1.115e+7	0.3	0.65	490	50000	1.4	65000	1.3
8	304SS	2.9e+7	1.115e+7	0.3	0.65	499	30000	1.5	58000	1.2

Hot Rolled Steel Section Sets

	Label	Shape	Type	Design List	Material	Design Rule	Area [in^2]	Iyy [in^4]	Izz [in^4]	J [in^4]
1	SB Horizontal	L2.5X2.5X4	Beam	Single Angle	A36 Gr.36	Typical	1.19	0.692	0.692	0.026
2	SB Diagonal	L2.5X2.5X4	Beam	Single Angle	A36 Gr.36	Typical	1.19	0.692	0.692	0.026
3	SB vertical	L2.5X2.5X4	Column	Wide Flange	A36 Gr.36	Typical	1.19	0.692	0.692	0.026

Node Coordinates

	Label	X [ft]	Y [ft]	Z [ft]	Detach From Diaphragm
1	N1	0	0	0	
2	N2	0	2.08	0	
3	N3	1.5	2.08	0	
4	N4	3.5	2.08	0	
5	N5	1.5	3	0	
6	N6	3.5	3	0	
7	N8	1.5	0.891429	0	
8	N8A	0	0	3.5	
9	N9	0	2.08	3.5	
10	N10	1.5	2.08	3.5	
11	N11	3.5	2.08	3.5	
12	N12	1.5	3	3.5	
13	N13	3.5	3	3.5	
14	N14	1.5	0.891429	3.5	
15	N17	4.5	3	1.75	
16	N18	1.5	3	1.75	
17	N19	3.5	3	1.75	

Node Boundary Conditions

	Node Label	X [lb/in]	Y [lb/in]	Z [lb/in]
1	N2	Reaction	Reaction	Reaction
2	N1	Reaction	Reaction	Reaction
3	N8A	Reaction	Reaction	Reaction
4	N9	Reaction	Reaction	Reaction

Member Primary Data

	Label	I Node	J Node	Section/Shape	Type	Design List	Material	Design Rule
1	M1	N2	N3	SB Horizontal	Beam	Single Angle	A36 Gr.36	Typical
2	M2	N3	N4	SB Horizontal	Beam	Single Angle	A36 Gr.36	Typical
3	M3	N1	N4	SB Diagonal	Beam	Single Angle	A36 Gr.36	Typical
4	M4	N3	N5	SB vertical	Column	Wide Flange	A36 Gr.36	Typical
5	M5	N6	N4	SB vertical	Column	Wide Flange	A36 Gr.36	Typical
6	M6	N3	N8	SB vertical	Column	Wide Flange	A36 Gr.36	Typical
7	M7	N9	N10	SB Horizontal	Beam	Single Angle	A36 Gr.36	Typical
8	M8	N10	N11	SB Horizontal	Beam	Single Angle	A36 Gr.36	Typical
9	M9	N8A	N11	SB Diagonal	Beam	Single Angle	A36 Gr.36	Typical
10	M10	N10	N12	SB vertical	Column	Wide Flange	A36 Gr.36	Typical

Member Primary Data (Continued)

	Label	I Node	J Node	Section/Shape	Type	Design List	Material	Design Rule
11	M11	N13	N11	SB vertical	Column	Wide Flange	A36 Gr.36	Typical
12	M12	N10	N14	SB vertical	Column	Wide Flange	A36 Gr.36	Typical
13	M13	N12	N18	RIGID	None	None	RIGID	Typical
14	M14	N13	N19	RIGID	None	None	RIGID	Typical
15	M15	N18	N19	RIGID	None	None	RIGID	Typical
16	M16	N19	N17	RIGID	None	None	RIGID	Typical
17	M17	N18	N5	RIGID	None	None	RIGID	Typical
18	M18	N19	N6	RIGID	None	None	RIGID	Typical

Hot Rolled Steel Design Parameters

	Label	Shape	Length [ft]	Lcomp top [ft]	Channel Conn.	a [ft]	Function
1	M1	SB Horizontal	1.5	Lbyy	N/A	N/A	Lateral
2	M2	SB Horizontal	2	Lbyy	N/A	N/A	Lateral
3	M3	SB Diagonal	4.071	Lbyy	N/A	N/A	Lateral
4	M4	SB vertical	0.92	Lbyy	N/A	N/A	Lateral
5	M5	SB vertical	0.92	Lbyy	N/A	N/A	Lateral
6	M6	SB vertical	1.189	Lbyy	N/A	N/A	Lateral
7	M7	SB Horizontal	1.5	Lbyy	N/A	N/A	Lateral
8	M8	SB Horizontal	2	Lbyy	N/A	N/A	Lateral
9	M9	SB Diagonal	4.071	Lbyy	N/A	N/A	Lateral
10	M10	SB vertical	0.92	Lbyy	N/A	N/A	Lateral
11	M11	SB vertical	0.92	Lbyy	N/A	N/A	Lateral
12	M12	SB vertical	1.189	Lbyy	N/A	N/A	Lateral

Node Loads and Enforced Displacements (BLC 1 : DL)

	Node Label	L, D, M	Direction	Magnitude [(lb, lb-ft), (in, rad), (lb*s²/ft, lb*s²*ft)]
1	N17	L	Y	-200
2	N12	L	Y	-50
3	N5	L	Y	-50
4	N13	L	Y	-50
5	N6	L	Y	-50

Node Loads and Enforced Displacements (BLC 2 : EL)

	Node Label	L, D, M	Direction	Magnitude [(lb, lb-ft), (in, rad), (lb*s²/ft, lb*s²*ft)]
1	N19	L	Y	-38
2	N19	L	Z	-96

Member Point Loads

No Data to Print...

Basic Load Cases

	BLC Description	Category	Y Gravity	Nodal
1	DL	DL	-1	5
2	EL	EL		2

Load Combinations

	Description	Solve	P-Delta	BLC	Factor	BLC	Factor
1	Allowable Cases						
2	(1) DL	Yes	Y	DL	1		
3	(2) DL+EL	Yes	Y	DL	1	EL	1
4	(8) DL + .7 EL	Yes	Y	DL	1	EL	0.7
5	(10) .6 DL - .7 EL	Yes	Y	DL	0.6	EL	-0.7
6	Ultimate						

Load Combinations (Continued)

	Description	Solve	P-Delta	BLC	Factor	BLC	Factor
7	(1) 1.4 DL		Y	DL	1.4		
8	(6) 1.2 DL+ EL*1.25 Overstrength		Y	DL	1.2	EL	1.25
9	(7) .9 DL + EL *1.25 OverStrength		Y	DL	0.9	EL	1.25
10	Individual						
11	EL		Y	EL	1		
12							
13							
14							
15							

Envelope Node Reactions

	Node Label		X [lb]	LC	Y [lb]	LC	Z [lb]	LC	MX [lb-ft]	LC	MY [lb-ft]	LC	MZ [lb-ft]	LC
1	N2	max	-237.045	5	11.412	5	47.035	3	0	5	0	5	0	5
2		min	-373.713	2	1.889	3	-32.066	5	0	2	0	2	0	2
3	N1	max	451.421	3	288.709	3	3.345	3	0	5	0	5	0	5
4		min	169.839	5	100.018	5	-3.309	5	0	2	0	2	0	2
5	N8A	max	375.823	2	237.184	3	1.776	3	0	5	0	5	0	5
6		min	235.121	5	137.85	5	-2.134	5	0	2	0	2	0	2
7	N9	max	-167.915	5	15.626	5	43.843	3	0	5	0	5	0	5
8		min	-458.031	3	-3.937	3	-29.69	5	0	2	0	2	0	2
9	Totals:	max	0	5	523.845	3	96	3						
10		min	0	3	264.907	5	-67.2	5						

Envelope Node Displacements

	Node Label		X [in]	LC	Y [in]	LC	Z [in]	LC	X Rotation [rad]	LC	Y Rotation [rad]	LC	Z Rotation [rad]	LC
1	N1	max	0	5	0	5	0	5	2.479e-4	5	6.21e-4	3	6.257e-5	5
2		min	0	3	0	3	0	3	-4.049e-4	3	-3.585e-4	5	-3.549e-4	3
3	N2	max	0	2	0	3	0	5	2.304e-4	5	1.242e-3	3	7.929e-5	5
4		min	0	5	0	5	0	3	-3.011e-4	3	-7.679e-4	5	-3.86e-4	3
5	N3	max	0	2	0.001	5	0.012	5	2.304e-4	5	5.111e-4	3	5.e-5	3
6		min	0	5	-0.004	3	-0.018	3	-3.011e-4	3	-3.624e-4	5	-6.116e-5	5
7	N4	max	0.001	3	-0.001	5	0.014	5	-5.488e-6	5	4.642e-5	3	1.339e-4	3
8		min	0	5	-0.003	3	-0.022	3	-1.952e-5	3	-5.581e-5	5	-9.577e-5	5
9	N5	max	0.001	5	0.001	5	0.013	5	5.755e-6	5	4.109e-5	3	6.39e-5	3
10		min	-0.001	3	-0.004	3	-0.02	3	-7.619e-6	3	-2.871e-5	5	-7.658e-5	5
11	N6	max	0.001	5	-0.001	5	0.014	5	5.755e-6	5	4.109e-5	3	6.39e-5	3
12		min	-0.001	3	-0.003	3	-0.021	3	-7.619e-6	3	-2.871e-5	5	-7.658e-5	5
13	N8	max	0.002	3	0.001	5	0.008	5	1.972e-4	5	3.761e-4	3	3.11e-5	3
14		min	-0.001	5	-0.004	3	-0.013	3	-2.593e-4	3	-2.732e-4	5	-2.447e-5	5
15	N8A	max	0	5	0	5	0	5	2.395e-4	5	6.099e-4	3	5.1e-5	5
16		min	0	2	0	3	0	3	-3.933e-4	3	-3.511e-4	5	-3.403e-4	3
17	N9	max	0	3	0	3	0	5	2.092e-4	5	1.183e-3	3	3.678e-5	5
18		min	0	5	0	5	0	3	-2.711e-4	3	-7.269e-4	5	-3.273e-4	3
19	N10	max	0	3	0	5	0.011	5	2.092e-4	5	5.607e-4	3	-1.53e-5	3
20		min	0	5	-0.004	3	-0.018	3	-2.711e-4	3	-3.976e-4	5	-2.018e-5	2
21	N11	max	0.001	3	-0.001	5	0.015	5	2.136e-5	3	1.774e-4	3	2.743e-5	3
22		min	0	5	-0.002	2	-0.022	3	-3.472e-5	5	-1.475e-4	5	-2.112e-5	5
23	N12	max	0.001	3	0	5	0.013	5	5.755e-6	5	4.109e-5	3	6.39e-5	3
24		min	0	5	-0.004	3	-0.02	3	-7.619e-6	3	-2.871e-5	5	-7.658e-5	5
25	N13	max	0.001	3	-0.001	5	0.014	5	5.755e-6	5	4.109e-5	3	6.39e-5	3
26		min	0	5	-0.002	2	-0.021	3	-7.619e-6	3	-2.871e-5	5	-7.658e-5	5
27	N14	max	0.002	3	0	5	0.008	5	1.957e-4	5	3.813e-4	3	5.226e-5	3
28		min	0	5	-0.004	3	-0.013	3	-2.574e-4	3	-2.775e-4	5	-3.922e-5	5
29	N17	max	0.001	5	-0.002	3	0.014	5	5.755e-6	5	4.109e-5	3	6.39e-5	3
30		min	0	3	-0.003	2	-0.022	3	-7.619e-6	3	-2.871e-5	5	-7.658e-5	5
31	N18	max	0.001	5	0	5	0.013	5	5.755e-6	5	4.109e-5	3	6.39e-5	3
32		min	0	3	-0.004	3	-0.02	3	-7.619e-6	3	-2.871e-5	5	-7.658e-5	5
33	N19	max	0.001	5	-0.001	5	0.014	5	5.755e-6	5	4.109e-5	3	6.39e-5	3

Envelope Node Displacements (Continued)

	Node Label		X [in]	LC	Y [in]	LC	Z [in]	LC	X Rotation [rad]	LC	Y Rotation [rad]	LC	Z Rotation [rad]	LC
34		min	0	3	-0.003	3	-0.021	3	-7.619e-6	3	-2.871e-5	5	-7.658e-5	5

Envelope Member Section Stresses

	Member	Sec		Axial[psi]	LC	y Shear[psi]	LC	z Shear[psi]	LC	y-Top[psi]	LC	y-Bot[psi]	LC	z-Top[psi]	LC	z-Bot[psi]	LC
1	M1	1	max	-199.197	5	21.935	5	89.21	3	0	5	0	5	0	5	0	5
2			min	-314.044	2	3.368	3	-61.101	5	0	2	0	2	0	2	0	2
3		2	max	-199.197	5	20.186	5	89.21	3	206.469	5	219.384	3	464.64	3	241.347	5
4			min	-314.044	2	0.452	3	-61.101	5	-219.383	3	-206.469	5	-204.177	5	-549.227	3
5		3	max	-199.197	5	18.436	5	89.21	3	408.542	5	446.094	3	914.412	3	493.238	5
6			min	-314.044	2	-2.463	3	-61.101	5	-446.093	3	-408.543	5	-417.274	5	-1080.88	3
7		4	max	-199.197	5	16.687	5	89.21	3	606.219	5	680.131	3	1349.318	3	755.673	5
8			min	-314.044	2	-5.379	3	-61.101	5	-680.129	3	-606.221	5	-639.29	5	-1594.961	3
9		5	max	-199.197	5	14.938	5	89.21	3	799.501	5	921.494	3	1769.357	3	1028.652	5
10			min	-314.044	2	-8.294	3	-61.101	5	-921.492	3	-799.502	5	-870.228	5	-2091.467	3
11	M2	1	max	-154.435	5	67.594	3	59.358	5	938.437	5	1438.703	3	653.925	3	640.769	5
12			min	-312.009	3	-30.974	5	-87.044	3	-1438.7	3	-938.438	5	-542.083	5	-772.971	3
13		2	max	-154.435	5	63.707	3	59.358	5	631.861	5	927.079	3	508.474	3	422.032	5
14			min	-312.009	3	-33.306	5	-87.044	3	-927.077	3	-631.863	5	-357.034	5	-601.042	3
15		3	max	-154.435	5	59.82	3	59.358	5	317.471	5	428.48	3	336.594	3	222.04	5
16			min	-312.009	3	-35.639	5	-87.044	3	-428.479	3	-317.472	5	-187.843	5	-397.871	3
17		4	max	-154.435	5	55.932	3	59.358	5	57.094	3	4.734	5	138.284	3	40.792	5
18			min	-312.009	3	-37.971	5	-87.044	3	-4.734	5	-57.094	3	-34.51	5	-163.458	3
19		5	max	-154.435	5	52.045	3	59.358	5	529.641	3	334.755	5	102.965	5	102.196	3
20			min	-312.009	3	-40.304	5	-87.044	3	-334.754	5	-529.642	3	-86.456	3	-121.71	5
21	M3	1	max	450.051	3	34.099	3	7.48	3	0	5	0	5	0	5	0	5
22			min	165.63	5	-1.532	5	-6.597	5	0	2	0	2	0	2	0	2
23		2	max	448.282	3	27.296	3	7.48	3	158.367	3	-20.631	5	528.401	3	166.378	5
24			min	164.569	5	-5.613	5	-6.597	5	20.631	5	-158.368	3	-140.754	5	-624.596	3
25		3	max	391.483	3	12.04	5	15.53	3	107.513	5	171.162	3	145.418	3	212.453	5
26			min	172.14	5	-1.713	3	-9.345	5	-171.161	3	-107.513	5	-179.733	5	-171.891	3
27		4	max	389.714	3	7.958	5	15.53	3	239.458	5	311.971	3	289.574	3	201.753	5
28			min	171.079	5	-8.516	3	-9.345	5	-311.97	3	-239.459	5	-170.681	5	-342.291	3
29		5	max	387.944	3	3.877	5	15.53	3	343.563	5	499.181	3	339.574	3	257.831	5
30			min	170.017	5	-15.318	3	-9.345	5	-499.18	3	-343.563	5	-218.122	5	-401.393	3
31	M4	1	max	5.075	5	108.16	5	168.49	3	214.516	3	175.077	5	131.64	3	285.915	5
32			min	-0.824	3	-127.421	3	-118.001	5	-175.077	5	-214.516	3	-241.881	5	-155.605	3
33		2	max	4.606	5	108.16	5	168.49	3	173.503	5	241.569	3	260.081	3	322.293	5
34			min	-1.606	3	-127.421	3	-118.001	5	-241.569	3	-173.503	5	-272.656	5	-307.428	3
35		3	max	4.136	5	108.16	5	168.49	3	522.083	5	697.654	3	388.522	3	358.671	5
36			min	-2.389	3	-127.421	3	-118.001	5	-697.653	3	-522.084	5	-303.432	5	-459.252	3
37		4	max	3.666	5	108.16	5	168.49	3	870.663	5	1153.739	3	516.963	3	395.049	5
38			min	-3.172	3	-127.421	3	-118.001	5	-1153.737	3	-870.664	5	-334.207	5	-611.076	3
39		5	max	3.197	5	108.16	5	168.49	3	1219.243	5	1609.824	3	645.405	3	431.427	5
40			min	-3.954	3	-127.421	3	-118.001	5	-1609.821	3	-1219.245	5	-364.982	5	-762.9	3
41	M5	1	max	212.085	3	56.953	3	50.084	5	294.744	5	541.721	3	-10.811	3	203.93	5
42			min	68.801	5	-20.897	5	-71.771	3	-541.72	3	-294.744	5	-172.522	5	12.779	3
43		2	max	212.867	3	56.953	3	50.084	5	185.342	5	343.32	3	-57.154	3	110.658	2
44			min	69.27	5	-20.897	5	-71.771	3	-343.319	3	-185.342	5	-93.616	2	67.559	3
45		3	max	213.65	3	56.953	3	50.084	5	75.94	5	144.919	3	10.044	5	122.338	3
46			min	69.74	5	-20.897	5	-71.771	3	-144.919	3	-75.94	5	-103.496	3	-11.873	5
47		4	max	214.433	3	56.953	3	50.084	5	53.482	3	33.463	5	101.328	5	177.117	3
48			min	70.209	5	-20.897	5	-71.771	3	-33.462	5	-53.482	3	-149.839	3	-119.774	5
49		5	max	215.215	3	56.953	3	50.084	5	251.883	3	142.865	5	192.611	5	231.896	3
50			min	70.679	5	-20.897	5	-71.771	3	-142.865	5	-251.884	3	-196.182	3	-227.676	5
51	M6	1	max	32.243	3	97.001	3	2.873	5	28.055	5	464.919	3	-44.001	5	773.782	3
52			min	-14.99	5	-5.885	5	-8.652	3	-464.918	3	-28.055	5	-654.611	3	52.011	5
53		2	max	33.254	3	97.001	3	2.873	5	10.616	5	254.541	3	-56.168	5	351.819	3
54			min	-14.384	5	-5.885	5	-8.652	3	-254.54	3	-10.616	5	-297.635	3	66.394	5
55		3	max	34.266	3	97.001	3	2.873	5	-6.824	5	44.162	3	59.342	3	80.776	5

Envelope Member Section Stresses (Continued)

	Member	Sec		Axial[psi]	LC	y Shear[psi]	LC	z Shear[psi]	LC	y-Top[psi]	LC	y-Bot[psi]	LC	z-Top[psi]	LC	z-Bot[psi]	LC
56			min	-13.777	5	-5.885	5	-8.652	3	-44.162	3	6.824	5	-68.336	5	-70.145	3
57		4	max	35.277	3	97.001	3	2.873	5	166.216	3	24.264	5	416.318	3	95.159	5
58			min	-13.17	5	-5.885	5	-8.652	3	-24.264	5	-166.216	3	-80.504	5	-492.108	3
59		5	max	36.288	3	97.001	3	2.873	5	376.593	3	41.704	5	773.294	3	109.542	5
60			min	-12.564	5	-5.885	5	-8.652	3	-41.704	5	-376.594	3	-92.671	5	-914.072	3
61	M7	1	max	-141.105	5	30.012	5	82.798	3	0	5	0	5	0	5	0	5
62			min	-384.9	3	-7.868	3	-56.684	5	0	2	0	2	0	2	0	2
63		2	max	-141.105	5	28.263	5	82.798	3	215.667	5	231.506	3	374.652	3	166.037	5
64			min	-384.9	3	-10.784	3	-56.684	5	-231.506	3	-215.667	5	-140.466	5	-442.857	3
65		3	max	-141.105	5	26.513	5	82.798	3	426.938	5	470.339	3	734.436	3	342.619	5
66			min	-384.9	3	-13.699	3	-56.684	5	-470.338	3	-426.939	5	-289.852	5	-868.14	3
67		4	max	-141.105	5	24.764	5	82.798	3	633.813	5	716.498	3	1079.354	3	529.744	5
68			min	-384.9	3	-16.615	3	-56.684	5	-716.497	3	-633.815	5	-448.158	5	-1275.85	3
69		5	max	-141.105	5	23.015	5	82.798	3	836.293	5	969.984	3	1409.405	3	727.414	5
70			min	-384.9	3	-19.53	3	-56.684	5	-969.982	3	-836.294	5	-615.384	5	-1665.986	3
71	M8	1	max	-162.622	5	32.053	3	56.67	5	722.161	5	1128.182	3	1012.834	3	938.529	5
72			min	-303.298	3	-6.106	5	-83.134	3	-1128.18	3	-722.162	5	-793.985	5	-1197.219	3
73		2	max	-162.622	5	28.166	3	56.67	5	507.912	5	748.744	3	652.318	3	541.535	5
74			min	-303.298	3	-8.439	5	-83.134	3	-748.743	3	-507.913	5	-458.132	5	-771.073	3
75		3	max	-162.622	5	24.278	3	56.67	5	285.848	5	382.331	3	265.374	3	163.285	5
76			min	-303.298	3	-10.771	5	-83.134	3	-382.331	3	-285.848	5	-138.137	5	-313.685	3
77		4	max	-162.622	5	20.391	3	56.67	5	55.969	5	28.944	3	165.999	5	174.945	3
78			min	-303.298	3	-13.104	5	-83.134	3	-28.944	3	-55.969	5	-148.001	3	-196.22	5
79		5	max	-162.622	5	16.504	3	56.67	5	311.419	3	181.725	5	454.278	5	694.816	3
80			min	-303.298	3	-15.436	5	-83.134	3	-181.725	5	-311.419	3	-587.806	3	-536.979	5
81	M9	1	max	371.854	2	36.628	3	4.25	3	0	5	0	5	0	5	0	5
82			min	229.031	5	-3.12	5	-4.429	5	0	2	0	2	0	2	0	2
83		2	max	370.084	2	29.826	3	4.25	3	197.65	3	4.992	5	518.706	3	156.896	5
84			min	227.969	5	-7.202	5	-4.429	5	-4.992	5	-197.65	3	-132.733	5	-613.136	3
85		3	max	345.074	2	21.377	5	19.232	3	66.282	5	110.151	3	152.454	3	219.237	5
86			min	243.112	5	-15.099	3	-11.864	5	-110.15	3	-66.282	5	-185.472	5	-180.208	3
87		4	max	343.304	2	17.295	5	19.232	3	279.095	5	367.521	3	162.573	3	96.989	5
88			min	242.05	5	-21.902	3	-11.864	5	-367.52	3	-279.096	5	-82.052	5	-192.169	3
89		5	max	341.535	2	13.214	5	19.232	3	464.068	5	671.293	3	78.536	3	41.52	5
90			min	240.989	5	-28.705	3	-11.864	5	-671.292	3	-464.069	5	-35.125	5	-92.833	3
91	M10	1	max	21.61	3	75.591	3	151.641	3	133.12	5	225.48	3	541.308	5	1168.064	3
92			min	-10.242	5	-33.98	5	-106.018	5	-225.48	3	-133.12	5	-988.169	3	-639.852	5
93		2	max	20.828	3	75.591	3	151.641	3	244.152	5	342.696	3	103.461	5	328.013	3
94			min	-10.711	5	-33.98	5	-106.018	5	-342.695	3	-244.152	5	-277.496	3	-122.296	5
95		3	max	20.045	3	75.591	3	151.641	3	355.184	5	459.911	3	433.177	3	395.26	5
96			min	-11.181	5	-33.98	5	-106.018	5	-459.911	3	-355.184	5	-334.386	5	-512.037	3
97		4	max	19.262	3	75.591	3	151.641	3	466.216	5	577.127	3	1143.85	3	912.816	5
98			min	-11.65	5	-33.98	5	-106.018	5	-577.126	3	-466.217	5	-772.232	5	-1352.088	3
99		5	max	18.48	3	75.591	3	151.641	3	577.248	5	694.343	3	1854.524	3	1430.373	5
100			min	-12.12	5	-33.98	5	-106.018	5	-694.341	3	-577.249	5	-1210.079	5	-2192.138	3
101	M11	1	max	168.072	2	95.064	5	44.954	5	156.31	3	191.887	5	1163.583	3	1178.601	5
102			min	119.45	5	-108.723	3	-64.074	3	-191.887	5	-156.31	3	-997.083	5	-1375.413	3
103		2	max	168.855	2	95.064	5	44.954	5	87.493	3	114.652	5	623.155	3	660.971	5
104			min	119.92	5	-108.723	3	-64.074	3	-114.652	5	-87.493	3	-559.173	5	-736.6	3
105		3	max	169.638	2	95.064	5	44.954	5	18.677	3	37.417	5	82.727	3	143.34	5
106			min	120.389	5	-108.723	3	-64.074	3	-37.417	5	-18.677	3	-121.264	5	-97.788	3
107		4	max	170.42	2	95.064	5	44.954	5	39.817	5	50.14	3	316.646	5	541.025	3
108			min	120.859	5	-108.723	3	-64.074	3	-50.14	3	-39.818	5	-457.701	3	-374.291	5
109		5	max	171.203	2	95.064	5	44.954	5	117.052	5	118.957	3	754.555	5	1179.837	3
110			min	121.329	5	-108.723	3	-64.074	3	-118.956	3	-117.052	5	-998.129	3	-891.921	5
111	M12	1	max	44.02	3	110.879	3	7.58	5	162.517	5	659.996	3	71.463	5	974.066	3
112			min	-22.964	5	-15.179	5	-15.424	3	-659.995	3	-162.517	5	-824.049	3	-84.473	5
113		2	max	45.031	3	110.879	3	7.58	5	117.198	5	408.499	3	40.758	5	518.164	3
114			min	-22.357	5	-15.179	5	-15.424	3	-408.498	3	-117.198	5	-438.361	3	-48.178	5
115		3	max	46.042	3	110.879	3	7.58	5	71.878	5	157.001	3	10.054	5	62.263	3

Envelope Member Section Stresses (Continued)

	Member	Sec		Axial[psi]	LC	y Shear[psi]	LC	z Shear[psi]	LC	y-Top[psi]	LC	y-Bot[psi]	LC	z-Top[psi]	LC	z-Bot[psi]	LC
116			min	-21.75	5	-15.179	5	-15.424	3	-157.001	3	-71.879	5	-52.673	3	-11.884	5
117		4	max	47.053	3	110.879	3	7.58	5	94.497	3	-26.559	5	333.014	3	24.411	5
118			min	-21.144	5	-15.179	5	-15.424	3	26.559	5	-94.497	3	-20.651	5	-393.639	3
119		5	max	48.064	3	110.879	3	7.58	5	345.994	3	18.76	5	718.702	3	60.705	5
120			min	-20.537	5	-15.179	5	-15.424	3	-18.76	5	-345.994	3	-51.356	5	-849.541	3
121	M13	1	max	0	5	0	5	0	5	0	5	0	5	0	5	0	5
122			min	0	3	0	2	0	2	0	2	0	2	0	2	0	2
123		2	max	0	5	0	5	0	5	0	5	0	5	0	5	0	5
124			min	0	3	0	2	0	2	0	2	0	2	0	2	0	2
125		3	max	0	5	0	5	0	5	0	5	0	5	0	5	0	5
126			min	0	3	0	2	0	2	0	2	0	2	0	2	0	2
127		4	max	0	5	0	5	0	5	0	5	0	5	0	5	0	5
128			min	0	3	0	2	0	2	0	2	0	2	0	2	0	2
129		5	max	0	5	0	5	0	5	0	5	0	5	0	5	0	5
130			min	0	3	0	2	0	2	0	2	0	2	0	2	0	2
131	M14	1	max	0	3	0	5	0	5	0	5	0	5	0	5	0	5
132			min	0	2	0	2	0	2	0	2	0	2	0	2	0	2
133		2	max	0	3	0	5	0	5	0	5	0	5	0	5	0	5
134			min	0	2	0	2	0	2	0	2	0	2	0	2	0	2
135		3	max	0	3	0	5	0	5	0	5	0	5	0	5	0	5
136			min	0	2	0	2	0	2	0	2	0	2	0	2	0	2
137		4	max	0	3	0	5	0	5	0	5	0	5	0	5	0	5
138			min	0	2	0	2	0	2	0	2	0	2	0	2	0	2
139		5	max	0	3	0	5	0	5	0	5	0	5	0	5	0	5
140			min	0	2	0	2	0	2	0	2	0	2	0	2	0	2
141	M15	1	max	0	4	0	5	0	5	0	5	0	5	0	5	0	5
142			min	0	5	0	2	0	2	0	2	0	2	0	2	0	2
143		2	max	0	4	0	5	0	5	0	5	0	5	0	5	0	5
144			min	0	5	0	2	0	2	0	2	0	2	0	2	0	2
145		3	max	0	4	0	5	0	5	0	5	0	5	0	5	0	5
146			min	0	5	0	2	0	2	0	2	0	2	0	2	0	2
147		4	max	0	4	0	5	0	5	0	5	0	5	0	5	0	5
148			min	0	5	0	2	0	2	0	2	0	2	0	2	0	2
149		5	max	0	4	0	5	0	5	0	5	0	5	0	5	0	5
150			min	0	5	0	2	0	2	0	2	0	2	0	2	0	2
151	M16	1	max	0	5	0	5	0	5	0	5	0	5	0	5	0	5
152			min	0	2	0	2	0	2	0	2	0	2	0	2	0	2
153		2	max	0	5	0	5	0	5	0	5	0	5	0	5	0	5
154			min	0	2	0	2	0	2	0	2	0	2	0	2	0	2
155		3	max	0	5	0	5	0	5	0	5	0	5	0	5	0	5
156			min	0	2	0	2	0	2	0	2	0	2	0	2	0	2
157		4	max	0	5	0	5	0	5	0	5	0	5	0	5	0	5
158			min	0	2	0	2	0	2	0	2	0	2	0	2	0	2
159		5	max	0	5	0	5	0	5	0	5	0	5	0	5	0	5
160			min	0	2	0	2	0	2	0	2	0	2	0	2	0	2
161	M17	1	max	0	3	0	5	0	5	0	5	0	5	0	5	0	5
162			min	0	5	0	2	0	2	0	2	0	2	0	2	0	2
163		2	max	0	3	0	5	0	5	0	5	0	5	0	5	0	5
164			min	0	5	0	2	0	2	0	2	0	2	0	2	0	2
165		3	max	0	3	0	5	0	5	0	5	0	5	0	5	0	5
166			min	0	5	0	2	0	2	0	2	0	2	0	2	0	2
167		4	max	0	3	0	5	0	5	0	5	0	5	0	5	0	5
168			min	0	5	0	2	0	2	0	2	0	2	0	2	0	2
169		5	max	0	3	0	5	0	5	0	5	0	5	0	5	0	5
170			min	0	5	0	2	0	2	0	2	0	2	0	2	0	2
171	M18	1	max	0	5	0	5	0	5	0	5	0	5	0	5	0	5
172			min	0	3	0	2	0	2	0	2	0	2	0	2	0	2
173		2	max	0	5	0	5	0	5	0	5	0	5	0	5	0	5
174			min	0	3	0	2	0	2	0	2	0	2	0	2	0	2
175		3	max	0	5	0	5	0	5	0	5	0	5	0	5	0	5

Envelope Member Section Stresses (Continued)

	Member	Sec		Axial[psi]	LC	y Shear[psi]	LC	z Shear[psi]	LC	y-Top[psi]	LC	y-Bot[psi]	LC	z-Top[psi]	LC	z-Bot[psi]	LC
176			min	0	3	0	2	0	2	0	2	0	2	0	2	0	2
177		4	max	0	5	0	5	0	5	0	5	0	5	0	5	0	5
178			min	0	3	0	2	0	2	0	2	0	2	0	2	0	2
179		5	max	0	5	0	5	0	5	0	5	0	5	0	5	0	5
180			min	0	3	0	2	0	2	0	2	0	2	0	2	0	2

Envelope AISC 15TH (360-16): ASD Member Steel Code Checks

	Member	Shape	Code Check	Loc[ft]	LC	Shear Check	Loc[ft]	Dir	LC	Pnc/om [lb]	Pnt/om [lb]	Mnyy/om [lb-ft]	Mnzz/om [lb-ft]	Cb	Eqn
1	M1	L2.5X2.5X4	0.109	1.5	3	0.006	1.5	z	3	23836.797	25652.695	740.888	1688.216	1.5	H2-1
2	M2	L2.5X2.5X4	0.085	0	3	0.008	2	z	3	22513.778	25652.695	740.888	1688.216	1.5	H2-1
3	M3	L2.5X2.5X4	0.075	1.739	3	0.002	0	y	3	14935.724	25652.695	740.888	1639.103	1.5	H2-1
4	M4	L2.5X2.5X4	0.076	0.92	3	0.019	0.92	z	3	24953.906	25652.695	740.888	1688.216	1.5	H2-1
5	M5	L2.5X2.5X4	0.028	0	3	0.005	0.92	z	3	24953.906	25652.695	740.888	1688.216	1.5	H2-1
6	M6	L2.5X2.5X4	0.042	1.189	3	0.008	1.189	y	3	24497.027	25652.695	740.888	1688.216	1.5	H2-1
7	M7	L2.5X2.5X4	0.101	1.5	3	0.005	1.5	z	3	23836.797	25652.695	740.888	1688.216	1.5	H2-1
8	M8	L2.5X2.5X4	0.088	0	3	0.008	2	z	3	22513.778	25652.695	740.888	1688.216	1.5	H2-1
9	M9	L2.5X2.5X4	0.069	1.739	3	0.003	4.071	y	3	14935.724	25652.695	740.888	1639.103	1.5	H2-1
10	M10	L2.5X2.5X4	0.091	0.92	3	0.018	0.92	z	3	24953.906	25652.695	740.888	1688.216	1.37	H2-1
11	M11	L2.5X2.5X4	0.054	0	3	0.009	0.92	y	3	24953.906	25652.695	740.888	1688.216	1.5	H2-1
12	M12	L2.5X2.5X4	0.054	0	3	0.009	1.189	y	3	24497.027	25652.695	740.888	1688.216	1.5	H2-1

Larson Engineering, Inc.
1488 Bond Street, Suite 100
Naperville, IL 60563-6503
630.357.0540   Fax: 630.357.0164
www.larsonengr.com

Larson

Clarifiers Walkway, Scum Box, Drive Shaft, and Rake Arms
Cottage Grove, OR

Center Column

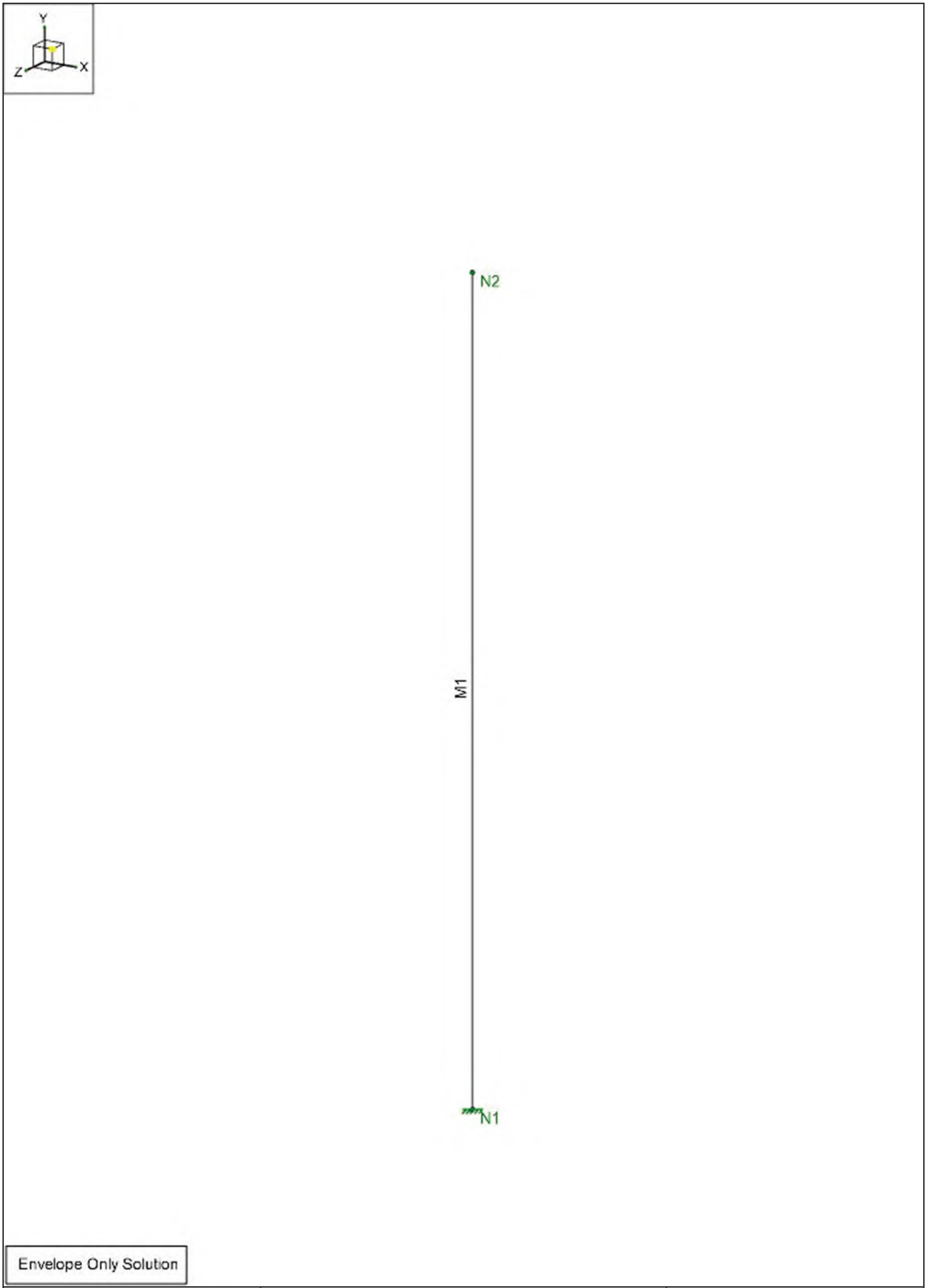

LEI	Cottage Grove, OR	SK-1
JF		Aug 22, 2022
21220680.000	Node and Member Labels	column_calc.r3d

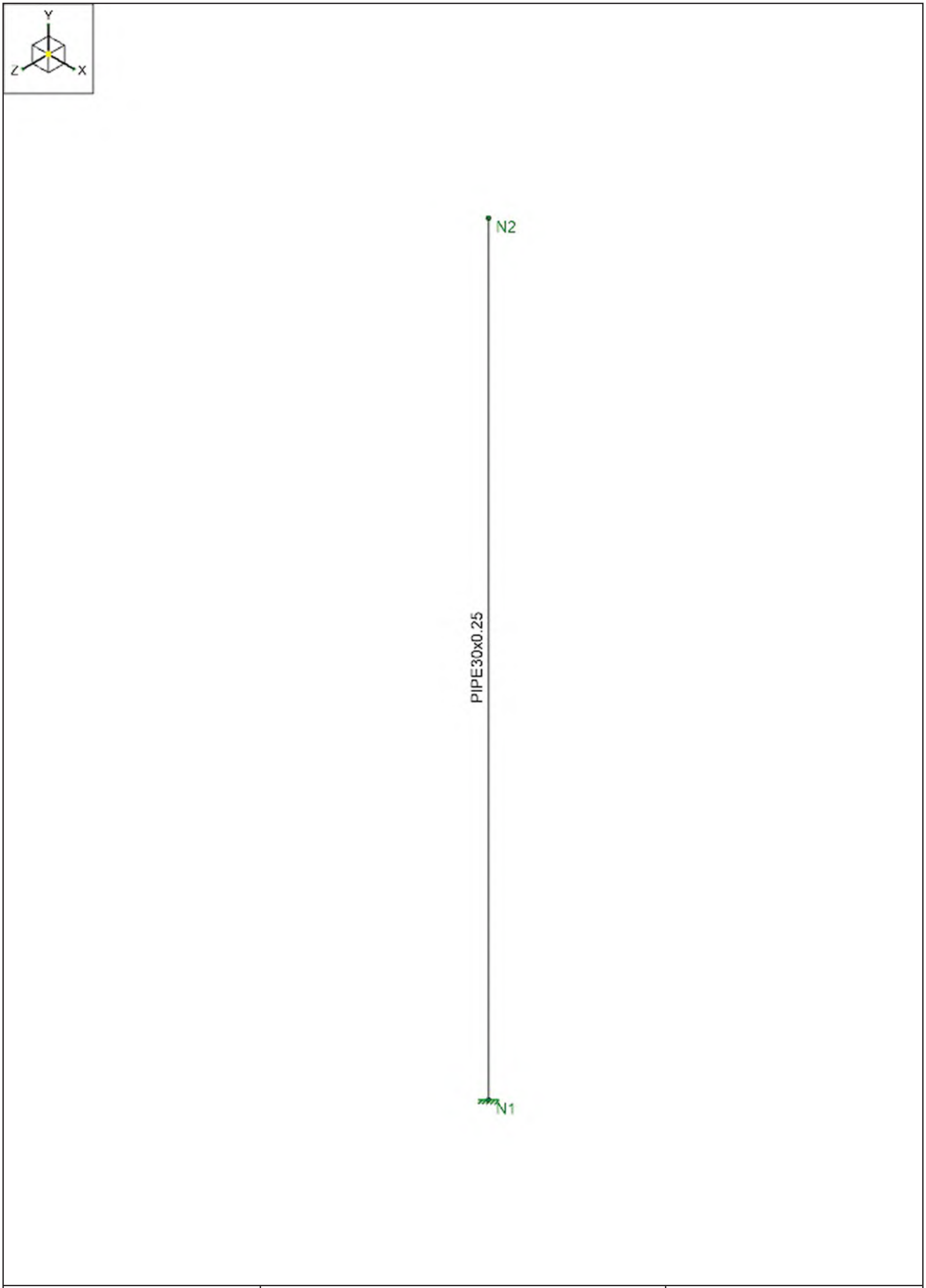

LEI	Cottage Grove, OR	SK-2
JF		Aug 22, 2022
21220680.000	Member Shape	column_calc.r3d

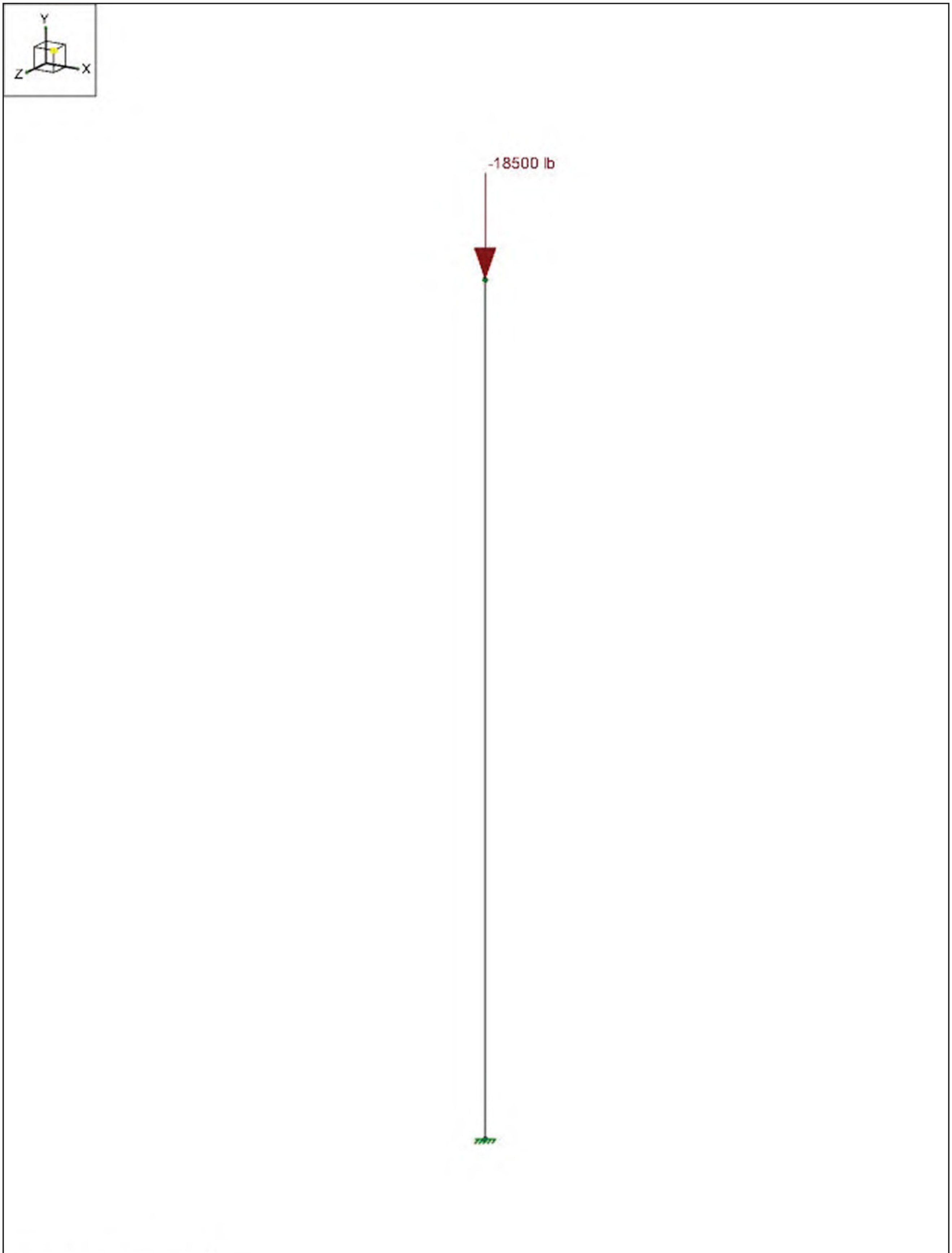

Loads: BLC 1, Dead Load
Envelope Only Solution

LEI	Cottage Grove, OR	SK-3
JF		Aug 22, 2022
21220680.000	BLC 1 - Dead Load	column_calc.r3d

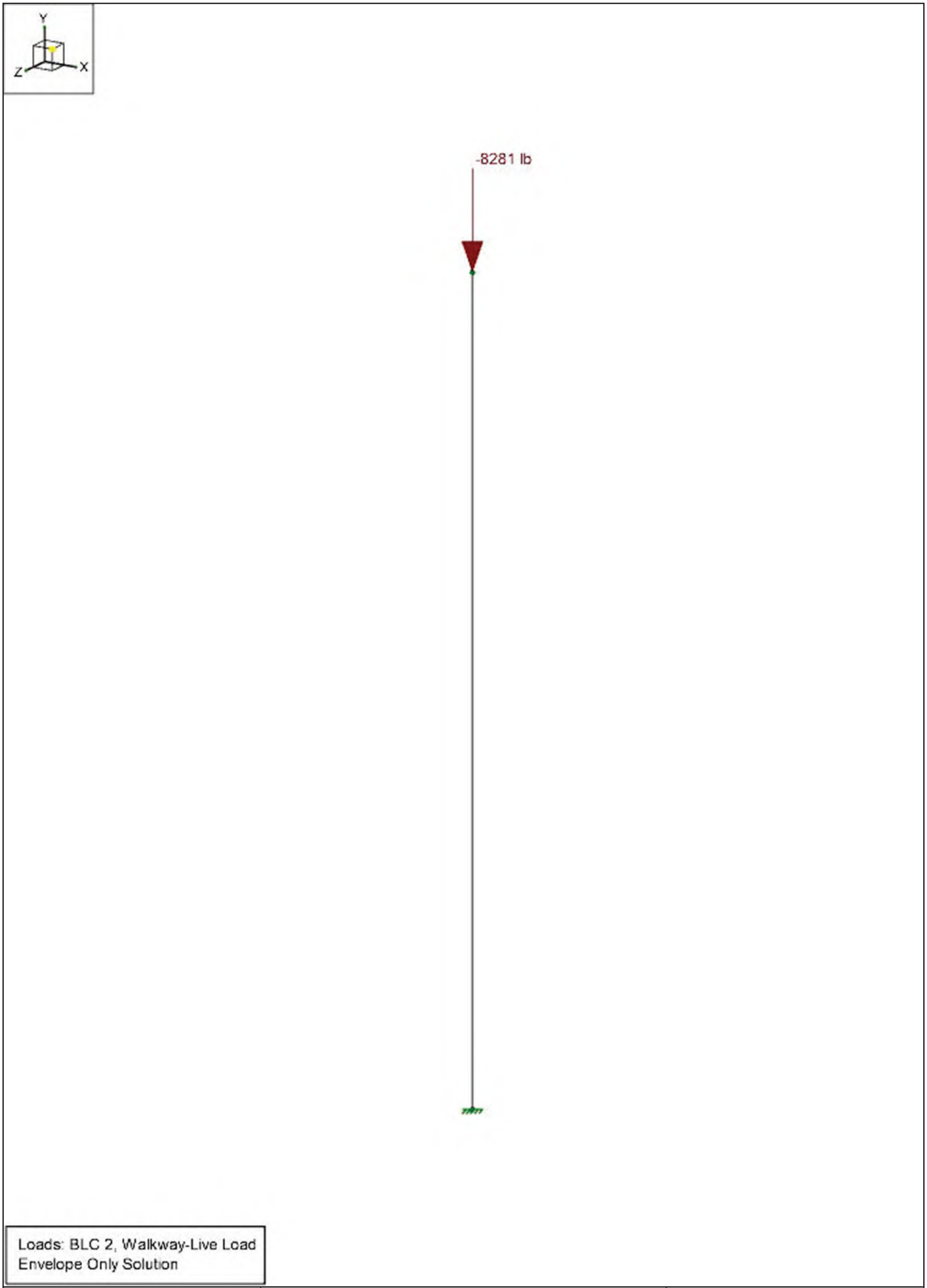

Loads: BLC 2, Walkway-Live Load
Envelope Only Solution

LEI	Cottage Grove, OR	SK-4
JF		Aug 22, 2022
21220680.000	BLC 2 - Walkway Live Load	column_calc.r3d

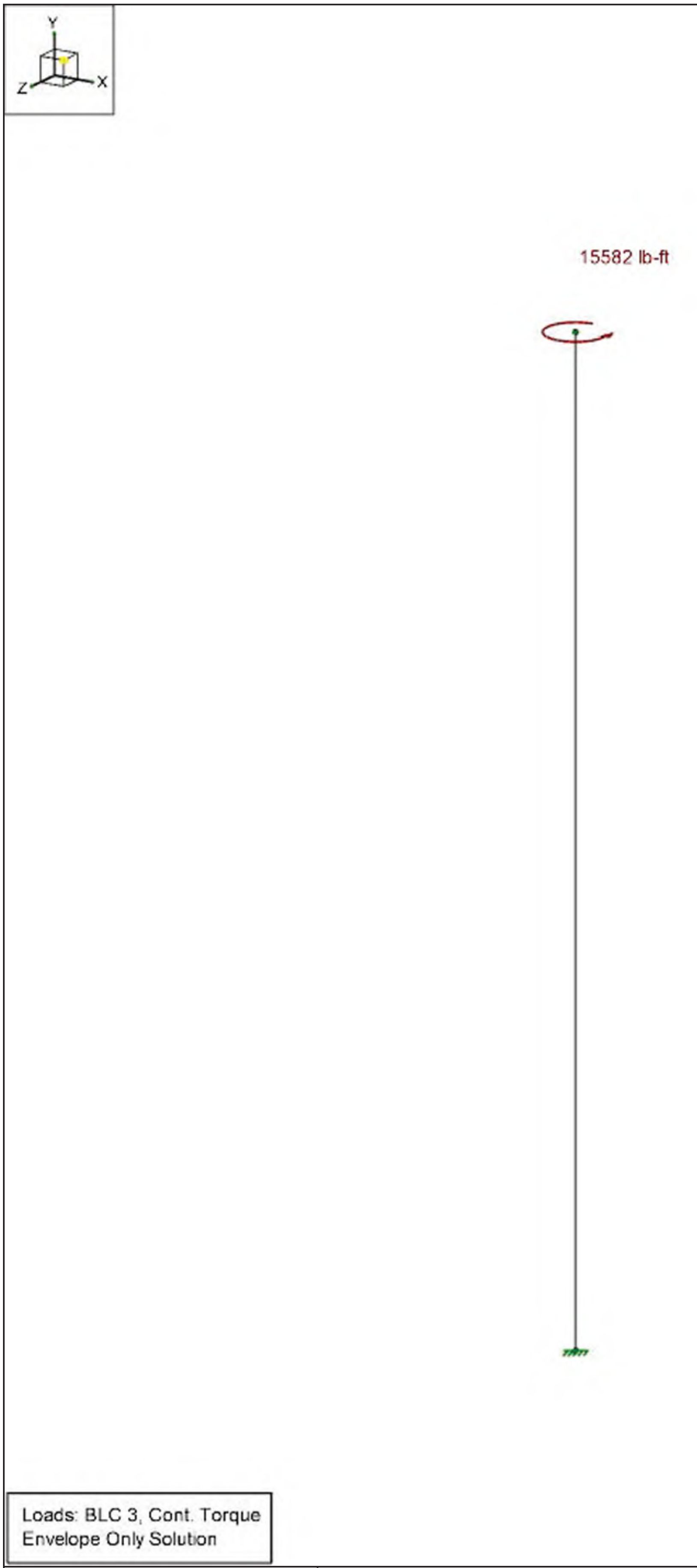

LEI	Cottage Grove, OR	SK-5
JF		Aug 22, 2022
21220680.000	BLC 3 - Torque (Continuous)	column_calc.r3d

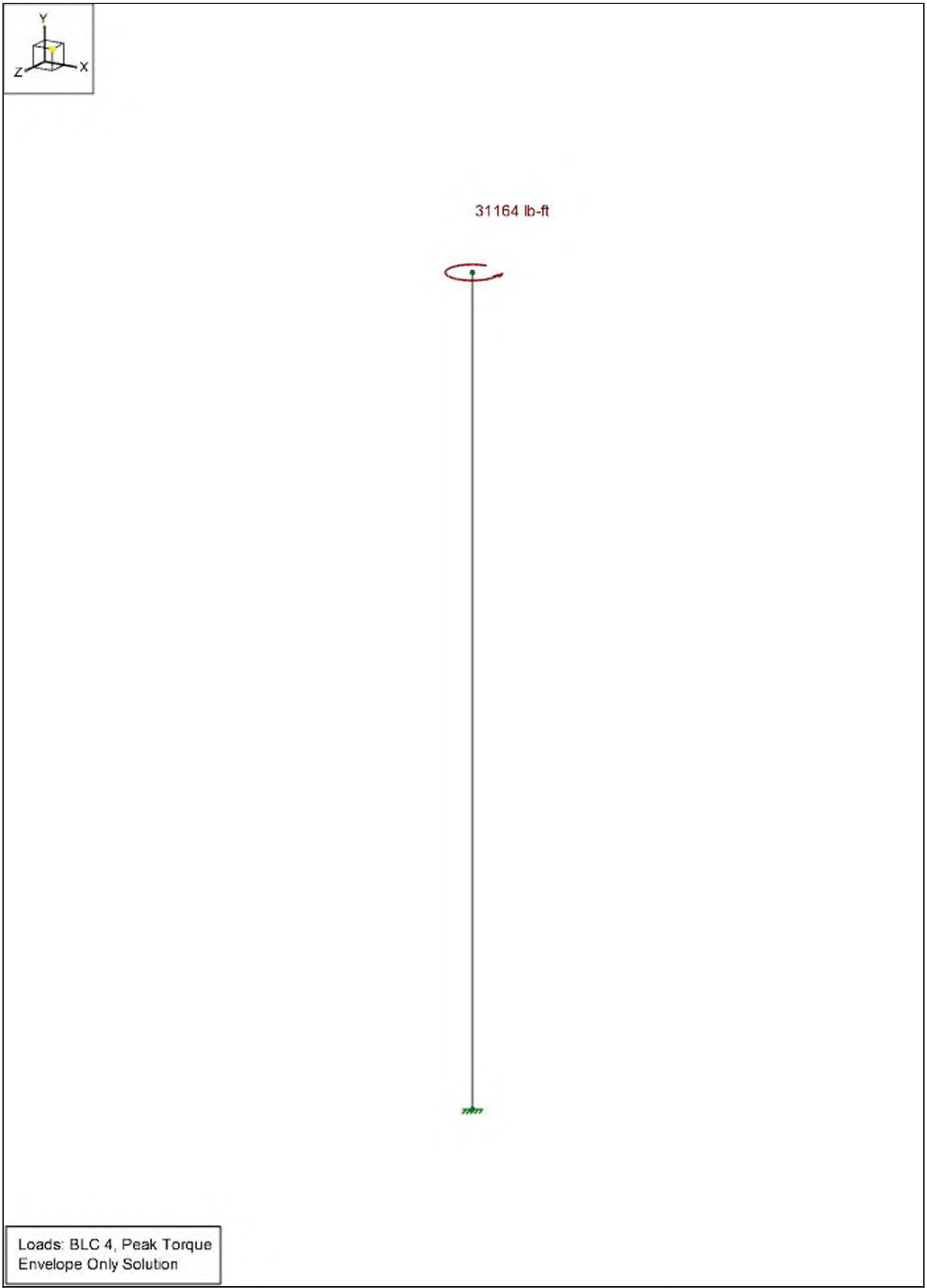

Loads: BLC 4, Peak Torque
Envelope Only Solution

LEI	Cottage Grove, OR	SK-6
JF		Aug 22, 2022
21220680.000	BLC 4 - Torque (Peak)	column_calc.r3d

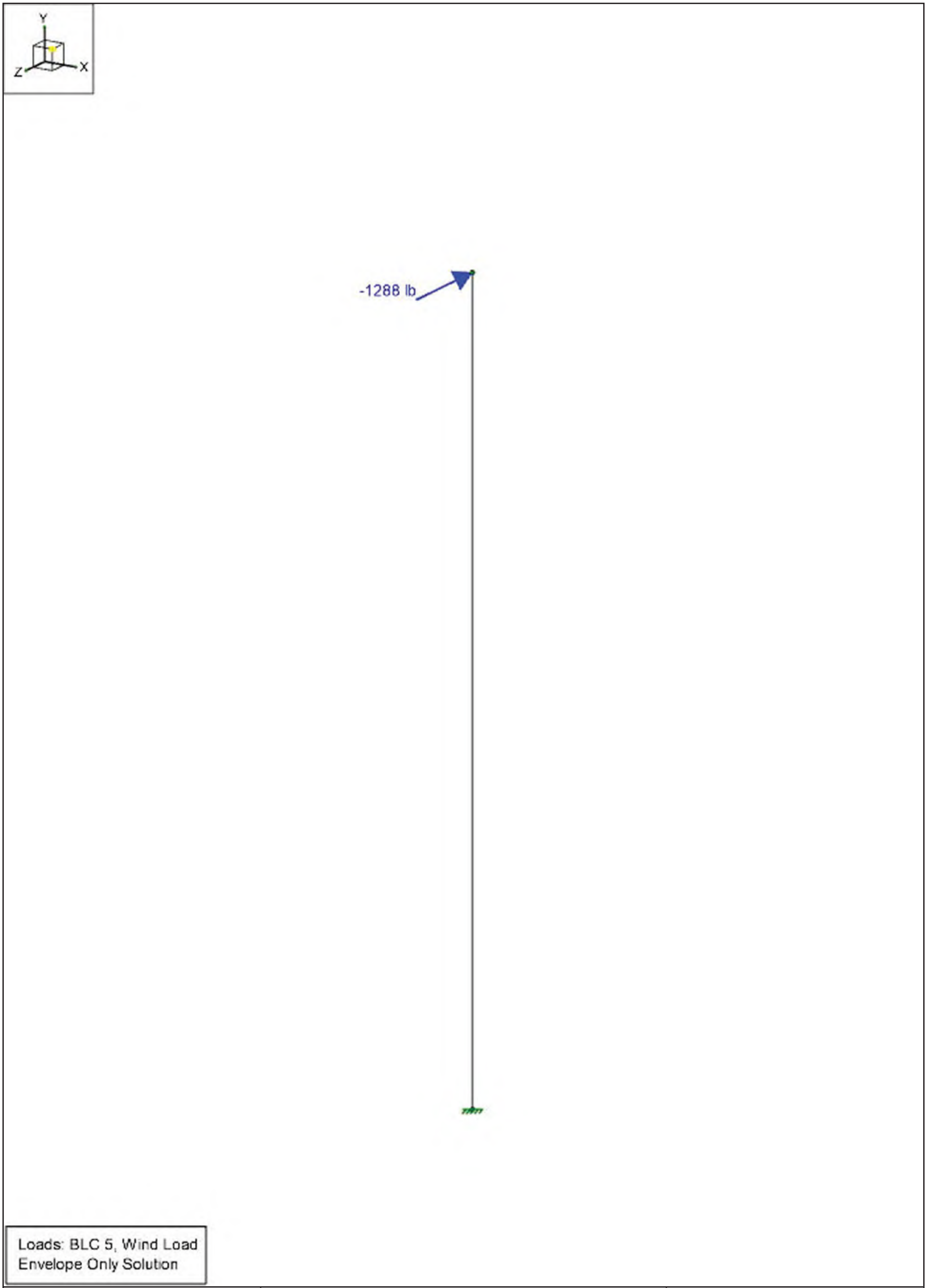

LEI	Cottage Grove, OR	SK-7
JF		Aug 22, 2022
21220680.000	BLC 5 - Wind Load	column_calc.r3d

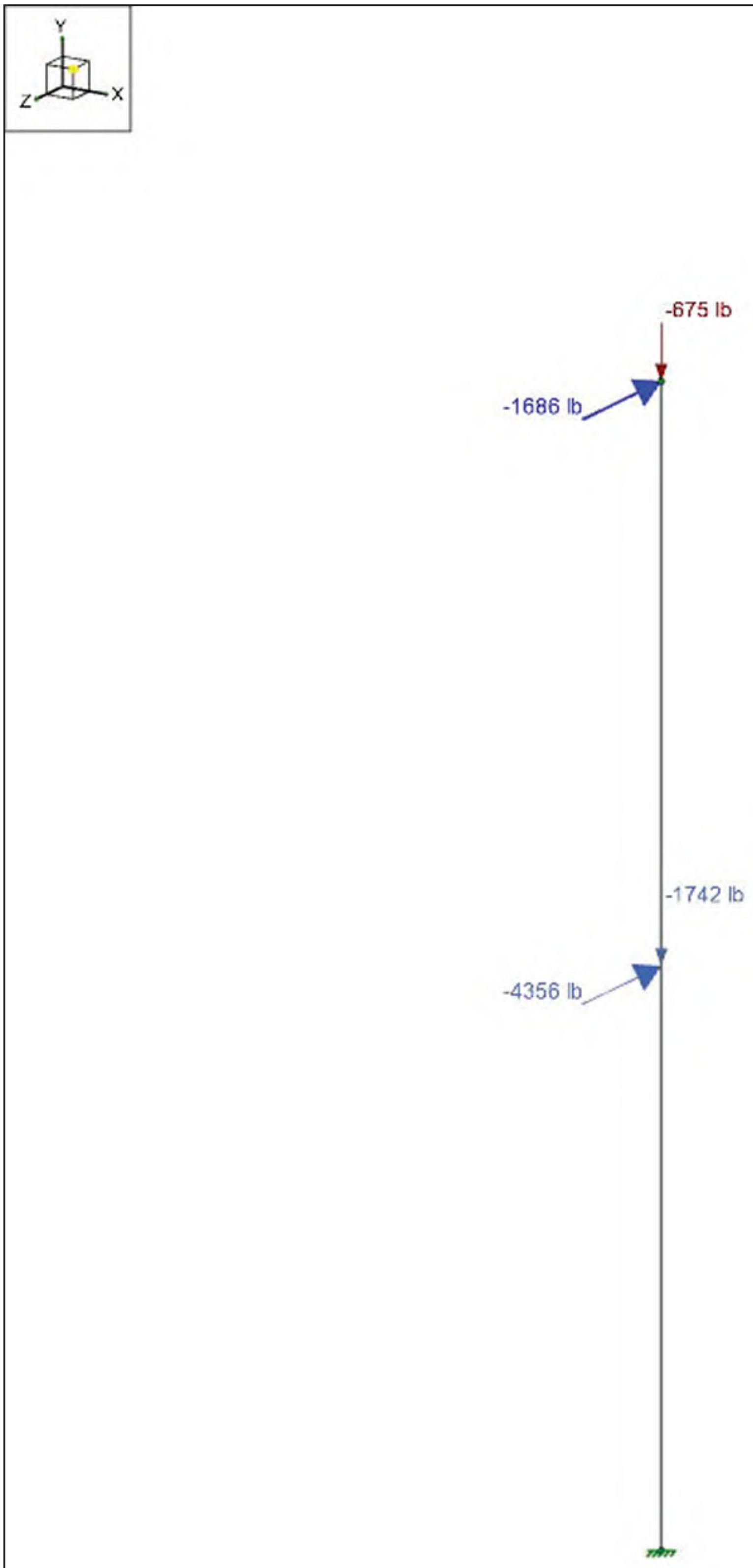

Loads: BLC 6, Earthquake Load
Envelope Only Solution

LEI	Cottage Grove, OR	SK-8
JF		Aug 22, 2022
21220680.000	BLC 6 - Earthquake Load	column_calc.r3d

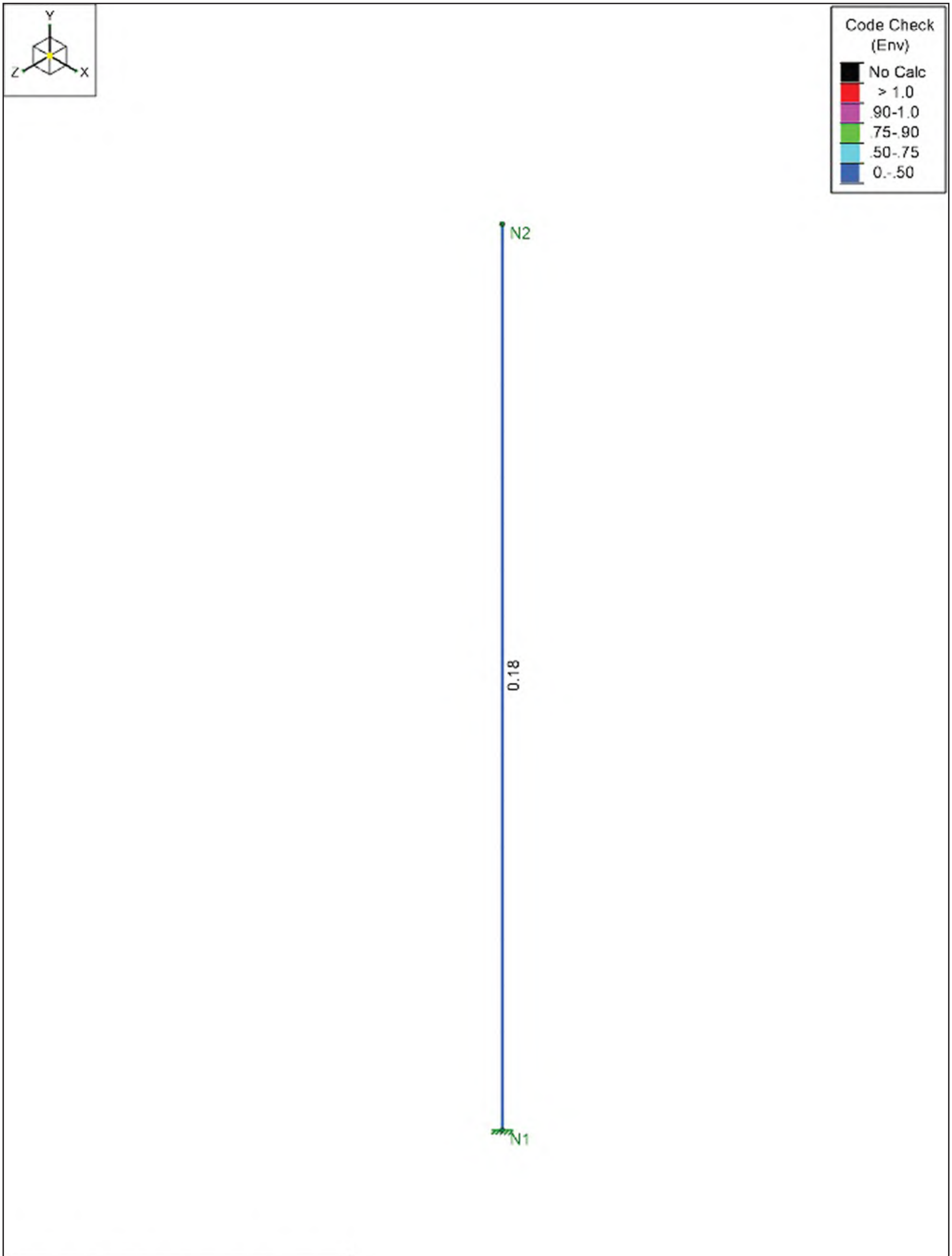

Member Code Checks Displayed (Enveloped)
Envelope Only Solution

LEI	Cottage Grove, OR	SK-8
JF		Aug 22, 2022
21220680.000	Envelope Member Unity	column_calc.r3d

Node Coordinates

	Label	X [ft]	Y [ft]	Z [ft]	Detach From Diaphragm
1	N1	0	0	0	
2	N2	0	17	0	

Node Boundary Conditions

	Node Label	X [k/in]	Y [k/in]	Z [k/in]	X Rot [k-ft/rad]	Y Rot [k-ft/rad]	Z Rot [k-ft/rad]
1	N1	Reaction	Reaction	Reaction	Reaction	Reaction	Reaction

Member Primary Data

	Label	I Node	J Node	Section/Shape	Type	Design List	Material	Design Rule
1	M1	N1	N2	PIPE30x0.25	Column	Pipe Default	A276 S304	Typical

Member Advanced Data

	Label	Physical	Deflection Ratio Options	Seismic DR
1	M1	Yes	** NA **	None

Node Loads and Enforced Displacements (BLC 1 : Dead Load)

	Node Label	L, D, M	Direction	Magnitude [(lb, lb-ft), (in, rad), (lb*s²/ft, lb*s²*ft)]
1	N2	L	Y	-18500

Node Loads and Enforced Displacements (BLC 2 : Walkway-Live Load)

	Node Label	L, D, M	Direction	Magnitude [(lb, lb-ft), (in, rad), (lb*s²/ft, lb*s²*ft)]
1	N2	L	Y	-8281

Node Loads and Enforced Displacements (BLC 3 : Cont. Torque)

	Node Label	L, D, M	Direction	Magnitude [(lb, lb-ft), (in, rad), (lb*s²/ft, lb*s²*ft)]
1	N2	L	MY	15582

Node Loads and Enforced Displacements (BLC 4 : Peak Torque)

	Node Label	L, D, M	Direction	Magnitude [(lb, lb-ft), (in, rad), (lb*s²/ft, lb*s²*ft)]
1	N2	L	MY	31164

Node Loads and Enforced Displacements (BLC 5 : Wind Load)

	Node Label	L, D, M	Direction	Magnitude [(lb, lb-ft), (in, rad), (lb*s²/ft, lb*s²*ft)]
1	N2	L	Z	-1288

Node Loads and Enforced Displacements (BLC 6 : Earthquake Load)

	Node Label	L, D, M	Direction	Magnitude [(lb, lb-ft), (in, rad), (lb*s²/ft, lb*s²*ft)]
1	N2	L	Z	-1686
2	N2	L	Y	-675

Member Point Loads (BLC 1 : Dead Load)

	Member Label	Direction	Magnitude [lb, lb-ft]	Location [(ft, %)]
1	M1	y	0	0
2	M1	y	0	0
3	M1	y	0	0

Member Point Loads (BLC 1 : Dead Load) (Continued)

	Member Label	Direction	Magnitude [lb, lb-ft]	Location [(ft, %)]
4	M1	y	0	0
5	M1	y	0	0
6	M1	y	0	0

Member Point Loads (BLC 6 : Earthquake Load)

	Member Label	Direction	Magnitude [lb, lb-ft]	Location [(ft, %)]
1	M1	Z	-4356	8.5
2	M1	Y	-1742	8.5

Basic Load Cases

	BLC Description	Category	Nodal	Point
1	Dead Load	DL	1	6
2	Walkway-Live Load	LL	1	
3	Cont. Torque	None	1	
4	Peak Torque	None	1	
5	Wind Load	WL	1	
6	Earthquake Load	EL	2	2

Load Combinations

	Description	Solve	P-Delta	BLC	Factor	BLC	Factor	BLC	Factor
1	(1) DL	Yes	Y	DL	1				
2	(2) DL + LL	Yes	Y	DL	1	LL	1		
3	(5) DL+0.6WL	Yes	Y	DL	1	WL	0.6		
4	(5.1) DL+ 0.7EL	Yes	Y	DL	1	EL	0.7		
5	(6a) DL+0.75LL+(0.75*0.6)WL	Yes	Y	DL	1	LL	0.75	WL	0.45
6	(6b) DL+0.75LL+(0.75)(0.7EL)	Yes	Y	DL	1	EL	0.525	LL	0.75
7	(7) 0.6DL +0.6WL	Yes	Y	DL	0.6	WL	0.6		
8	(8) 0.6DL + 0.7EL	Yes	Y	DL	0.6	EL	0.7		
9	(10) 0.6DL - 0.7EL	Yes	Y	DL	0.6	EL	-0.7		

Load Combination Design

	Description	Service	Hot Rolled	Cold Formed	Wood	Concrete	Masonry	Aluminum	Stainless	Connection
1	(1) DL		Yes	Yes	Yes	Yes	Yes	Yes	Yes	Yes
2	(2) DL + LL		Yes	Yes	Yes	Yes	Yes	Yes	Yes	Yes
3	(5) DL+0.6WL		Yes	Yes	Yes	Yes	Yes	Yes	Yes	Yes
4	(5.1) DL+ 0.7EL		Yes	Yes	Yes	Yes	Yes	Yes	Yes	Yes
5	(6a) DL+0.75LL+(0.75*0.6)WL		Yes	Yes	Yes	Yes	Yes	Yes	Yes	Yes
6	(6b) DL+0.75LL+(0.75)(0.7EL)		Yes	Yes	Yes	Yes	Yes	Yes	Yes	Yes
7	(7) 0.6DL +0.6WL		Yes	Yes	Yes	Yes	Yes	Yes	Yes	Yes
8	(8) 0.6DL + 0.7EL		Yes	Yes	Yes	Yes	Yes	Yes	Yes	Yes
9	(10) 0.6DL - 0.7EL		Yes	Yes	Yes	Yes	Yes	Yes	Yes	Yes

Envelope Node Reactions

	Node Label		X [lb]	LC	Y [lb]	LC	Z [lb]	LC	MX [lb-ft]	LC	MY [lb-ft]	LC	MZ [lb-ft]	LC
1	N1	max	0	9	26781	2	4229.4	8	46266.736	4	0	9	0	9
2		min	0	1	9408.1	9	-4229.4	9	-46126.348	9	0	1	0	1
3	Totals:	max	0	9	26781	2	4229.4	8						
4		min	0	1	9408.1	9	-4229.4	9						

Envelope Node Displacements

	Node Label		X [in]	LC	Y [in]	LC	Z [in]	LC	X Rotation [rad]	LC	Y Rotation [rad]	LC	Z Rotation [rad]	LC
1	N1	max	0	9	0	9	0	9	0	9	0	9	0	9
2		min	0	1	0	2	0	4	0	4	0	1	0	1
3	N2	max	0	9	-0.004	9	0.109	9	7.011e-4	9	0	9	0	9
4		min	0	1	-0.01	2	-0.109	4	-7.04e-4	4	0	1	0	1

Envelope Member Section Stresses

	Member	Sec		Axial[ksi]	LC	y Shear[ksi]	LC	z Shear[ksi]	LC	y-Top[ksi]	LC	y-Bot[ksi]	LC	z-Top[ksi]	LC	z-Bot[ksi]	LC
1	M1	1	max	1.146	2	0	9	0.363	4	0	9	0	9	3.212	9	3.221	4
2			min	0.403	9	0	1	-0.363	9	0	1	0	1	-3.221	4	-3.212	9
3		2	max	1.146	2	0	9	0.363	4	0	9	0	9	1.958	9	1.965	4
4			min	0.403	9	0	1	-0.363	9	0	1	0	1	-1.965	4	-1.958	9
5		3	max	1.146	2	0	9	0.102	4	0	9	0	9	0.704	9	0.708	4
6			min	0.455	9	0	1	-0.102	9	0	1	0	1	-0.708	4	-0.704	9
7		4	max	1.146	2	0	9	0.102	4	0	9	0	9	0.352	9	0.354	4
8			min	0.455	9	0	1	-0.102	9	0	1	0	1	-0.354	4	-0.352	9
9		5	max	1.146	2	0	9	0.102	4	0	9	0	9	0	9	0	9
10			min	0.455	9	0	1	-0.102	9	0	1	0	1	0	1	0	1

Envelope Member Section Forces

	Member	Sec		Axial[lb]	LC	y Shear[lb]	LC	z Shear[lb]	LC	Torque[lb-ft]	LC	y-y Moment[lb-ft]	LC	z-z Moment[lb-ft]	LC
1	M1	1	max	26781	2	0	9	4246.173	4	0	9	46126.348	9	0	9
2			min	9408.1	9	0	1	-4237.915	9	0	1	-46266.736	4	0	1
3		2	max	26781	2	0	9	4246.173	4	0	9	28115.211	9	0	9
4			min	9408.1	9	0	1	-4237.915	9	0	1	-28220.502	4	0	1
5		3	max	26781	2	0	9	1196.973	4	0	9	10104.074	9	0	9
6			min	10627.5	9	0	1	-1188.715	9	0	1	-10174.268	4	0	1
7		4	max	26781	2	0	9	1196.973	4	0	9	5052.037	9	0	9
8			min	10627.5	9	0	1	-1188.715	9	0	1	-5087.134	4	0	1
9		5	max	26781	2	0	9	1196.973	4	0	9	0	9	0	9
10			min	10627.5	9	0	1	-1188.715	9	0	1	0	1	0	1

Envelope Member End Reactions

	Member	Member End		Axial[lb]	LC	y Shear[lb]	LC	z Shear[lb]	LC	Torque[lb-ft]	LC	y-y Moment[lb-ft]	LC	z-z Moment[lb-ft]	LC
1	M1	I	max	26781	2	0	9	4246.173	4	0	9	46126.348	9	0	9
2			min	9408.1	9	0	1	-4237.915	9	0	1	-46266.736	4	0	1
3		J	max	26781	2	0	9	1196.973	4	0	9	0	9	0	9
4			min	10627.5	9	0	1	-1188.715	9	0	1	0	1	0	1

Stainless Steel Properties

	Label	E [ksi]	G [ksi]	Nu	Therm. Coeff. [1e^5°F^{-1}]	Density [k/ft^3]	n	Yield [ksi]	Fu [ksi]
1	A276 S316	28000	10780	0.3	0.93	0.5	5.6	30	75
2	A276 S321	29000	11165	0.3	0.73	0.48	5.6	65	94
3	A276 S304	28000	10780	0.3	0.93	0.49	5.6	30	75

Envelope AISC 14TH (360-10): ASD Member Stainless Steel Code Checks

	Member	Shape	Code Check	Loc[ft]	LC	Shear Check	Loc[ft]	Dir	LC	Pnc/om [lb]	Pnt/om [lb]	Mnyy/om [lb-ft]	Mnzz/om [lb-ft]	Cb	Eqn
1	M1	PIPE30x0.25	0.181	0	4	NC	NC	NC	2	372935.12	419741.234	300142.795	300142.795	1	H1-1b

Stainless Steel Design Parameters

	Label	Shape	Length [ft]	Lcomp top [ft]	Function
1	M1	PIPE30x0.25	17	Lbyy	Lateral

Larson Engineering, Inc.
1488 Bond Street, Suite 100
Naperville, IL 60563-6503
630.357.0540   Fax: 630.357.0164
www.larsonengr.com

Larson

Clarifiers Walkway, Scum Box, Drive Shaft, and Rake Arms
Cottage Grove, OR

Fastener Analysis

Larson Engineering, Inc.
1488 Bond Street, Suite 100
Naperville, IL 60563-6503
630.357.0540 Fax: 630.357.0164
www.larsonengr.com

Project: Cottage Grove, OR
Load Determination
ASCE 7-16 Seismic Shear Calculatons

SHEET NO.
PROJECT NO. 21220680.000
BY: JF DATE: 9/2/2022

Column Anchor Loading

Walkway Weight on Column Anchors	3224	lbs	From RISA
Continous Drive Torque	15000	ft-lbs	
Column Height	17	ft	
Column Bolt Circle Diameter	43	in	
Column Diameter	30	in	
Column Wall Thickness	0.25	in	
Dead Load on Column Anchors	21500	lbs	
Earthquake Shear on Column from Walkway, V_w	1686.00	lbs	
Earthquake Vertical on Column from Walkway	674.40	lbs	
Earthquake Shear from Drive Cage, etc., V_{etc}	4356	lbs	
Earthquake Vertical from Drive Cage, etc.	1742	lbs	
Walkway Eccentricity e_w	17.00	ft	
Walkway Moment	28662	ft-lbs	$M_w=V_w*e_w$
Drive Cage, etc. Eccentricity e_{etc}	8.50	ft	
Drivecage, etc. Moment	37022	ft-lbs	$M_{etc}=V_{etc}*e_{etc}$
Total Earthquake Shear	6042	lbs	
Total Earthquake Overturing Moment	65684	ft-lbs	
Total Vertical Earthquake Axial	2417	lbs	
Overstrength Factor	1.25		(Table 12.2-1 G)

Load Combinations

Laod Case 1: 1.2DL + 1.6LL + Peak Torque

Rv	29669	lbs
Torque Rm	30000	lbs

Load Case 2: (1.2+0.2Sds)DL+LL+Cont Torque+Seismic			With Overstrength	
Rv	34864	lbs	35469	lbs
Rh	6042	lbs	7552	lbs
Torque Rm	15000	ft-lbs	18750	ft-lbs
Overturning Rm	65684	ft-lbs	82105	ft-lbs

Load Case 3: (0.9-0.2Sds)DL+Seismic			With Overstrength	
Rv	21889	lbs	22493	
Rh	6042	lbs	7552	lbs
Overturning Rm	65684	lbs	82105	lbs

Company:	LEI	Date:	9/2/2022
Engineer:	JF	Page:	1/6
Project:	21220680.000		
Address:			
Phone:			
E-mail:			

1.Project information

Customer company:
Customer contact name:
Customer e-mail:
Comment:

Project description: Column Anchor
Location:
Fastening description:

2. Input Data & Anchor Parameters

General
Design method:ACI 318-14
Units: Imperial units

Anchor Information:
Anchor type: Cast-in-place
Material: F593 304/316SS
Diameter (inch): 1.250
Effective Embedment depth, h_{ef} (inch): 12.000
Anchor category: -
Anchor ductility: Yes
h_{min} (inch): 14.00
C_{min} (inch): 7.50
S_{min} (inch): 7.50

Base Material
Concrete: Normal-weight
Concrete thickness, h (inch): 18.25
State: Cracked
Compressive strength, f'_c (psi): 4500
$\Psi_{c,V}$: 1.0
Reinforcement condition: A tension, A shear
Supplemental reinforcement: Not applicable
Reinforcement provided at corners: No
Ignore concrete breakout in tension: No
Ignore concrete breakout in shear: No
Ignore 6do requirement: No
Build-up grout pad: No

Base Plate
Diameter x Thickness (inch): 48.00 x 1.00

Recommended Anchor
Anchor Name: Heavy Hex Bolt - 1 1/4"Ø Heavy Hex Bolt, F593 304/316SS

Load and Geometry
Load factor source: ACI 318 Section 5.3
Load combination: not set
Seismic design: Yes
Anchors subjected to sustained tension: Not applicable
Ductility section for tension: 17.2.3.4.3 (d) is satisfied
Ductility section for shear: 17.2.3.5.3 (c) is satisfied
Ω_0 factor: not set
Apply entire shear load at front row: No
Anchors only resisting wind and/or seismic loads: No

Strength level loads:

N_{ua} [lb]: -35469
V_{uax} [lb]: 7552
V_{uay} [lb]: 0
M_{ux} [ft-lb]: 0
M_{uy} [ft-lb]: 82105
M_{uz} [ft-lb]: 18750

<Figure 1>

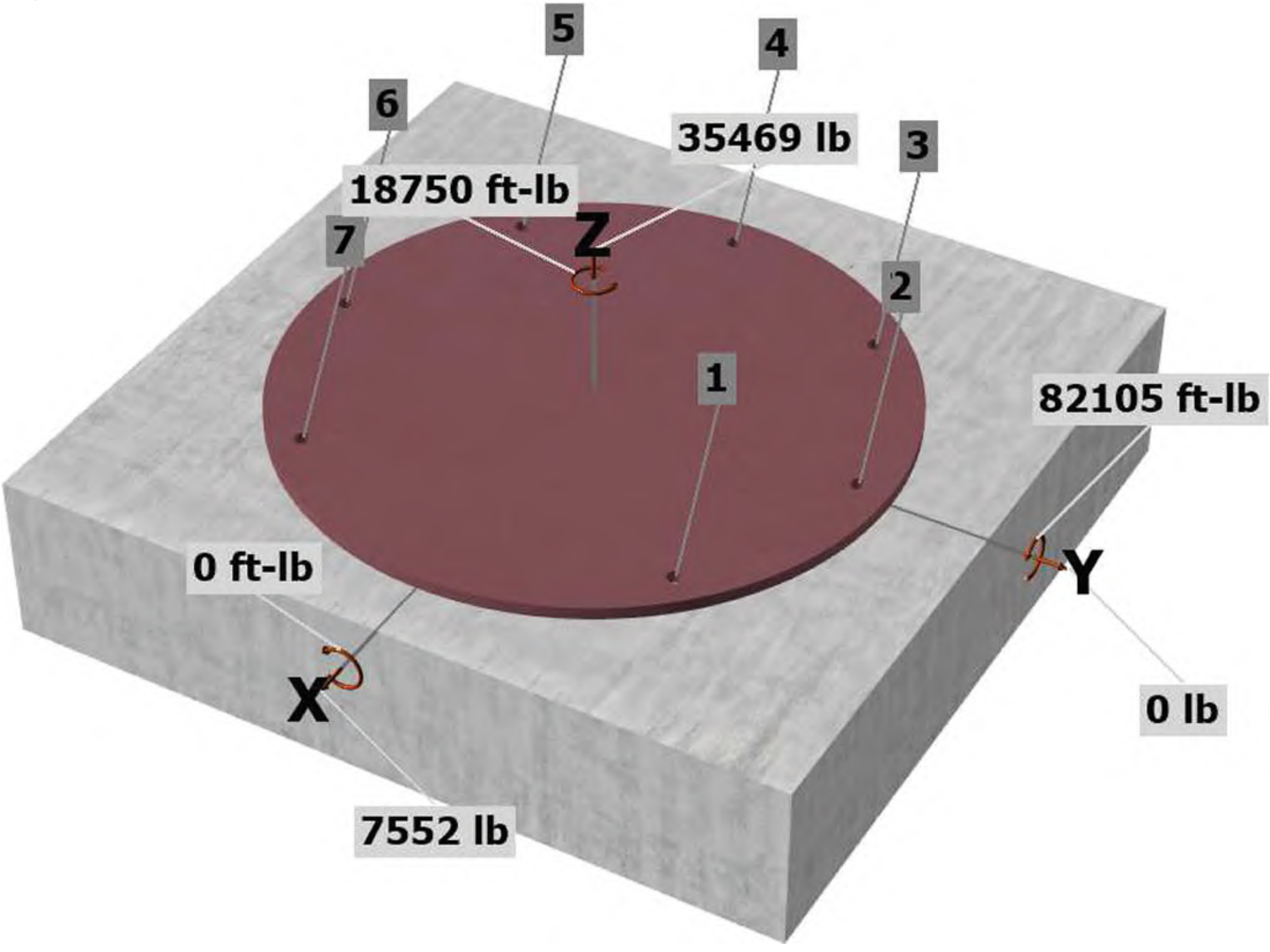

<Figure 2>

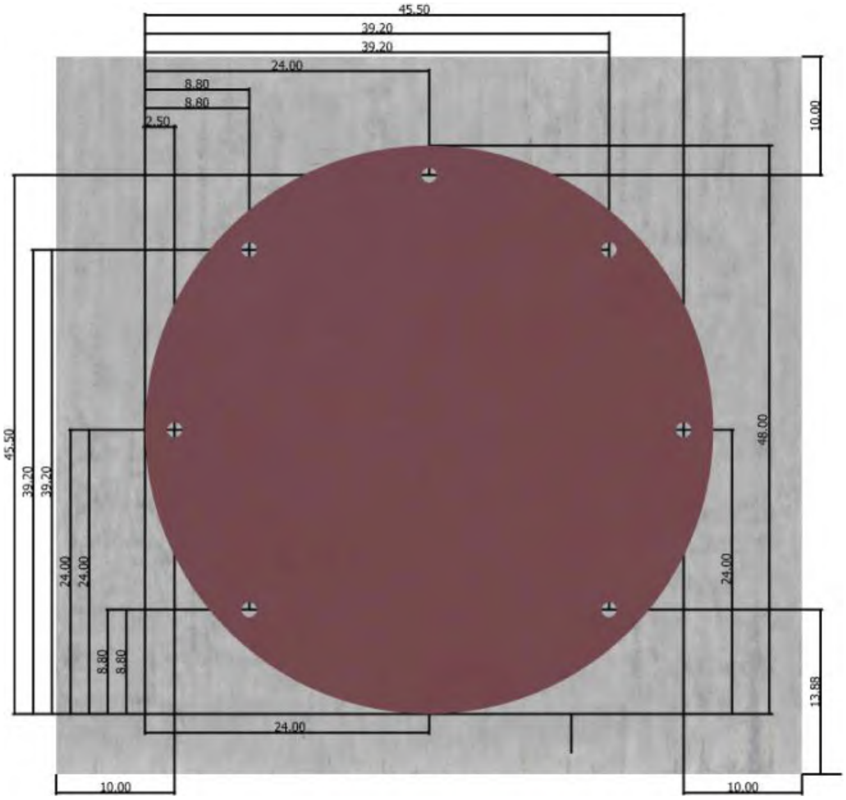
45.50
39.20
39.20
24.00
8.80
8.80
2.50
10.00
45.50
39.20
39.20
48.00
24.00
24.00
24.00
8.80
8.80
24.00
13.88
10.00
10.00

3. Resulting Anchor Forces

Anchor	Tension load, N_{ua} (lb)	Shear load x, V_{uax} (lb)	Shear load y, V_{uay} (lb)	Shear load combined, $\sqrt{(V_{uax})^2+(V_{uay})^2}$ (lb)
1	0.0	-0.3	1297.1	1297.1
2	1033.5	-447.3	218.0	497.6
3	2777.1	-0.3	-861.1	861.1
4	3499.3	1078.9	-1308.1	1695.6
5	2777.1	2158.0	-861.1	2323.4
6	1033.5	2605.0	218.0	2614.1
7	0.0	2158.0	1297.1	2517.8
Sum	11120.5	7552.0	0.0	11806.8

Maximum concrete compression strain (‰): 0.05
Maximum concrete compression stress (psi): 234
Resultant tension force (lb): 11120
Resultant compression force (lb): 46589
Eccentricity of resultant tension forces in x-axis, e'_{Nx} (inch): 0.00
Eccentricity of resultant tension forces in y-axis, e'_{Ny} (inch): 3.98
Eccentricity of resultant shear forces in x-axis, e'_{Vx} (inch): 0.00
Eccentricity of resultant shear forces in y-axis, e'_{Vy} (inch): 0.00

<Figure 3>

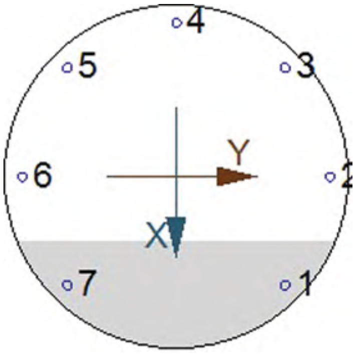

4. Steel Strength of Anchor in Tension (Sec. 17.4.1)

N_{sa} (lb)	ϕ	ϕN_{sa} (lb)
82365	0.75	61774

5. Concrete Breakout Strength of Anchor in Tension (Sec. 17.4.2)

$N_b = 16\lambda_a\sqrt{f'_c}h_{ef}^{5/3}$ (Eq. 17.4.2.2b)

λ_a	f'_c (psi)	h_{ef} (in)	N_b (lb)
1.00	4500	6.667	25346

$0.75\phi N_{cbg} = 0.75\phi\,(A_{Nc}/A_{Nco})\,\Psi_{ec,N}\,\Psi_{ed,N}\,\Psi_{c,N}\,\Psi_{cp,N}N_b$ (Sec. 17.3.1 & Eq. 17.4.2.1b)

A_{Nc} (in^2)	A_{Nco} (in^2)	$c_{a,min}$ (in)	$\Psi_{ec,N}$	$\Psi_{ed,N}$	$\Psi_{c,N}$	$\Psi_{cp,N}$	N_b (lb)	ϕ	$0.75\phi N_{cbg}$ (lb)
1737.06	400.00	10.00	0.715	1.000	1.00	1.000	25346	0.75	44296

6. Pullout Strength of Anchor in Tension (Sec. 17.4.3)

$0.75\phi N_{pn} = 0.75\phi\Psi_{c,P}N_p = 0.75\phi\Psi_{c,P}8A_{brg}f'_c$ (Sec. 17.3.1, Eq. 17.4.3.1 & 17.4.3.4)

$\Psi_{c,P}$	A_{brg} (in^2)	f'_c (psi)	ϕ	$0.75\phi N_{pn}$ (lb)
1.0	2.24	4500	0.70	42279

8. Steel Strength of Anchor in Shear (Sec. 17.5.1)

V_{sa} (lb)	ϕ_{grout}	ϕ	$\phi_{grout}\phi V_{sa}$ (lb)
49420	1.0	0.65	32123

9. Concrete Breakout Strength of Anchor in Shear (Sec. 17.5.2)

Shear perpendicular to edge in y-direction:

$V_{by} = \min|7(l_e / d_a)^{0.2}\sqrt{d_a}\lambda_a\sqrt{f'_c}c_{a1}^{1.5}; 9\lambda_a\sqrt{f'_c}c_{a1}^{1.5}|$ (Eq. 17.5.2.2a & Eq. 17.5.2.2b)

l_e (in)	d_a (in)	λ_a	f'_c (psi)	c_{a1} (in)	V_{by} (lb)
10.00	1.250	1.00	4500	10.00	19092

$\phi V_{cby} = \phi (A_{Vc} / A_{Vco}) \Psi_{ed,V} \Psi_{c,V} \Psi_{h,V} V_{by}$ (Sec. 17.3.1 & Eq. 17.5.2.1a)

A_{Vc} (in^2)	A_{Vco} (in^2)	$\Psi_{ed,V}$	$\Psi_{c,V}$	$\Psi_{h,V}$	V_{by} (lb)	ϕ	ϕV_{cby} (lb)
450.00	450.00	1.000	1.000	1.000	19092	0.75	14319

Shear perpendicular to edge in x-direction:

$V_{bx} = \min|7(l_e / d_a)^{0.2}\sqrt{d_a}\lambda_a\sqrt{f'_c}c_{a1}^{1.5}; 9\lambda_a\sqrt{f'_c}c_{a1}^{1.5}|$ (Eq. 17.5.2.2a & Eq. 17.5.2.2b)

l_e (in)	d_a (in)	λ_a	f'_c (psi)	c_{a1} (in)	V_{bx} (lb)
10.00	1.250	1.00	4500	13.88	31220

$\phi V_{cbgx} = \phi (A_{Vc} / A_{Vco}) \Psi_{ec,V} \Psi_{ed,V} \Psi_{c,V} \Psi_{h,V} V_{bx}$ (Sec. 17.3.1 & Eq. 17.5.2.1b)

A_{Vc} (in^2)	A_{Vco} (in^2)	$\Psi_{ec,V}$	$\Psi_{ed,V}$	$\Psi_{c,V}$	$\Psi_{h,V}$	V_{bx} (lb)	ϕ	ϕV_{cbgx} (lb)
677.39	866.94	1.000	0.935	1.000	1.068	31220	0.75	18268

Shear parallel to edge in x-direction:

$V_{by} = \min|7(l_e / d_a)^{0.2}\sqrt{d_a}\lambda_a\sqrt{f'_c}c_{a1}^{1.5}; 9\lambda_a\sqrt{f'_c}c_{a1}^{1.5}|$ (Eq. 17.5.2.2a & Eq. 17.5.2.2b)

l_e (in)	d_a (in)	λ_a	f'_c (psi)	c_{a1} (in)	V_{by} (lb)
10.00	1.250	1.00	4500	12.17	25622

$\phi V_{cbgx} = \phi (2)(A_{Vc} / A_{Vco}) \Psi_{ec,V} \Psi_{ed,V} \Psi_{c,V} \Psi_{h,V} V_{by}$ (Sec. 17.3.1, 17.5.2.1(c) & Eq. 17.5.2.1b)

A_{Vc} (in^2)	A_{Vco} (in^2)	$\Psi_{ec,V}$	$\Psi_{ed,V}$	$\Psi_{c,V}$	$\Psi_{h,V}$	V_{by} (lb)	ϕ	ϕV_{cbgx} (lb)
1149.75	666.13	1.000	1.000	1.000	1.000	25622	0.75	66335

Shear parallel to edge in y-direction:

$V_{bx} = \min|7(l_e / d_a)^{0.2}\sqrt{d_a}\lambda_a\sqrt{f'_c}c_{a1}^{1.5}; 9\lambda_a\sqrt{f'_c}c_{a1}^{1.5}|$ (Eq. 17.5.2.2a & Eq. 17.5.2.2b)

l_e (in)	d_a (in)	λ_a	f'_c (psi)	c_{a1} (in)	V_{bx} (lb)
10.00	1.250	1.00	4500	12.17	25622

$\phi V_{cby} = \phi (2)(A_{Vc} / A_{Vco}) \Psi_{ed,V} \Psi_{c,V} \Psi_{h,V} V_{bx}$ (Sec. 17.3.1, 17.5.2.1(c) & Eq. 17.5.2.1a)

A_{Vc} (in^2)	A_{Vco} (in^2)	$\Psi_{ed,V}$	$\Psi_{c,V}$	$\Psi_{h,V}$	V_{bx} (lb)	ϕ	ϕV_{cby} (lb)
1105.64	666.13	1.000	1.000	1.000	25622	0.75	63790

10. Concrete Pryout Strength of Anchor in Shear (Sec. 17.5.3)

$\phi V_{cp} = \phi k_{cp} N_{cb} = \phi k_{cp}(A_{Nc} / A_{Nco}) \Psi_{ed,N} \Psi_{c,N} \Psi_{cp,N} N_b$ (Sec. 17.3.1 & Eq. 17.5.3.1a)

k_{cp}	A_{Nc} (in^2)	A_{Nco} (in^2)	$\Psi_{ed,N}$	$\Psi_{c,N}$	$\Psi_{cp,N}$	N_b (lb)	ϕ	ϕV_{cp} (lb)
2.0	442.85	1296.00	0.867	1.000	1.000	67509	0.70	27989

11. Results

Interaction of Tensile and Shear Forces (Sec. 17.6.)

Tension	Factored Load, N_{ua} (lb)	Design Strength, øN_n (lb)	Ratio	Status
Steel	3499	61774	0.06	Pass
Concrete breakout	**11120**	**44296**	**0.25**	**Pass (Governs)**
Pullout	3499	42279	0.08	Pass

Shear	Factored Load, V_{ua} (lb)	Design Strength, øV_n (lb)	Ratio	Status
Steel	2614	32123	0.08	Pass
T Concrete breakout y+	3030	14319	0.21	Pass
T Concrete breakout x+	8000	18268	0.44	Pass
|| Concrete breakout x+	3030	66335	0.05	Pass
|| Concrete breakout y-	8000	63790	0.13	Pass
Concrete breakout, combined	**-**	**-**	**0.49**	**Pass (Governs)**
Pryout	2614	27989	0.09	Pass

Interaction check	$N_{ua}/\phi N_n$	$V_{ua}/\phi V_n$	Combined Ratio	Permissible	Status
Sec. 17.6..2	0.00	0.49	48.6%	1.0	Pass

1 1/4"Ø Heavy Hex Bolt, F593 304/316SS with hef = 12.000 inch meets the selected design criteria.

12. Warnings

- For irregular anchor patterns, the designer must consider sizing of base plate holes to ensure shear loads are distributed to anchors as designed.

- Per designer input, ductility requirements for tension have been determined to be satisfied – designer to verify.

- Per designer input, ductility requirements for shear have been determined to be satisfied – designer to verify.

- Designer must exercise own judgement to determine if this design is suitable.

SIMPSON Strong-Tie®

Anchor Designer™
Software
Version 3.0.7947.0

Company:	LEI	Date:	8/30/2022
Engineer:	JF	Page:	1/5
Project:	21220680.000		
Address:			
Phone:			
E-mail:			

1.Project information

Customer company:
Customer contact name:
Customer e-mail:
Comment:

Project description: Walkway Anchor (Worst Case ASD Design)
Location:
Fastening description:

2. Input Data & Anchor Parameters

General
Design method:ACI 318-14
Units: Imperial units

Anchor Information:
Anchor type: Bonded anchor
Material: F593 304/316SS
Diameter (inch): 0.750
Effective Embedment depth, h_{ef} (inch): 6.000
Code report: ICC-ES ESR-4057
Anchor category: -
Anchor ductility: Yes
h_{min} (inch): 7.75
c_{ac} (inch): 9.10
C_{min} (inch): 1.75
S_{min} (inch): 3.00

Base Material
Concrete: Normal-weight
Concrete thickness, h (inch): 47.25
State: Cracked
Compressive strength, f'_c (psi): 3000
$\Psi_{c,V}$: 1.0
Reinforcement condition: A tension, A shear
Supplemental reinforcement: Not applicable
Reinforcement provided at corners: No
Ignore concrete breakout in tension: No
Ignore concrete breakout in shear: No
Hole condition: Dry concrete
Inspection: Periodic
Temperature range, Short/Long: 150/110°F
Ignore 6do requirement: Not applicable
Build-up grout pad: Yes

Base Plate
Length x Width x Thickness (inch): 6.00 x 7.75 x 0.50

Recommended Anchor
Anchor Name: SET-3G - SET-3G w/ 3/4"Ø F593 CW (304/316SS)
Code Report: ICC-ES ESR-4057

Company:	LEI	Date:	8/30/2022
Engineer:	JF	Page:	2/5
Project:	21220680.000		
Address:			
Phone:			
E-mail:			

Load and Geometry
Load factor source: ACI 318 Section 5.3
Load combination: not set
Seismic design: No
Anchors subjected to sustained tension: No
Apply entire shear load at front row: No
Anchors only resisting wind and/or seismic loads: No

Strength level loads:

N_{ua} [lb]: -2448
V_{uax} [lb]: 0
V_{uay} [lb]: 474
M_{ux} [ft-lb]: 0
M_{uy} [ft-lb]: 0
M_{uz} [ft-lb]: 0

<Figure 1>

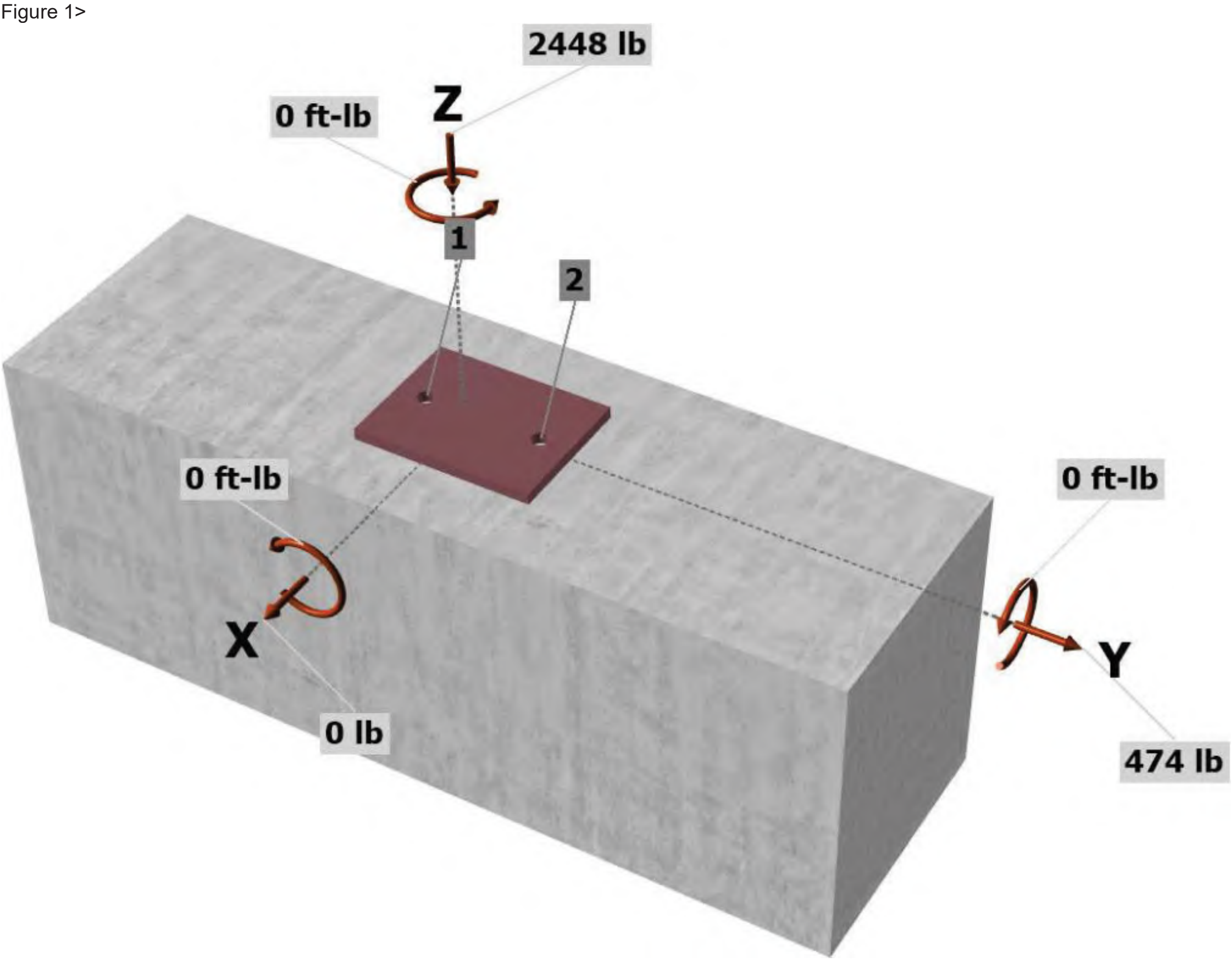

<Figure 2>

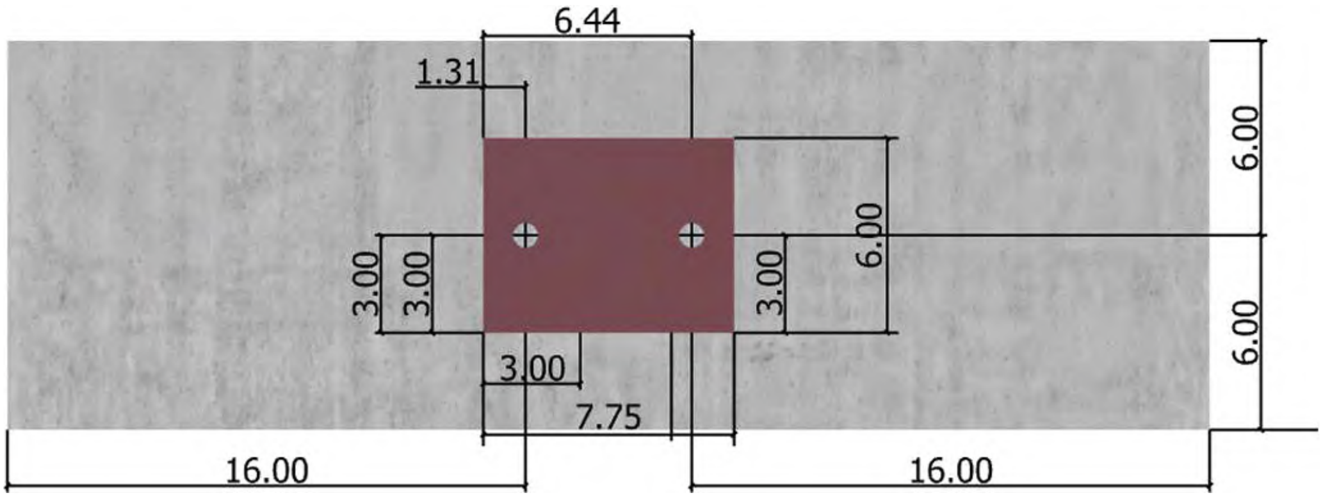
6.44
1.31
6.00
6.00
3.00
3.00
6.00
3.00
3.00
7.75
16.00
16.00

3. Resulting Anchor Forces

Anchor	Tension load, N_{ua} (lb)	Shear load x, V_{uax} (lb)	Shear load y, V_{uay} (lb)	Shear load combined, $\sqrt{(V_{uax})^2+(V_{uay})^2}$ (lb)
1	0.0	0.0	237.0	237.0
2	0.0	0.0	237.0	237.0
Sum	0.0	0.0	474.0	474.0

Maximum concrete compression strain (‰): 0.02
Maximum concrete compression stress (psi): 88
Resultant tension force (lb): 0
Resultant compression force (lb): 2448
Eccentricity of resultant tension forces in x-axis, e'_{Nx} (inch): 0.00
Eccentricity of resultant tension forces in y-axis, e'_{Ny} (inch): 0.00
Eccentricity of resultant shear forces in x-axis, e'_{Vx} (inch): 0.00
Eccentricity of resultant shear forces in y-axis, e'_{Vy} (inch): 0.00

8. Steel Strength of Anchor in Shear (Sec. 17.5.1)

V_{sa} (lb)	ϕ_{grout}	ϕ	$\phi_{grout}\phi V_{sa}$ (lb)
17035	0.8	0.65	8858

9. Concrete Breakout Strength of Anchor in Shear (Sec. 17.5.2)

Shear perpendicular to edge in y-direction:

$V_{by} = \min|7(l_e / d_a)^{0.2}\sqrt{d_a}\lambda_a\sqrt{f'_c}c_{a1}^{1.5}; 9\lambda_a\sqrt{f'_c}c_{a1}^{1.5}|$ (Eq. 17.5.2.2a & Eq. 17.5.2.2b)

l_e (in)	d_a (in)	λ_a	f'_c (psi)	c_{a1} (in)	V_{by} (lb)
6.00	0.750	1.00	3000	16.00	31549

$\phi V_{cby} = \phi\,(A_{Vc} / A_{Vco})\,\Psi_{ed,V}\Psi_{c,V}\Psi_{h,V}V_{by}$ (Sec. 17.3.1 & Eq. 17.5.2.1a)

A_{Vc} (in^2)	A_{Vco} (in^2)	$\Psi_{ed,V}$	$\Psi_{c,V}$	$\Psi_{h,V}$	V_{by} (lb)	ϕ	ϕV_{cby} (lb)
288.00	1152.00	0.775	1.000	1.000	31549	0.75	4584

Shear parallel to edge in x-direction:

$V_{by} = \min|7(l_e / d_a)^{0.2}\sqrt{d_a}\lambda_a\sqrt{f'_c}c_{a1}^{1.5}; 9\lambda_a\sqrt{f'_c}c_{a1}^{1.5}|$ (Eq. 17.5.2.2a & Eq. 17.5.2.2b)

l_e (in)	d_a (in)	λ_a	f'_c (psi)	c_{a1} (in)	V_{by} (lb)
6.00	0.750	1.00	3000	6.00	7245

$\phi V_{cbgx} = \phi\,(2)(A_{Vc} / A_{Vco})\,\Psi_{ec,V}\Psi_{ed,V}\Psi_{c,V}\Psi_{h,V}V_{by}$ (Sec. 17.3.1, 17.5.2.1(c) & Eq. 17.5.2.1b)

A_{Vc} (in^2)	A_{Vco} (in^2)	$\Psi_{ec,V}$	$\Psi_{ed,V}$	$\Psi_{c,V}$	$\Psi_{h,V}$	V_{by} (lb)	ϕ	ϕV_{cbgx} (lb)
208.17	162.00	1.000	1.000	1.000	1.000	7245	0.75	13964

10. Concrete Pryout Strength of Anchor in Shear (Sec. 17.5.3)

$\phi V_{cpg} = \phi \min|k_{cp}N_{ag}\ ;\ k_{cp}N_{cbg}| = \phi \min|k_{cp}(A_{Na} / A_{Na0})\Psi_{ec,Na}\Psi_{ed,Na}\Psi_{cp,Na}N_{ba}\ ;\ k_{cp}(A_{Nc} / A_{Nco})\Psi_{ec,N}\Psi_{ed,N}\Psi_{c,N}\Psi_{cp,N}N_{b}|$ (Sec. 17.3.1 & Eq. 17.5.3.1b)

k_{cp}	A_{Na} (in^2)	A_{Na0} (in^2)	$\Psi_{ed,Na}$	$\Psi_{ec,Na}$	$\Psi_{cp,Na}$	N_{ba} (lb)	N_a (lb)
2.0	308.12	422.18	0.875	1.000	1.000	19348	12359

A_{Nc} (in^2)	A_{Nco} (in^2)	$\Psi_{ec,N}$	$\Psi_{ed,N}$	$\Psi_{c,N}$	$\Psi_{cp,N}$	N_b (lb)	N_{cb} (lb)	ϕ
277.56	324.00	1.000	0.900	1.000	1.000	13685	10551	0.70

ϕV_{cpg} (lb)
14771

11. Results

11. Interaction of Tensile and Shear Forces (Sec. D.7)?

Shear	Factored Load, V_{ua} (lb)	Design Strength, $øV_n$ (lb)	Ratio	Status
Steel	237	8858	0.03	Pass
T Concrete breakout y+	**474**	**4584**	**0.10**	**Pass (Governs)**
|| Concrete breakout x-	**474**	**13964**	**0.03**	**Pass (Governs)**
Pryout	474	14771	0.03	Pass

SET-3G w/ 3/4"Ø F593 CW (304/316SS) with hef = 6.000 inch meets the selected design criteria.

12. Warnings

- Designer must exercise own judgement to determine if this design is suitable.

- Refer to manufacturer’s product literature for hole cleaning and installation instructions.

1.Project information

Customer company:
Customer contact name:
Customer e-mail:
Comment: Top Scum Box Anchor(Worst Case)

Project description:
Location:
Fastening description:

2. Input Data & Anchor Parameters

General
Design method:ACI 318-14
Units: Imperial units

Anchor Information:
Anchor type: Bonded anchor
Material: F593 304/316SS
Diameter (inch): 0.625
Effective Embedment depth, h_{ef} (inch): 5.000
Code report: ICC-ES ESR-4057
Anchor category: -
Anchor ductility: Yes
h_{min} (inch): 6.38
c_{ac} (inch): 10.96
C_{min} (inch): 1.75
S_{min} (inch): 3.00

Base Material
Concrete: Normal-weight
Concrete thickness, h (inch): 8.00
State: Cracked
Compressive strength, f'c (psi): 3000
$\Psi_{c,V}$: 1.0
Reinforcement condition: A tension, A shear
Supplemental reinforcement: Not applicable
Reinforcement provided at corners: No
Ignore concrete breakout in tension: No
Ignore concrete breakout in shear: No
Hole condition: Dry concrete
Inspection: Periodic
Temperature range, Short/Long: 150/110°F
Ignore 6do requirement: Not applicable
Build-up grout pad: Yes

Base Plate
Length x Width x Thickness (inch): 4.25 x 4.25 x 0.25

Recommended Anchor
Anchor Name: SET-3G - SET-3G w/ 5/8"Ø F593 CW (304/316SS)
Code Report: ICC-ES ESR-4057

Company:	LEI	Date:	8/29/2022
Engineer:	JF	Page:	2/5
Project:	2122680.000		
Address:			
Phone:			
E-mail:			

Load and Geometry
Load factor source: ACI 318 Section 5.3
Load combination: not set
Seismic design: Yes
Anchors subjected to sustained tension: No
Ductility section for tension: 17.2.3.4.3 (d) is satisfied
Ductility section for shear: 17.2.3.5.3 (c) is satisfied
Ω_0 factor: not set
Apply entire shear load at front row: No
Anchors only resisting wind and/or seismic loads: No

Strength level loads:

N_{ua} [lb]: 554
V_{uax} [lb]: 59
V_{uay} [lb]: 16
M_{ux} [ft-lb]: 0
M_{uy} [ft-lb]: 0

<Figure 1>

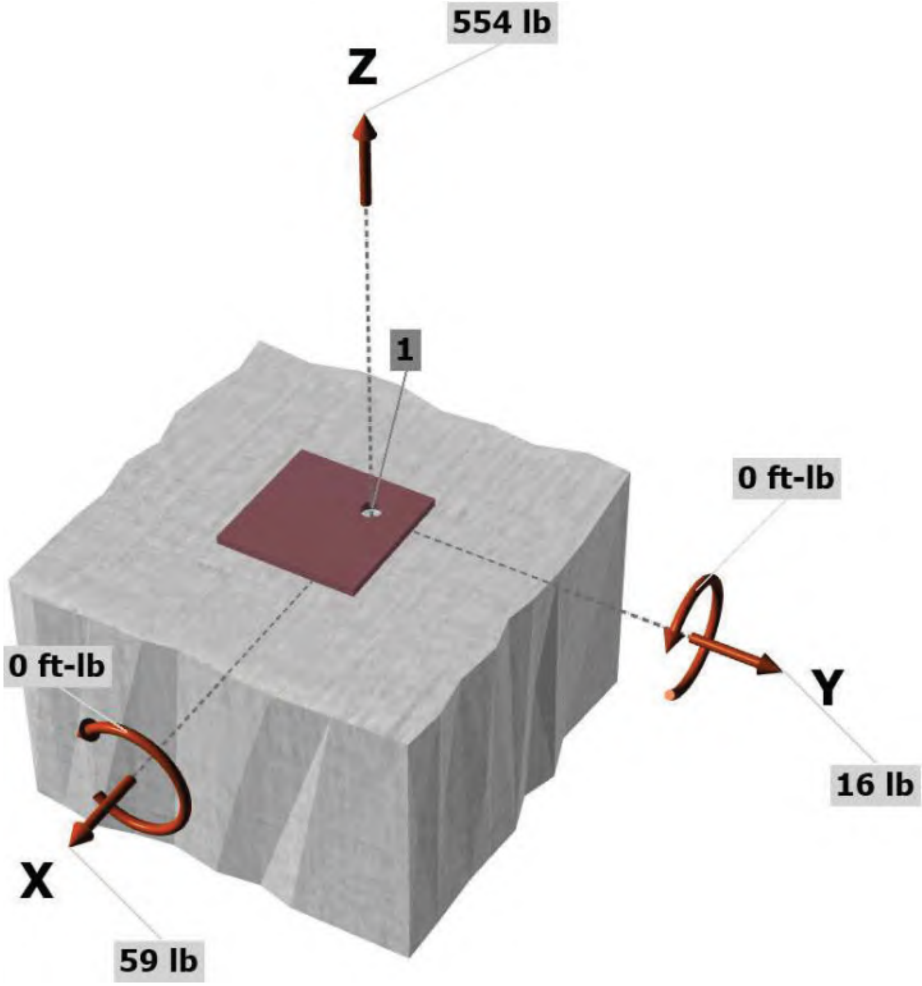

Company:	LEI	Date:	8/29/2022
Engineer:	JF	Page:	3/5
Project:	2122680.000		
Address:			
Phone:			
E-mail:			

<Figure 2>

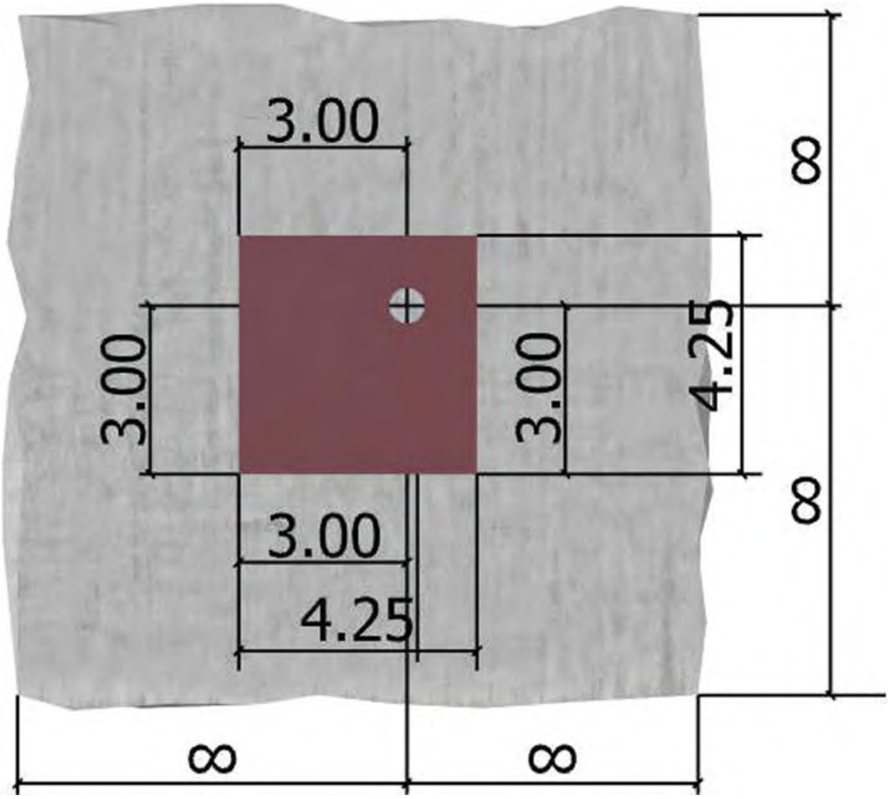

3. Resulting Anchor Forces

Anchor	Tension load, N_{ua} (lb)	Shear load x, V_{uax} (lb)	Shear load y, V_{uay} (lb)	Shear load combined, $\sqrt{(V_{uax})^2+(V_{uay})^2}$ (lb)
1	554.0	59.0	16.0	61.1
Sum	554.0	59.0	16.0	61.1

Maximum concrete compression strain (‰): 0.00
Maximum concrete compression stress (psi): 0
Resultant tension force (lb): 554
Resultant compression force (lb): 0
Eccentricity of resultant tension forces in x-axis, e'_{Nx} (inch): 0.00
Eccentricity of resultant tension forces in y-axis, e'_{Ny} (inch): 0.00
Eccentricity of resultant shear forces in x-axis, e'_{Vx} (inch): 0.00
Eccentricity of resultant shear forces in y-axis, e'_{Vy} (inch): 0.00

<Figure 3>

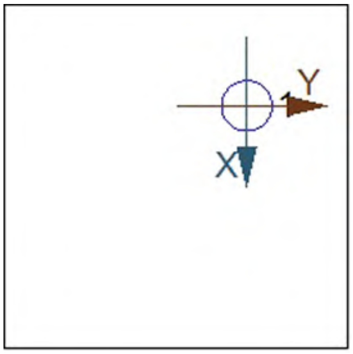

4. Steel Strength of Anchor in Tension (Sec. 17.4.1)

N_{sa} (lb)	ϕ	ϕN_{sa} (lb)
22600	0.75	16950

5. Concrete Breakout Strength of Anchor in Tension (Sec. 17.4.2)

$N_b = k_c \lambda_a \sqrt{f'_c} h_{ef}^{1.5}$ (Eq. 17.4.2.2a)

k_c	λ_a	f'_c (psi)	h_{ef} (in)	N_b (lb)
17.0	1.00	3000	5.000	10410

$0.75\phi N_{cb} = 0.75\phi\,(A_{Nc} / A_{Nco})\,\Psi_{ed,N}\,\Psi_{c,N}\,\Psi_{cp,N} N_b$ (Sec. 17.3.1 & Eq. 17.4.2.1a)

A_{Nc} (in^2)	A_{Nco} (in^2	$c_{a,min}$ (in)	$\Psi_{ed,N}$	$\Psi_{c,N}$	$\Psi_{cp,N}$	N_b (lb)	ϕ	$0.75\phi N_{cb}$ (lb)
225.00	225.00	-	1.000	1.00	1.000	10410	0.75	5856

6. Adhesive Strength of Anchor in Tension (Sec. 17.4.5)

$\tau_{k,cr} = \tau_{k,cr} f_{short\text{-}term} K_{sat} (f'_c / 2{,}500)^n \alpha_{N.seis}$

$\tau_{k,cr}$ (psi)	$f_{short\text{-}term}$	K_{sat}	$\alpha_{N.seis}$	f'_c (psi)	n	$\tau_{k,cr}$ (psi)
1356	1.00	1.00	1.00	3000	0.24	1417

$N_{ba} = \lambda_a \tau_{cr} \pi d_a h_{ef}$ (Eq. 17.4.5.2)

λ_a	τ_{cr} (psi)	d_a (in)	h_{ef} (in)	N_{ba} (lb)
1.00	1417	0.63	5.000	13908

$0.75\phi N_a = 0.75\phi\,(A_{Na} / A_{Na0})\,\Psi_{ed,Na}\,\Psi_{cp,Na} N_{ba}$ (Sec. 17.3.1 & Eq. 17.4.5.1a)

A_{Na} (in^2)	A_{Na0} (in^2)	c_{Na} (in)	$c_{a,min}$ (in)	$\Psi_{ed,Na}$	$\Psi_{p,Na}$	N_{a0} (lb)	ϕ	$0.75\phi N_a$ (lb)
307.10	307.10	8.76	-	1.000	1.000	13908	0.65	6780

8. Steel Strength of Anchor in Shear (Sec. 17.5.1)

V_{sa} (lb)	ϕ_{grout}	ϕ	$\alpha_{V,seis}$	$\phi_{grout}\alpha_{V,seis}\phi V_{sa}$ (lb)
13560	0.8	0.65	0.75	5288

10. Concrete Pryout Strength of Anchor in Shear (Sec. 17.5.3)

$\phi V_{cp} = \phi\,\mathrm{min}|k_{cp}N_a\ ;\ k_{cp}N_{cb}| = \phi\,\mathrm{min}|k_{cp}(A_{Na}\,/\,A_{Na0})\,\Psi_{ed,Na}\,\Psi_{cp,Na}N_{ba}\ ;\ k_{cp}(A_{Nc}\,/\,A_{Nco})\,\Psi_{ed,N}\,\Psi_{c,N}\,\Psi_{cp,N}N_b|$ (Sec. 17.3.1 & Eq. 17.5.3.1a)

k_{cp}	A_{Na} (in^2)	A_{Na0} (in^2)	$\Psi_{ed,Na}$	$\Psi_{cp,Na}$	N_{ba} (lb)	N_a (lb)
2.0	307.10	307.10	1.000	1.000	13908	13908

A_{Nc} (in^2)	A_{Nco} (in^2)	$\Psi_{ed,N}$	$\Psi_{c,N}$	$\Psi_{cp,N}$	N_b (lb)	N_{cb} (lb)	ϕ	ϕV_{cp} (lb)
225.00	225.00	1.000	1.000	1.000	10410	10410	0.70	14574

11. Results

Interaction of Tensile and Shear Forces (Sec. 17.6.)

Tension	Factored Load, N_{ua} (lb)	Design Strength, $øN_n$ (lb)	Ratio	Status
Steel	554	16950	0.03	Pass
Concrete breakout	**554**	**5856**	**0.09**	**Pass (Governs)**
Adhesive	554	6780	0.08	Pass

Shear	Factored Load, V_{ua} (lb)	Design Strength, $øV_n$ (lb)	Ratio	Status
Steel	**61**	**5288**	**0.01**	**Pass (Governs)**
Pryout	61	14574	0.00	Pass

Interaction check	$N_{ua}/\phi N_n$	$V_{ua}/\phi V_n$	Combined Ratio	Permissible	Status
Sec. 17.6..1	0.09	0.00	9.5%	1.0	Pass

SET-3G w/ 5/8"Ø F593 CW (304/316SS) with hef = 5.000 inch meets the selected design criteria.

12. Warnings

- Per designer input, ductility requirements for tension have been determined to be satisfied – designer to verify.

- Per designer input, ductility requirements for shear have been determined to be satisfied – designer to verify.

- Designer must exercise own judgement to determine if this design is suitable.

- Refer to manufacturer’s product literature for hole cleaning and installation instructions.

Anchor Designer™
Software
Version 3.0.7947.0

Company:	LEI	Date:	8/29/2022
Engineer:	JF	Page:	1/5
Project:	2122680.000		
Address:			
Phone:			
E-mail:			

1.Project information

Customer company:
Customer contact name:
Customer e-mail:
Comment: Bottom Scum Box Anchor(Worst Case)

Project description:
Location:
Fastening description:

2. Input Data & Anchor Parameters

General
Design method:ACI 318-14
Units: Imperial units

Anchor Information:
Anchor type: Bonded anchor
Material: F593 304/316SS
Diameter (inch): 0.625
Effective Embedment depth, h_{ef} (inch): 5.000
Code report: ICC-ES ESR-4057
Anchor category: -
Anchor ductility: Yes
h_{min} (inch): 6.38
c_{ac} (inch): 10.96
C_{min} (inch): 1.75
S_{min} (inch): 3.00

Base Material
Concrete: Normal-weight
Concrete thickness, h (inch): 8.00
State: Cracked
Compressive strength, f'_c (psi): 3000
$\Psi_{c,V}$: 1.0
Reinforcement condition: A tension, A shear
Supplemental reinforcement: Not applicable
Reinforcement provided at corners: No
Ignore concrete breakout in tension: No
Ignore concrete breakout in shear: No
Hole condition: Dry concrete
Inspection: Periodic
Temperature range, Short/Long: 150/110°F
Ignore 6do requirement: Not applicable
Build-up grout pad: Yes

Base Plate
Length x Width x Thickness (inch): 4.25 x 4.25 x 0.25

Recommended Anchor
Anchor Name: SET-3G - SET-3G w/ 5/8"Ø F593 CW (304/316SS)
Code Report: ICC-ES ESR-4057

Company:	LEI	Date:	8/29/2022
Engineer:	JF	Page:	2/5
Project:	2122680.000		
Address:			
Phone:			
E-mail:			

Load and Geometry
Load factor source: ACI 318 Section 5.3
Load combination: not set
Seismic design: Yes
Anchors subjected to sustained tension: No
Ductility section for tension: 17.2.3.4.3 (d) is satisfied
Ductility section for shear: 17.2.3.5.3 (c) is satisfied
Ω_0 factor: not set
Apply entire shear load at front row: No
Anchors only resisting wind and/or seismic loads: No

Strength level loads:

N_{ua} [lb]: -546
V_{uax} [lb]: 5
V_{uay} [lb]: 350
M_{ux} [ft-lb]: 0
M_{uy} [ft-lb]: 0

<Figure 1>

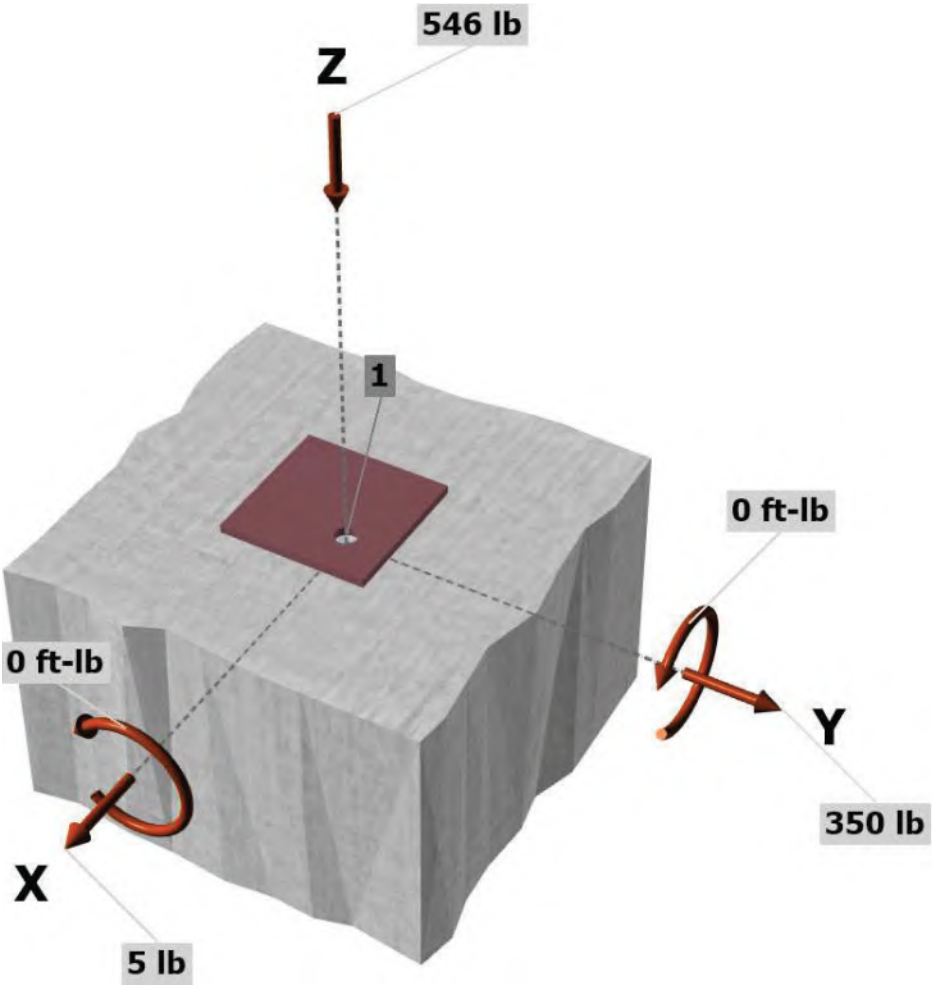

Company:	LEI	Date:	8/29/2022
Engineer:	JF	Page:	3/5
Project:	2122680.000		
Address:			
Phone:			
E-mail:			

<Figure 2>

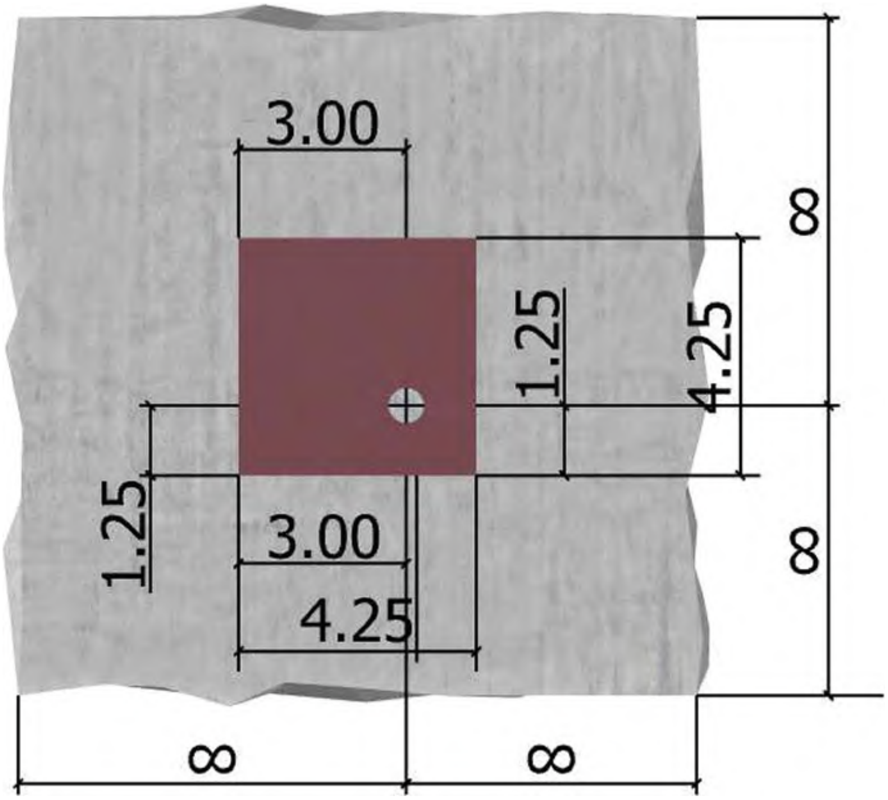

3. Resulting Anchor Forces

Anchor	Tension load, N_{ua} (lb)	Shear load x, V_{uax} (lb)	Shear load y, V_{uay} (lb)	Shear load combined, $\sqrt{(V_{uax})^2+(V_{uay})^2}$ (lb)
1	0.0	5.0	350.0	350.0
Sum	0.0	5.0	350.0	350.0

Maximum concrete compression strain (‰): 0.00
Maximum concrete compression stress (psi): 0
Resultant tension force (lb): 0
Resultant compression force (lb): 0
Eccentricity of resultant tension forces in x-axis, e'_{Nx} (inch): 0.00
Eccentricity of resultant tension forces in y-axis, e'_{Ny} (inch): 0.00
Eccentricity of resultant shear forces in x-axis, e'_{Vx} (inch): 0.00
Eccentricity of resultant shear forces in y-axis, e'_{Vy} (inch): 0.00

<Figure 3>

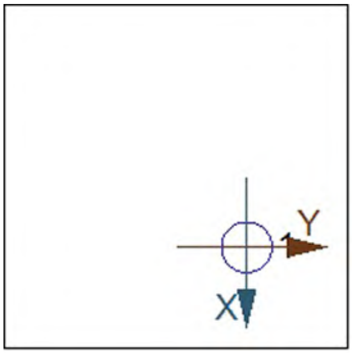

8. Steel Strength of Anchor in Shear (Sec. 17.5.1)

V_{sa} (lb)	ϕ_{grout}	ϕ	$\alpha_{V,seis}$	$\phi_{grout}\alpha_{V,seis}\phi V_{sa}$ (lb)
13560	0.8	0.65	0.75	5288

10. Concrete Pryout Strength of Anchor in Shear (Sec. 17.5.3)

$\phi V_{cp} = \phi \min|k_{cp}N_a ; k_{cp}N_{cb}| = \phi \min|k_{cp}(A_{Na} / A_{Na0})\Psi_{ed,Na}\Psi_{cp,Na}N_{ba} ; k_{cp}(A_{Nc} / A_{Nco})\Psi_{ed,N}\Psi_{c,N}\Psi_{cp,N}N_b|$ (Sec. 17.3.1 & Eq. 17.5.3.1a)

k_{cp}	A_{Na} (in^2)	A_{Na0} (in^2)	$\Psi_{ed,Na}$	$\Psi_{cp,Na}$	N_{ba} (lb)	N_a (lb)
2.0	307.10	307.10	1.000	1.000	13908	13908

A_{Nc} (in^2)	A_{Nco} (in^2)	$\Psi_{ed,N}$	$\Psi_{c,N}$	$\Psi_{cp,N}$	N_b (lb)	N_{cb} (lb)	ϕ	ϕV_{cp} (lb)
225.00	225.00	1.000	1.000	1.000	10410	10410	0.70	14574

11. Results

11. Interaction of Tensile and Shear Forces (Sec. D.7)?

Shear	Factored Load, V_{ua} (lb)	Design Strength, $øV_n$ (lb)	Ratio	Status
Steel	**350**	**5288**	**0.07**	**Pass (Governs)**
Pryout	350	14574	0.02	Pass

SET-3G w/ 5/8"Ø F593 CW (304/316SS) with hef = 5.000 inch meets the selected design criteria.

12. Warnings

- Per designer input, ductility requirements for tension have been determined to be satisfied – designer to verify.

- Per designer input, ductility requirements for shear have been determined to be satisfied – designer to verify.

- Designer must exercise own judgement to determine if this design is suitable.

- Refer to manufacturer’s product literature for hole cleaning and installation instructions.

Larson Engineering, Inc.
1488 Bond Street, Suite 100
Naperville, IL 60563-6503
630.357.0540   Fax: 630.357.0164
www.larsonengr.com

Larson

Clarifiers Walkway, Scum Box, Drive Shaft, and Rake Arms
Cottage Grove, OR

Appendix

NOTES:

JOB:	22-008 - COTTAGE GROVE, OR
CONTRACTOR:	-
ENGINEER:	-
PROJECT NO:	22-008
SPECIFICATION NO:	11338
TYPE:	CAGE DRIVEN SPIRAL BLADE CLARIFIER
MODEL NUMBER:	CCSO.085
DESIGNATION NUMBER:	FW09.S4.MPWT

ALLOWABLE STRESS VALUES USED IN THE STRUCTURAL STEEL DESIGN SHALL NOT EXCEED ALLOWABLE STRESSES, AS DEFINED BY CURRENT AISC STANDARDS.

ALL WELDING SHALL BE PERFORMED IN ACCORDANCE WITH THE LATEST EDITION OF A.W.S. WELDING PROCEDURES WITH QUALIFICATION RECORDS PER A.W.S. D1.1, D1.2, D1.6.

ALL STRUCTURAL SHAPES AND PLATES TO BE PER ASTM A276 AND SHALL HAVE A MINIMUM THICKNESS OF 1/4" UNLESS OTHERWISE NOTED.

DRIVE TORQUE (FT-LBS):

CONTINUOUS:	15,000
ALARM:	15,000
CUT-OUT:	18,750
CUT-OUT2:	21,000
MECHANISM DESIGN:	30,000

DESIGN CRITERIA:

WALKWAY:	
LIVE LOAD:	60 LBS/SQFT.
DEFLECTION:	L/360 (MAXIMUM)

SURFACE PREPARATION:

SUBMERGED:	ASTM A380
NON-SUBMERGED:	SSPC-SP6

SHOP COATING:

SUBMERGED:	NA
NON-SUBMERGED:	1 PRIME COAT TNEMEC SERIES N69 EPOXOLINE (6-8 MILS) 1 FINAL COAT TNEMEC SERIES 73 ENDURA SHEILD (2-6 MILS)
COLOR:	TBD
DRIVE UNIT:	SEE DRIVE GENERAL ARRANGEMENT

MATERIAL:

ANCHOR BOLTS:	316 SS
FASTENERS:	
STRUCTURAL CONNECTIONS:	316 SS
SKIMMER, SQUEEQEES & HANDRAIL:	316 SS
MECHANISM:	
SQUEEGEES:	304 SS
OTHER COMPONENTS:	304 SS
WALKWAY:	CARBON STEEL

HANDRAIL:
1-1/2" SCH 40 ALUMINUM COMPONENT RAILING WITH TOEPLATE

GRATING:
1-1/4" ALUMINUM I-BAR GRATING ON WALKWAY
1/4" THICK ALUMINUM CHECKERED PLATE ON PLATFORM

PROJECT DRAWING SHEETS:

DRG.	SHEET NO.	DESCRIPTION
100	1 OF 1	GENERAL ARRANGEMENT
101	1 OF 1	GENERAL ARRANGEMENT CONTINUED
102	1 OF 1	CENTER COLUMN MOUNTING DETAILS
103	1 OF 1	WALKWAY MOUNTING DETAILS
104	1 OF 1	SCUM BOX MOUNTING DETAILS
105	1 OF 1	SKIMMER ASSEMBLY
106	1 OF 2	GENERAL NOTES
106	2 OF 2	GENERAL NOTES
		DRIVE UNIT C31

OPERATION AND MAINTENANCE MANUALS (O&M): 1 ELECTRONIC COPY

SPARE PARTS:
PER (DRIVE MANUFACTURER) SPARES:
ONE (1) SET OF GASKETS
ONE (1) YEAR SUPPLY OF LUBRICANTS.

CLEARSTREAM SPARES:
ONE (1) SET OF SPRINGS, WIPERS FOR SKIMMER.

REV.	DESCRIPTION	DRAWN	APPROV.	DATE
0	INITIAL RELEASE	JM	TSH	5/22

9090 SOUTH 300 WEST
SANDY, UT 84070
OFFICE: (801) 676-1890
FAX: (801) 676-1893

UNLESS OTHERWISE SPECIFIED:
DIMENSIONS ARE IN INCHES
WEIGHTS ARE IN LBS
TOLERANCES (I.A.W. AWS D1.1, AISC CODE OF STD PRACTICE):
FRACTIONAL: ±1/8"
HOLE LOCATION: ±1/32'

MATERIAL:	N/A
WEIGHT EACH:	N/A
NUMBER OF MECHANISMS:	1
TOTAL WEIGHT:	N/A

	NAME	DATE
DRAWN	JM	5/22
CHECKED	TSH	5/22
ENG APPR.	TSH	5/22
FAB INSP.		

DO NOT SCALE DRAWING
MODEL NUMBER:
DESIGNATION:

Cottage Grove
TITLE:
GENERAL NOTES

SIZE	DWG. / PART NO.	REV
D	106	0

SCALE: 1:1
SHEET 1 OF 2

D 22-008 REV 0

DRIVE UNIT

SUBMITTAL

COTTAGE GROVE, OR

EQUIPMENT:

CAGE DRIVE UNIT
MODEL: C31-009A-1382.1

SERIAL NUMBER: 22008-01

MANUFACTURER:

PRECISION ROTATING EQUIPMENT
9090 S 300 W
SANDY, UTAH 84070
801.949.2083 OFFICE
www.premfg.net

JOB NUMBER:

22008

MAY 2022

TABLE OF CONTENTS

DRIVE SUMMARY

DRIVE UNIT SCOPE OF SUPPLY

PRE Number 22008
Customer ClearStream Environmental, Inc
Project Name COTTAGE GROVE, OR

Description:

C31 Cage drive unit with fabricated steel housing and main precision bearing. Also included is our standard Planetary/helical speed reducer design with two-switch overload control contained within NEMA 4X enclosure

Specified Data

15,000	ft*lbs	continuous torque
15,000	ft*lbs	alarm torque
18,750	ft*lbs	cutoff torque
21,000	ft*lbs	secondary cutoff torque
30,000	ft*lbs	ultimate torque
0.044	rpm	drive unit output speed
1.25	Minimum required SF	

Rake Drive Train Summary

Main Gear and Pinion

78 teeth main gear
15 teeth pinion
1 number of pinions

Planetary Speed Reducer

77.7 Ratio
Required Rating:
34,615 in*lbs at 100000 L10 life
71,030 in*lbs allowable rating
SF 2.05 > 1.25 required

Primary Speed Reducer

97.22 Ratio
Required Rating:
446 in*lbs
3,530 in*lbs allowable
SF 7.92 > 1.25 required

Motor:

0.75 hp TEFC 1800rpm
230/460/3/60 supply service

Spare Parts
3 spare Shear pins
1 set bearings and seals for primary reducer
1 set bearings and seals for Secondary reducer
1 year of lubricants

GENERAL ARRANGEMENT DRAWINGS

DRIVE SUMMARY INFORMATION		
CONTINUOUS TORQUE	15,000	100%
ALARM TORQUE	15,000	100%
CUTOUT TORQUE 1	18,750	125%
CUTOUT TORQUE 2	21,000	140%
MOTOR	3/4HP, 230/460/3/60, 1735 RPM	
DRIVE OUTPUT	.044	
ROTATION	CLOCKWISE (LOOKING DOWN)	

PART DESCRIPTION	
ITEM NO.	PART NAME
1	PRIMARY REDUCER
2	TORQUE BOX
3	SECONDARY REDUCER
4	COVER
5	BRIDGE PADS
6	OIL FILL CAP
7	CAGE ADAPTER
8	DRIVE BASE

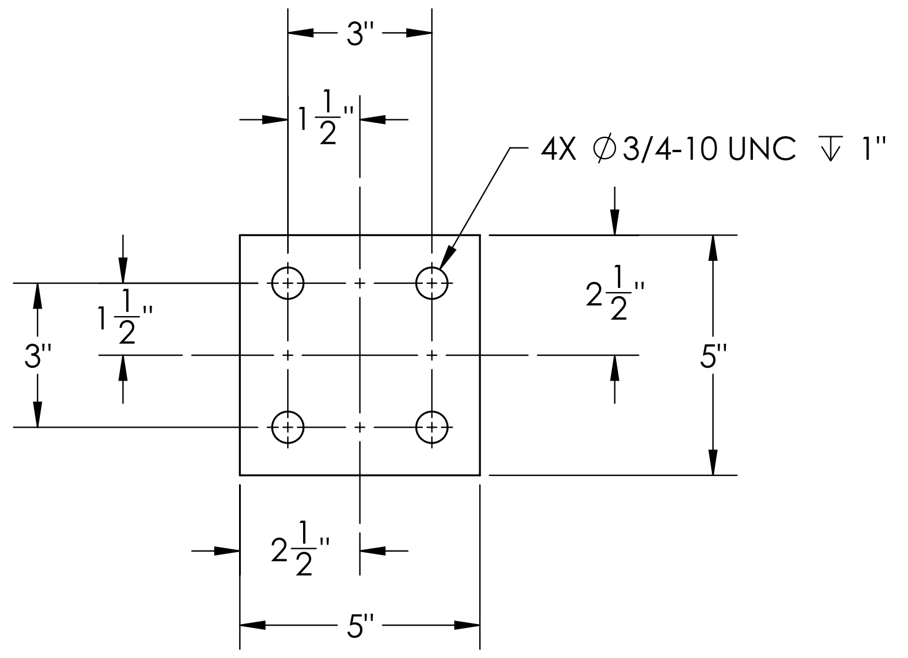

DETAIL B
(SOME COMPONENTS REMOVED FOR CLARITY)
SCALE 1 : 4

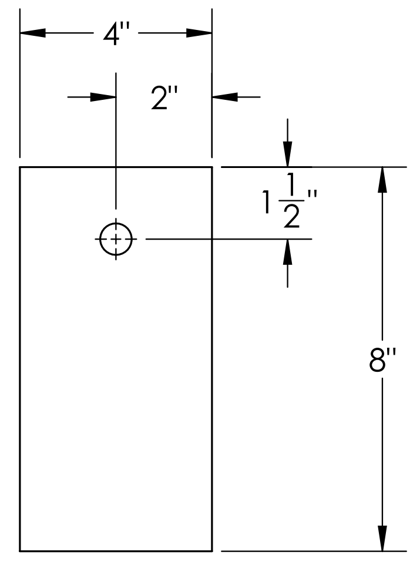

DETAIL C
(SOME COMPONENTS REMOVED FOR CLARITY)
SCALE 1 : 4

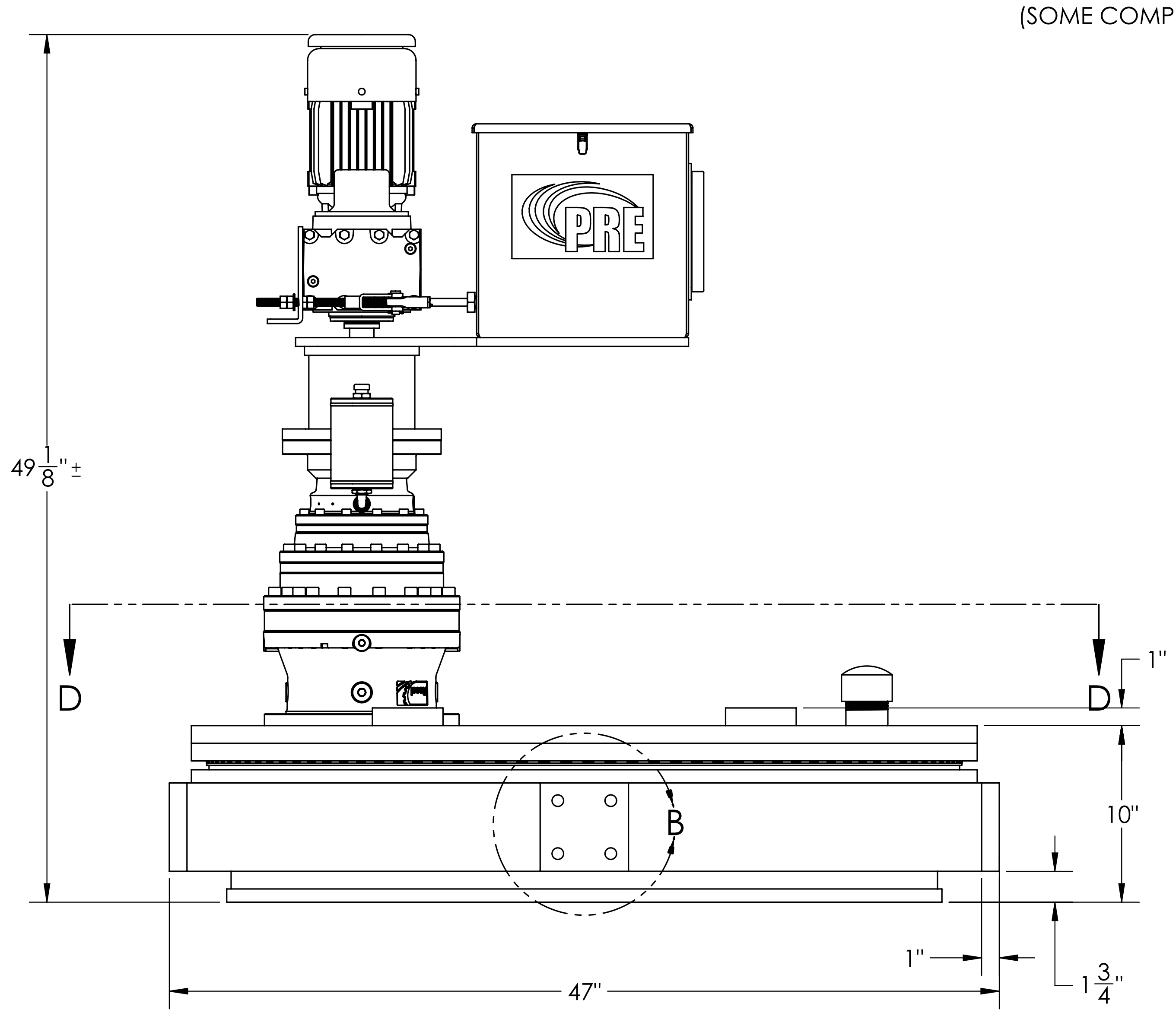

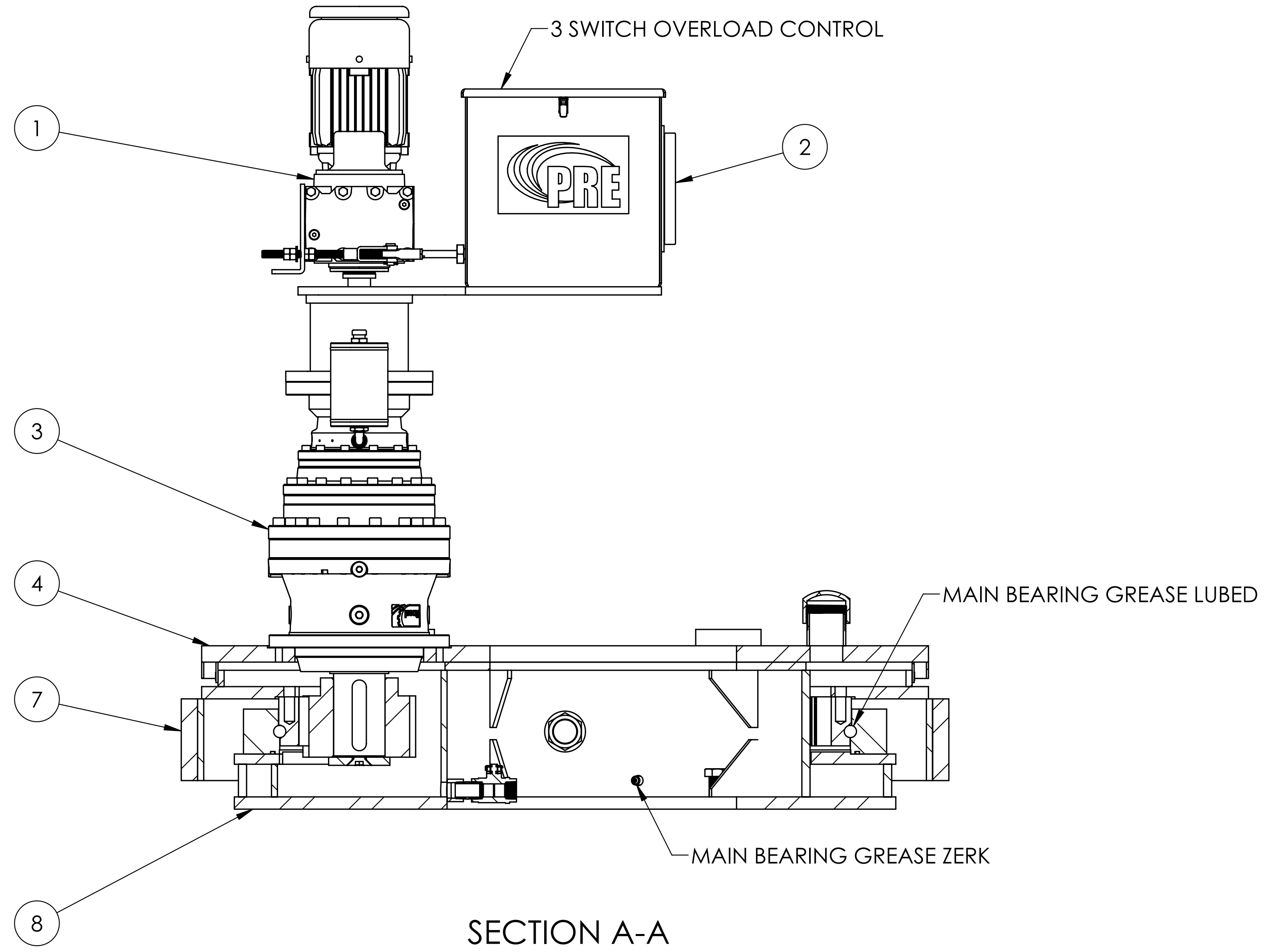

SECTION A-A
SCALE 1 : 8

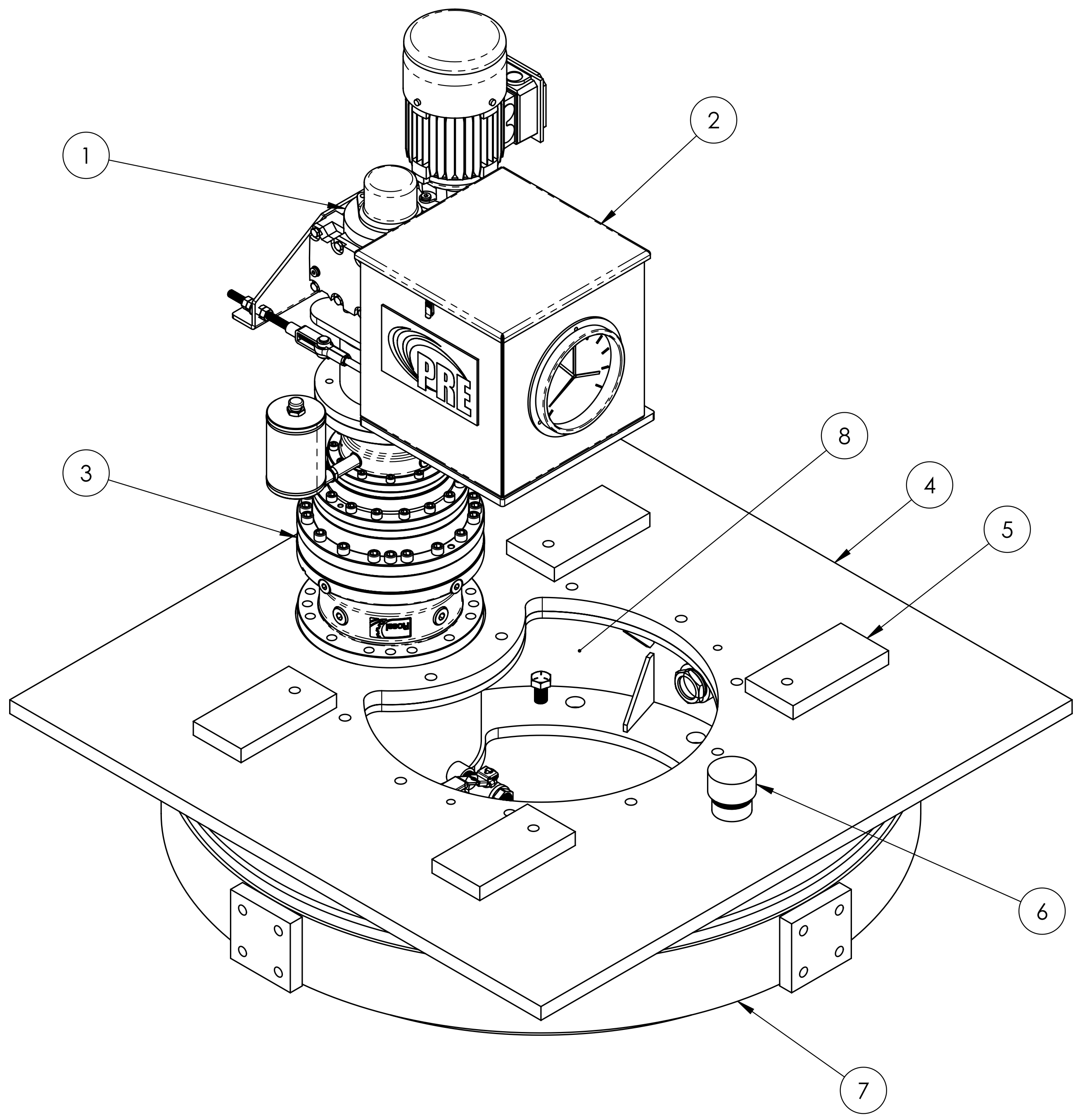

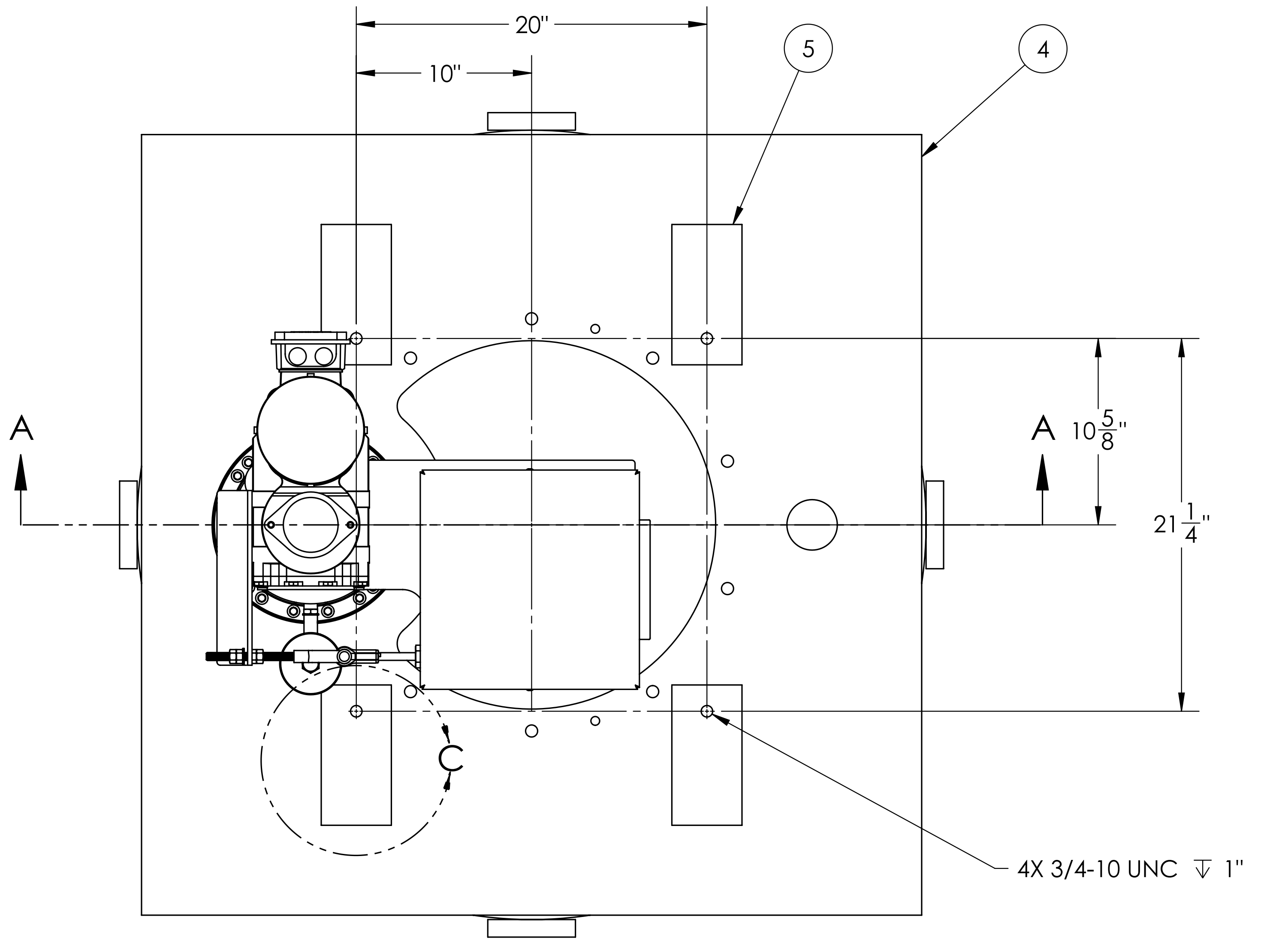

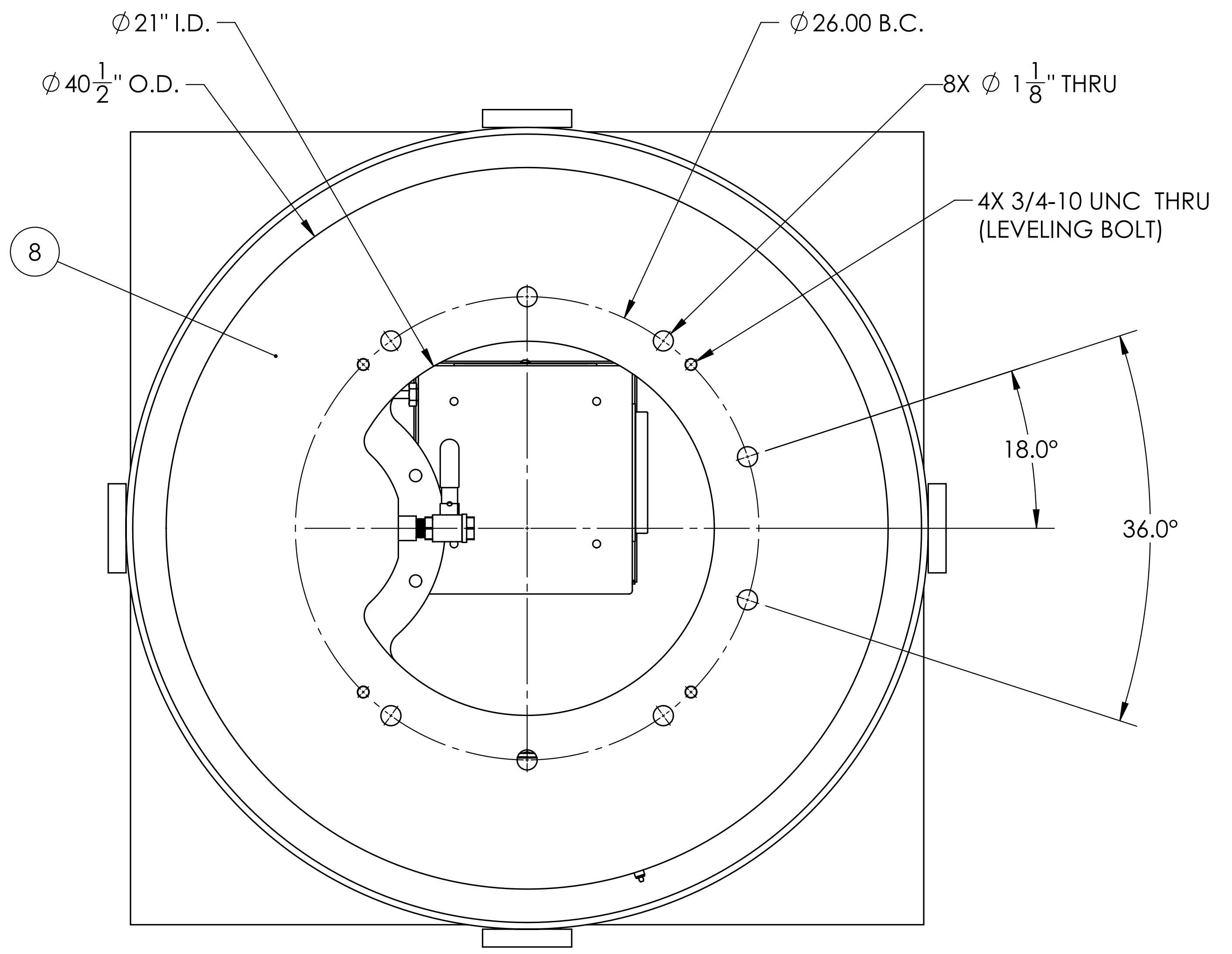

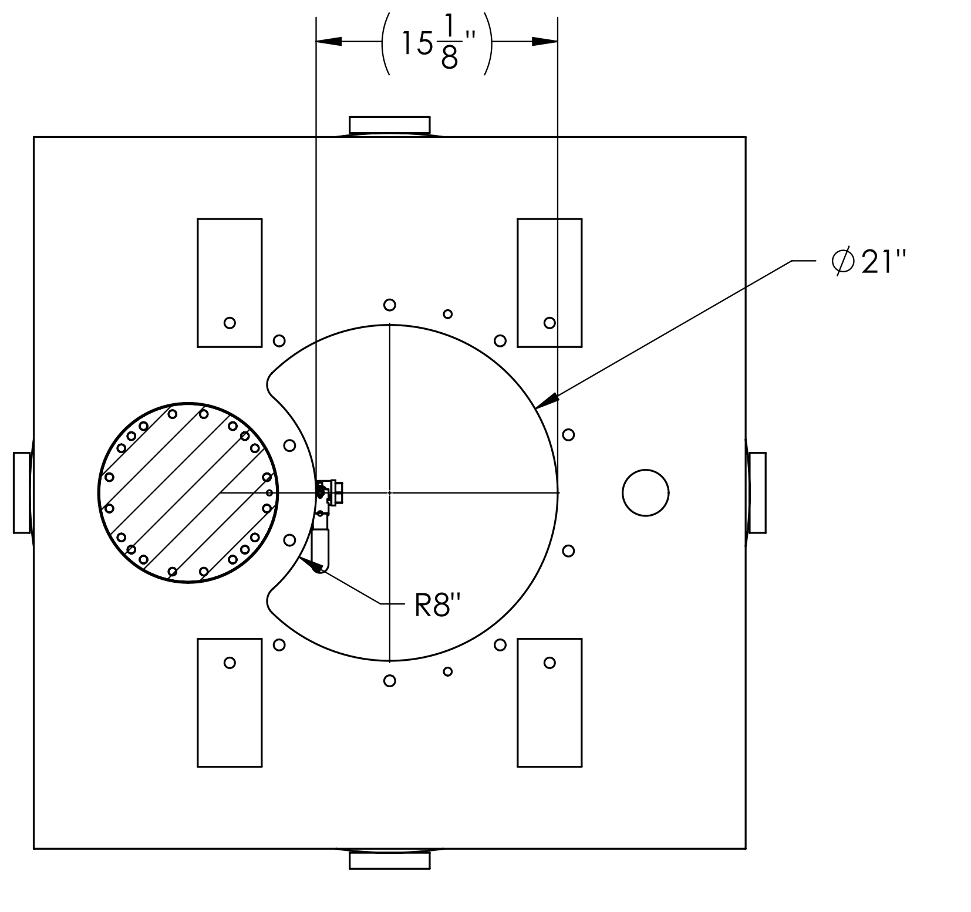

SECTION D-D

0	INITIAL RELEASE	TON	MJD	5/24/2022
REV.	DESCRIPTION	DRAWN	APPROV.	DATE

9090 SOUTH 300 WEST
SANDY, UT 84070
OFFICE: (801) 949-2083

UNLESS OTHERWISE SPECIFIED:
DIMENSIONS ARE IN INCHES
WEIGHTS ARE IN LBS
X. +/- 0.1
X.X +/- 0.06
X.XX +/- 0.015
X.XXX +/- 0.005
ANGLE +/- 0.1 DEGREE
MACHINE FINISH (MAX) 125

MATERIAL: N/A
WEIGHT EACH: 2087.3
QUANTITY / ASSEMBLY: 1
TOTAL WEIGHT: 2087.3

	NAME	DATE
DRAWN	TON	5/22
CHECKED	MJD	5/22
ENG APPR.	MJD	5/22
FAB INSP.		

DO NOT SCALE DRAWING
MODEL NUMBER: C31.009A.1382
DESIGNATION: C31-S

COTTAGE GROVE, OR

TITLE:
C31 CAGE DRIVE G.A.

SIZE D
DWG. / PART NO. 22008-1010
REV 0
SCALE: 1:12
SHEET 1 OF 1

	PART NO.	PART NAME	MATERIAL
	110-STD	DRIVE MOTOR	N/A
	120-STD	PRIMARY REDUCER	N/A
	140	TORQUE BOX	STAINLESS STEEL
	142	TORQUE BOX MOUNTING PLATE	CARBON STEEL
SEE NOTE 2	143	TORQUE ARM	CARBON STEEL
	160-STD	SECONDARY REDUCER	N/A
	C31-170	PINION	8620 STEEL
	171	RETAINING PLATE	CARBON STEEL
	210	COVER PLATE	CARBON STEEL
SEE NOTE 2	C31-211	COVER ADAPTER	CARBON STEEL
	C31-220	CAGE ADAPTER	CARBON STEEL
A	90221	CAGE ADAPTER SEAL	NEOPRENE
A	90222	CAGE ADAPTER SEAL CLAMP	CARBON STEEL
	C31-230	MAIN BEARING	4140 ALLOY STEEL
	C31-240	FABRICATED BASE	CARBON STEEL
A	90241	SIGHT GLASS	CARBON STEEL
A	90242	PIPE NIPPLE	CARBON STEEL
A	90244	DRAIN VALVE	CARBON STEEL
	90211	FILL CAP	CARBON STEEL
	1020-STD	TOP STACK ASSEMBLY	CARBON STEEL

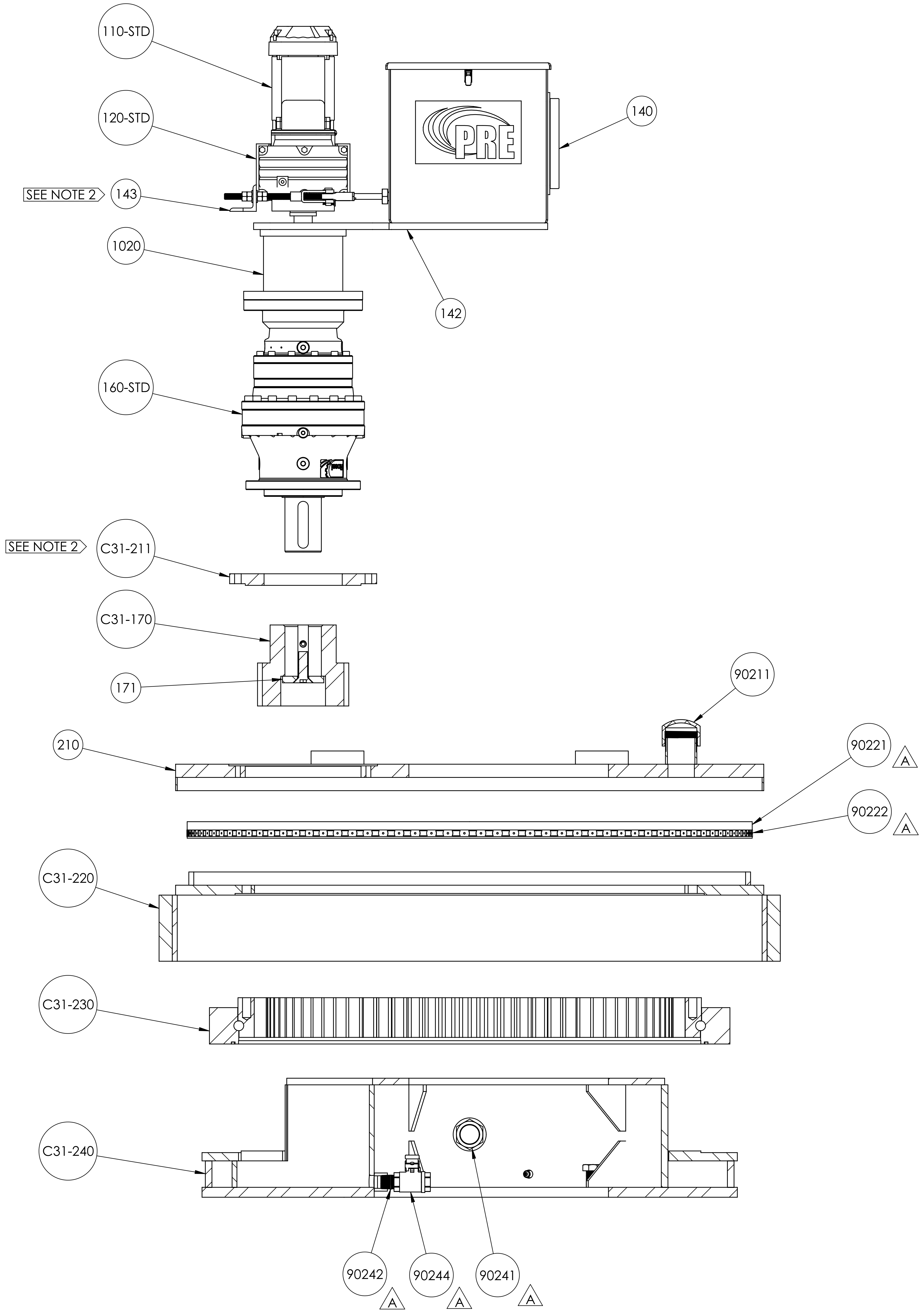

SECTION A-A

NOTES:

1. THIS IS A GENERIC ASSEMBLY AND IS PROVIDED AS A REFERENCE DURING MAINTENANCE OF YOUR UNIT.
2. SOME COMPONENTS MAY DIFFER FROM YOUR SPECIFIC UNIT. PLEASE REFER TO YOUR G.A. FOR AN EXACT CONFIGURATION.

REV.	DESCRIPTION	DRAWN	APPROV.	DATE
A	UPDATED PART NUMBERS	TON	MJD	4/12/2022
0	INITIAL RELEASE	TON	MJD	9/21

9090 SOUTH 300 WEST
SANDY, UT 84070
OFFICE: (801) 949-2083

PROPRIETARY AND CONFIDENTIAL

THE INFORMATION CONTAINED IN THIS DRAWING IS THE SOLE PROPERTY OF PRECISION ROTATING EQUIPMENT. ANY REPRODUCTION IN PART OR AS A WHOLE WITHOUT THE WRITTEN PERMISSION OF PRECISION ROTATING EQUIPMENT IS PROHIBITED.

UNLESS OTHERWISE SPECIFIED:
DIMENSIONS ARE IN INCHES
WEIGHTS ARE IN LBS
X. +/- 0.1
X.X +/- 0.06
X.XX +/- 0.015
X.XXX +/- 0.005
ANGLE +/- 0.1 DEGREE
MACHINE FINISH (MAX) 125

MATERIAL: N/A

WEIGHT EACH: 1927.9

QUANTITY / ASSEMBLY: 1

TOTAL WEIGHT: 1927.9

	NAME	DATE
DRAWN	TON	9/21
CHECKED	MJD	9/21
ENG APPR.	MJD	9/21
FAB INSP.		

DO NOT SCALE DRAWING

MODEL NUMBER: C31-S

DESIGNATION: C31-S

C31-STANDARD

TITLE:

C31 ASSEMBLY

SIZE D

DWG. / PART NO. C31-1011

REV A

SCALE: 1:6

SHEET 1 OF 1

D C31-STANDARD REV A

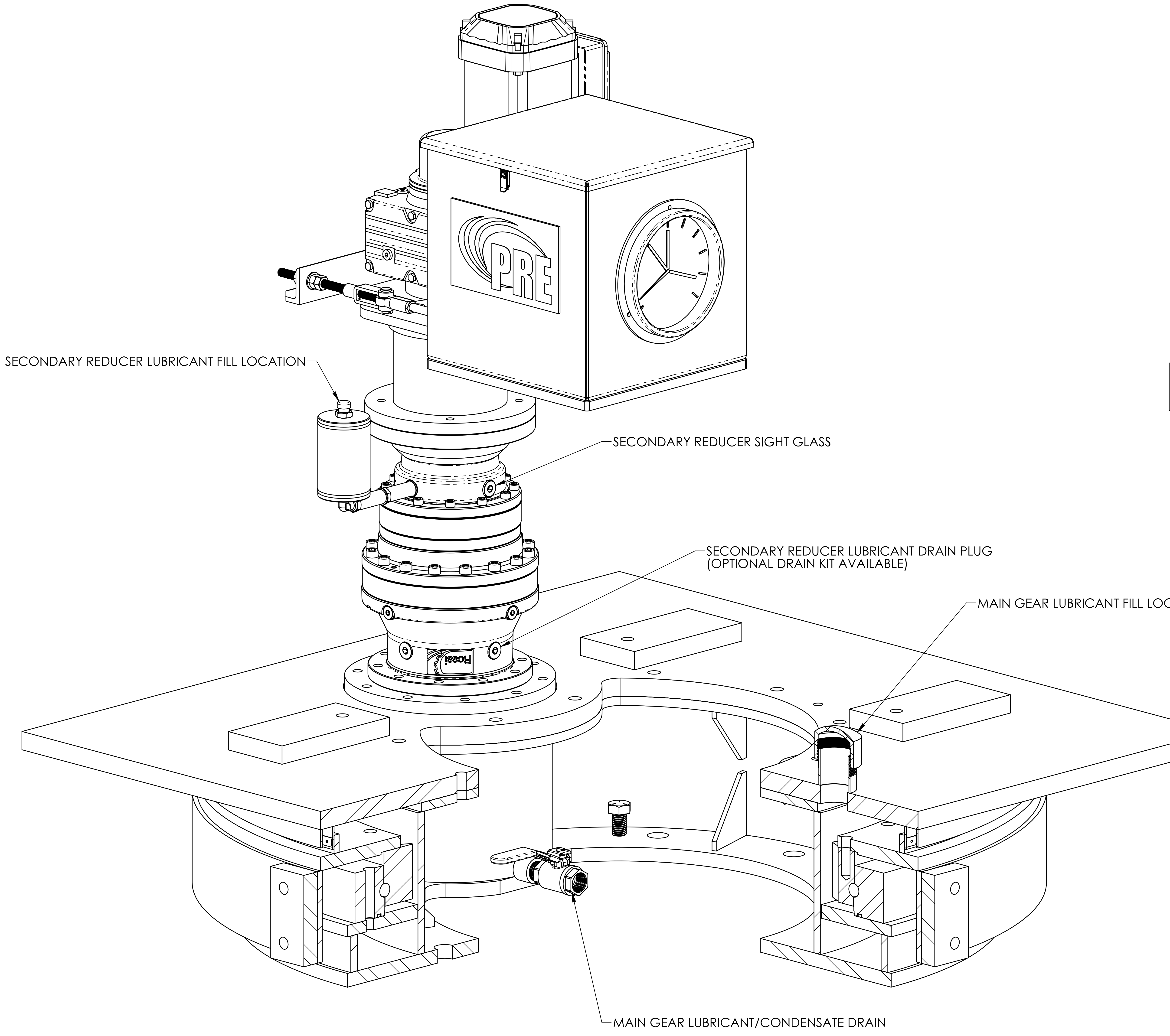

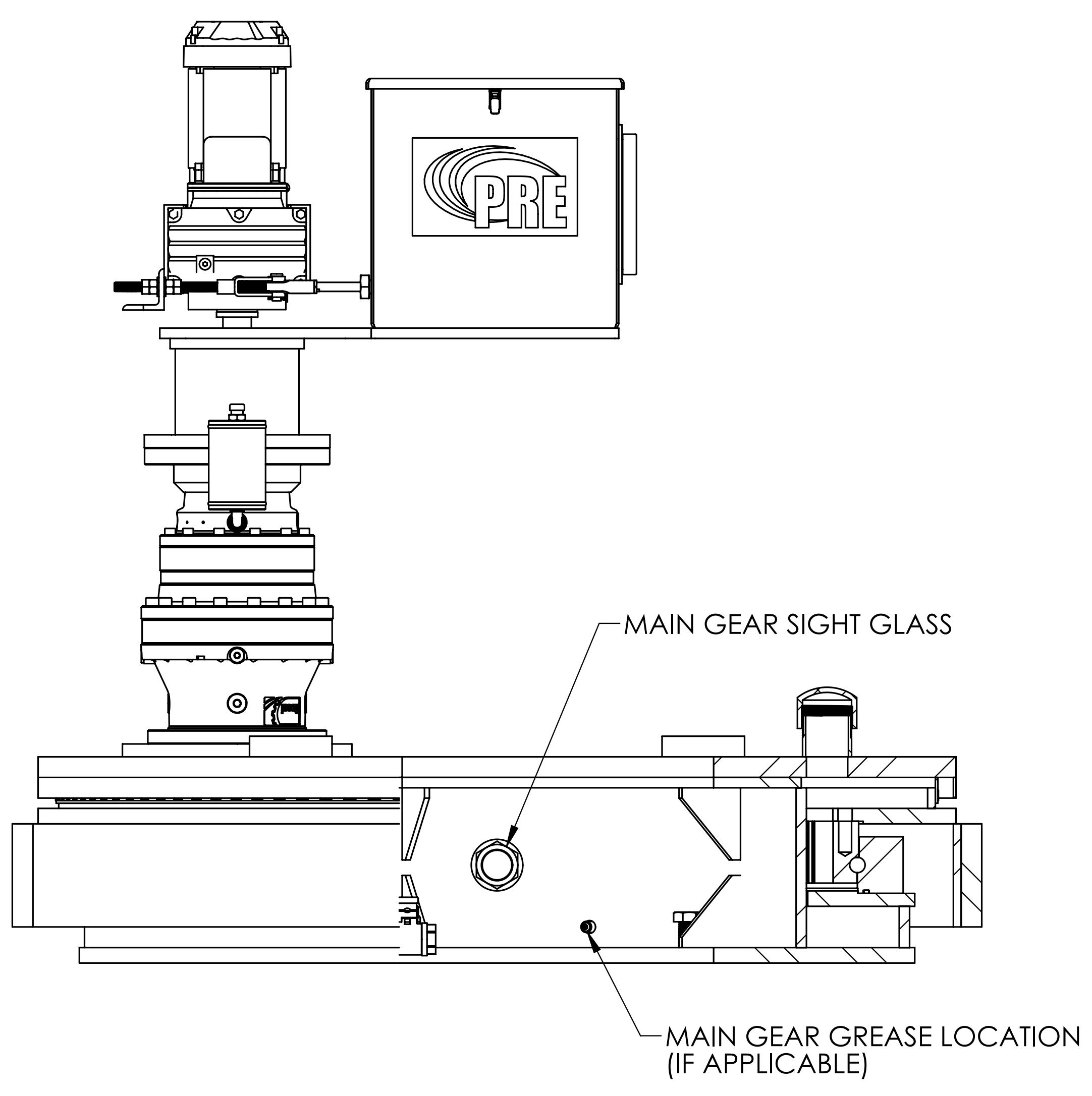

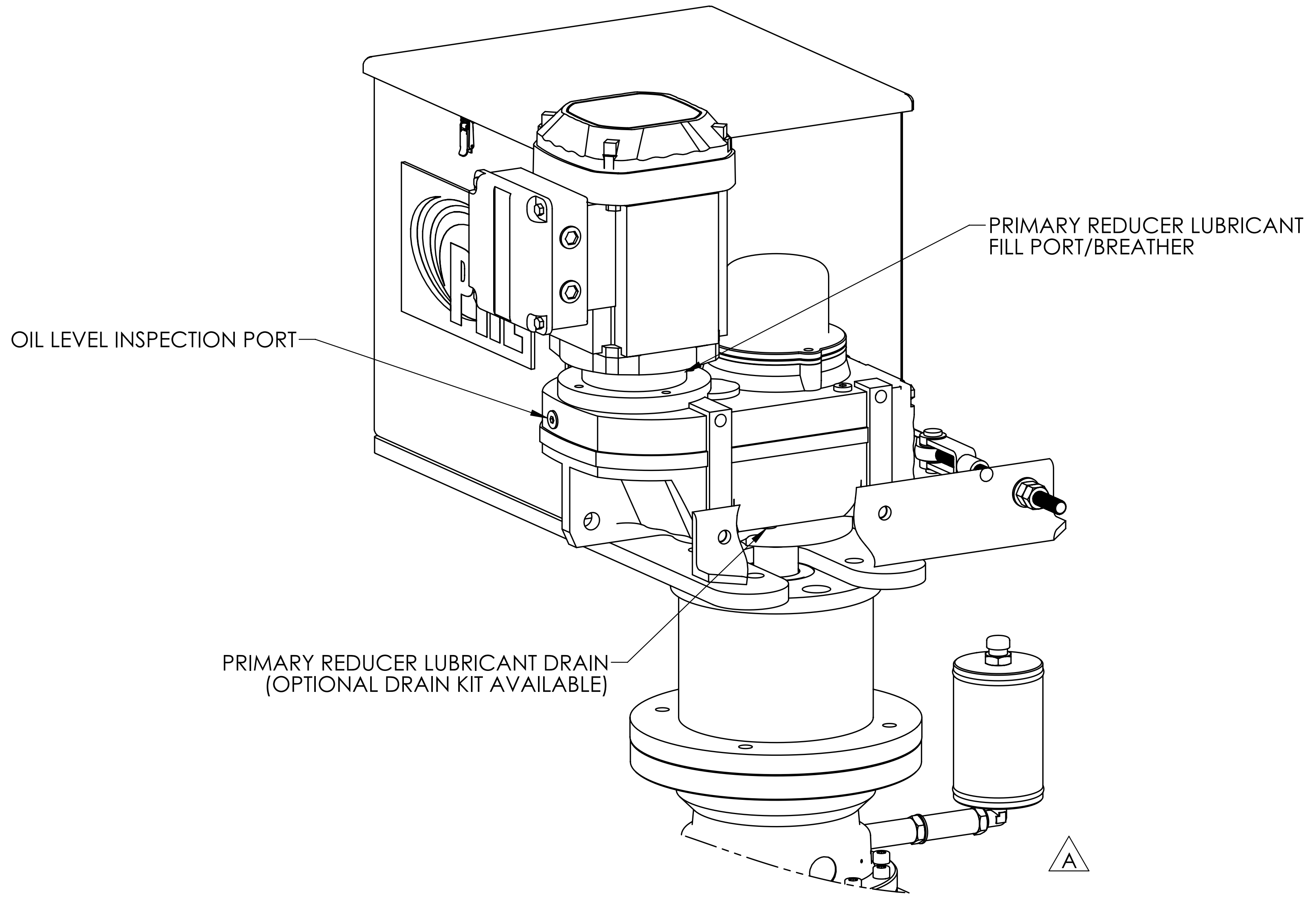

NOTES:

1. REFER TO YOUR LUBRICATION CHART FOR LUBRICATION TYPE AND VOLUME.
2. REFER TO YOUR MAINTENANCE SCHEDULE FOR ADDITIONAL UNIT CARE AND PROCEDURES.
3. DRAIN & SIGHT GLASS ORIENTATION MAY VARY.

REV.	DESCRIPTION	DRAWN	APPROV.	DATE
A	UPDATED PRIMARY REDUCER LUBRICATION VIEW TO MATCH OTHER SERIES	TON	MJD	4/14/2022
0	INITIAL RELEASE	TON	MJD	9/21

PRE
9090 SOUTH 300 WEST
SANDY, UT 84070
OFFICE: (801) 949-2083

PROPRIETARY AND CONFIDENTIAL

THE INFORMATION CONTAINED IN THIS DRAWING IS THE SOLE PROPERTY OF PRECISION ROTATING EQUIPMENT. ANY REPRODUCTION IN PART OR AS A WHOLE WITHOUT THE WRITTEN PERMISSION OF PRECISION ROTATING EQUIPMENT IS PROHIBITED.

UNLESS OTHERWISE SPECIFIED:
DIMENSIONS ARE IN INCHES
WEIGHTS ARE IN LBS
X. +/- 0.1
X.X +/- 0.06
X.XX +/- 0.015
X.XXX +/- 0.005
ANGLE +/- 0.1 DEGREE
MACHINE FINISH (MAX) 125
MATERIAL: N/A
WEIGHT EACH: 1927.9
QUANTITY / ASSEMBLY: 1
TOTAL WEIGHT: 1927.9

	NAME	DATE
DRAWN	TON	9/21
CHECKED	MJD	9/21
ENG APPR.	MJD	9/21
FAB INSP.		

DO NOT SCALE DRAWING
MODEL NUMBER: C31-S
DESIGNATION: C31-S

C31-STANDARD
TITLE: C31 DRIVE LUBRICATION DETAIL
SIZE D
DWG. / PART NO. C31-1012
REV A
SCALE: 1:4
SHEET 1 OF 1

D C31-STANDARD REV A

NOTES:

PROJECT NAME:	COTTAGE GROVE, OR
PROJECT NUMBER:	22008
ENGINEER:	
SPECIFICATION SECTION:	11338
TYPE:	ELECTRIC DRIVEN
EQUIPMENT:	31" CAGE DRIVE UNIT
MODEL NUMBER:	C31.009A.1382
# UNITS:	1

ALLOWABLE STRESS VALUES USED IN THE STRUCTURAL STEEL DESIGN SHALL NOT EXCEED ALLOWABLE STRESSES, AS DEFINED BE CURRENT AISC STANDARDS.

ALL WELDING SHALL BE PERFORMED IN ACCORDANCE WITH THE LATEST EDITION OF A.W.S. WELDING PROCEDURES WITH QUALIFICATION RECORDS PER A.W.S. D1.1.

ALL STRUCTURAL SHAPES AND PLATES TO BE PER ASTM AND SHALL HAVE A MINIMUM THICKNESS OF 3/16" UNLESS OTHERWISE NOTED.

DRIVE TORQUE (FT-LBS):

CONTINUOUS:	15,000
ALARM:	15,000
CUT-OUT 1:	18,750
CUT-OUT 2:	21,000

DRIVE DESIGN CRITERIA:

STANDARDS:	AGMA 2001 - D04 ABMA 9:1990
GEARBOX S.F.:	1.25

SURFACE PREPARATION: SSPC-SP6 (COMMERCIAL BLAST)

SHOP COATING:

PRIMER:
TNEMEC POTA-POX PLUS
SERIES N140F
COLOR: BEIGE COLOR NUMBER 1255
4-6 MILS DFT

TOP COAT:
TNEMEC ENDURA-SHIELD II
SERIES 1074U
COLOR: MOUSE GRAY RAL7048
4-6 MILS DFT

MATERIAL:

FASTENERS:	ZINC PLATED, SAE GRADE 5
BASE:	CARBON STEEL
ALL OTHER PLATE:	CARBON STEEL

PROJECT DRAWING SHEETS:

DRG.	SHEET NO.	DESCRIPTION
1010	1 OF 1	GENERAL ARRANGEMENT
1011	1 OF 1	ASSEMBLY DRAWING
1012	1 OF 1	LUBRICATION DRAWING
1013	1 OF 1	GENERAL NOTES

OPERATION AND MAINTENANCE MANUALS (O&M): (1) ELECTRONIC COPY

SPARE PARTS:

- (3) SHEAR PINS PER DRIVE
- (1) SET BEARINGS AND SEALS FOR PRIMARY REDUCER
- (1) SET BEARINGS AND SEALS FOR SECONDARY REDUCER
- (1) YEAR OF LUBRICANTS

REV.	DESCRIPTION	DRAWN	APPROV.	DATE
0	INITIAL RELEASE	TON	MJD	5/24/2022

PRE
9090 SOUTH 300 WEST
SANDY, UT 84070
OFFICE: (801) 949-2083

UNLESS OTHERWISE SPECIFIED:
DIMENSIONS ARE IN INCHES
WEIGHTS ARE IN LBS
X. +/- 0.1
X.X +/- 0.06
X.XX +/- 0.015
X.XXX +/- 0.005
ANGLE +/- 0.1 DEGREE
MACHINE FINISH (MAX) 125

MATERIAL: N/A
WEIGHT EACH: N/A
QUANTITY / ASSEMBLY: 1
TOTAL WEIGHT: N/A

	NAME	DATE
DRAWN	TON	5/22
CHECKED	MJD	5/22
ENG APPR.	MJD	5/22
FAB INSP.		

DO NOT SCALE DRAWING
MODEL NUMBER: C31.009A.1382
DESIGNATION: C31-S

COTTAGE GROVE, OR
TITLE: GENERAL NOTES
SIZE D
DWG. / PART NO. 22008-1013
REV 0
SCALE: 1:12
SHEET 1 OF 2

D 22008 REV 0

NOTES CONTINUED:

EXCLUSIONS:
DURING DRIVE UNIT INSTALLATION, START-UP, AND OPERATION, PRECISION ROTATING EQUIPMENT (PRE) IS NOT RESPONSIBLE FOR THE SUPPLY OF THE FOLLOWING ITEMS (UNLESS SPECIFICALLY NOTED OTHERWISE IN THE PARTS LIST OR O&M MANUAL): LUBRICANTS, CUTTING FLUIDS, SEALANTS, ADHESIVES, GASKETS, SHIM STOCK, PERISHIBLE WELD SUPPLIES (WELD ROD, WIRE, GAS, ETC.), ASSEMBLY TOOLS (PINS, BARS, STANDARD HAND TOOLS, PERISHIBLE TOOLS (I.E. DRILL BITS, GRIND WHEELS, ETC.), CHAIN FALLS, CRANES, MAN LIFTS, FORKLIFTS, ETC.), INTERIM OR TERMPORARY RIGGING OR BRACING USED DURING EQUIPMENT ERECTION, TEMPORARY OR FINAL POWER TO THE MECHANISMS, LADDERS AND SCAFFOLDING, SURVEYING OR SPECIAL MEASURING INSTRUMENTS, MISCELLANEOUS FASTNERS NOT SPECIFICIALLY CALLED OUT IN THE PROVIDED FASTENER LIST.

PRE ACCEPTS NO FINANCIAL RESPONSIBILITY FOR THE FOLLOWING ACTIVITIES WHICH ARE CONSIDERED PART OF THE NORMAL SCOPE OF WORK PERFORMED BY THE INSTALLATION CONTRACTOR: DRIVE UNIT LEVELING, COMPONENT SHIMMING (ALL FABRICATED STEEL HAS NATURAL VARIABILITY, AND WILL REQUIRE SOME SHIMMING TO PLUMB AND ALIGN), FIT-UP AND STANDARD ADJUSTMENT OF COMPONENTS DURING ASSEMBLY, CONDUIT OR ELECTRICAL WIRING, PIPING.

ADDITIONALLY, PRE WILL NOT ACCEPT ANY CHARGES RELATED TO UNFORSEEN INTERFERENCES OR INTERFACING ISSUES RELATED TO ADJACENT OR MATING EQUIPMENT SUPPLIED BY OTHERS, THAT WAS NOT CLEARLY IDENTIFIED AND DIMENSIONED IN THE APPROVED SUBMITTAL SUPPLIED BY PRE AT THE BEGINNING OF THE PROJECT. IF ITEMS SUCH AS INLET OR OUTLET CONNECTION POINTS, TANK GEOMETRY, ETC. ARE OMMITTED OR INCORRECTLY LOCATED OR IDENTIFIED, BUT APPROVED BY THE CUSTOMER AT THE SUBMITTAL PHASE OF THE PROJECT, PRE ACCEPTS NO RESPONSIBILITY FOR THIS OVERSIGHT, AND WILL NOT ACCEPT ANY CHARGES RELATED TO THE CORRECTION OF THE PROBLEM.

BACKCHARGES:
THE FOLLOWING ARE THE BACKCHARGE / CHANGE ORDER POLICIES OF PRE. UNLESS STATED OTHERWIDE, IN WRITING, BY PRE, ANY DEVIATION FROM THIS POLICY WILL RESULT IN PRE DECLINING ANY AND ALL SUBMITTED BACKCHARGES OR CHANGE ORDER REQUESTS.

1) MISSING / DAMAGED HARDWARE: UPON ARRIVAL OF MATERIAL ON-SITE, ANY HARDWARE DETERMINED TO BE MISSING OR DAMAGED, MUST BE IDENTIFIED, DOCUMENTED, AND WRITTEN NOTIFICATION BE GIVEN TO PRE WITHIN TWO BUSINESS DAYS OF THE TRUCK ARRIVAL. DAMAGED EQUIPMENT MUST BE IDENTIFIED AND PHOTOGRAPHED PRIOR TO OFF-LOADING THE DELIVERY TRUCK. IF NOTIFICATION IS NOT RECEIVED WITHIN THIS TIME-FRAME, PRE WILL NOT ACCEPT RESPONSIBILITY TO REPAIR OR REPLACE THE EQUIPMENT IN QUESTION. ISSUES REGARDING COATING DAMAGE ARE COVERED IN NOTE 3 BELOW.

2) NON-CONFORMING HARDWARE: IF A COMPONENT OR SUB-ASSEMBLY IS FOUND TO BE INCORRECT (DESIGN MISTAKE, FABRICATION ERROR, DAMAGED, ETC.), PRE MUST BE NOTIFIED AS SOON AS POSSIBLE, AND THE ISSUE DISCUSSED WITH THE APPROPRIATE PROJECT MANAGER. FOLLOWING AN INITIAL INVESTIGATION AND DISCUSSION, A PRE BACKCHARGE APPROVAL FORM MUST BE FILLED OUT AND SUBMITTED TO PRE. THE COMPLETED FORM MUST DESCRIBE THE ISSUE, PROPOSED RESOLUTION, AND A NOT-TO-EXCEED AMOUNT FOR THE REWORK, REPAIR, OR REPLACEMENT OF THE ITEM IN QUESTION. ONCE THIS FORM IS COMPLETED, AND THE PRICE IS AGREED TO BY AN AUTHORIZED PRE REPRESENTATIVE, WRITTEN APPROVAL WILL BE GRANTED TO COMPLETE THE WORK. NOTE: IF THIS PROCEEDURE IS NOT FOLLOWED, AND WRITTEN APPROVAL FOR THE CHANGE IS NOT GRANTED, WITH A STATED NOT-TO-EXCEED AMOUNT FOR THE CHARGE, PRE RESERVES THE RIGHT TO DECLINE ALL FINANCIAL RESPONSIBILITY FOR THE BACKCHARGE. ADDITIONALLY, ANY MODIFICATIONS, CHANGES, ALTERATIONS, ETC. TO THE EQUIPMENT WITHOUT THE EXPRESS WRITTEN CONSENT OF PRE WILL VOID THE COMPANY WARRANTY RELATED TO THE SUPPLIED EQUIPMENT.

3) COATINGS: ANY DAMAGE TO THE FACTORY COATINGS APPLIED TO PRE SUPPLIED EQUPMENT MUST BE NOTED AND DOCUMENTED (PHOTOGRAPHS, IDENTIFICATIONS OF LOCATIONS AND EXTENT OF DAMAGE, ETC.) AT THE POINT OF DELIVERY PRIOR TO OFF-LOADING THE SHIPMENT. WRITTEN NOTIFICATION TO PRE MUST BE RECEIVED WITHIN TWO BUSINESS DAYS, WITH SUPPORTING DOCUMENTATION. IF THIS POLICY IS NOT FOLLOWED, PRE WILL NOT ACCEPT FINANCIAL RESPONSIBILITY FOR THE ISSUE. ANY DAMAGE THAT OCCURS TO THE COATING DURING INSTALLATION (NICKS, SCRATCHES, ETC.) IS CONSIDERED NORMAL INSTALLATION HANDLING DAMAGE, AND SHOULD BE TOUCHED UP AFTER ASSEMBLY PER THE COATING MANUFACTURERES PROCEEDURES. PRE WILL NOT ACCEPT ANY BACKCHARGES RELATED TO TOUCH UP DUE TO INCIDENTAL HANDLING ISSUES. IF COATING REPAIR IS REQUIRED FOR ANY EQUIPMENT MODIFICATION AUTHORIZED BY PRE, THE COST OF THIS ACTIVITY MUST BE INCLUDED IN THE BACKCHARGE NOT-TO-EXCEED AUTHORIZATION FORM. OTHER INSTRUCTIONS AND RECOMMENDATIONS REGARDING COATINGS SYSTEMS IS INCLUDED IN THE O&M MANUAL FOR REFERENCE.

4) SITE VISIT BY PRE PERSONNEL: IF A FIELD PROBLEM IS ENCOUNTERED, AND A VISIT BY A PRE REPRESENTATIVE IS REQUIRED, A P.O. TO PRE WITH A NOT-TO-EXCEED AMOUNT FOR THE TRIP MUST BE ISSUED. IF THE FIELD INVESTIGATION REVEALS THAT THE ISSUE IS INDEED PRE'S RESPONSIBILITY, THE P.O. WILL BE CANCELLED, AND PRE WILL ASSUME FINANCIAL RESPONSIBILITY FOR THE COST OF THE SITE VISIT.

SUBMITTAL APPROVAL:
THE CUSTOMER ACCEPTS THE NOTED EXLCUSIONS AND BACKCHARGE POLICY THROUGH WRITTEN APPROVAL OF THIS SUBMITTAL. ADDITIONALLY, THE CONTENTS OF THIS SUBMITTAL (GRAPHICAL OR TEXT) SUPERCEDE ANY OTHER DOCUMENT AT THE POINT OF WRITTEN APPROVAL, AND ARE THE BASIS FROM WHICH THE DRIVE UNIT WILL BE ANALYZED, DESIGNED, FABRICATED, AND SUPPLIED. FOLLOWING SUBMITTAL APPROVAL, ANY SUBSEQUENT REVISIONS TO THE DESIGN MUST BE FORWARDED TO PRE WITH A WRITTEN REQUEST FOR A SUBMITTAL UPDATE (RE-SUBMITTAL) AND WRITTEN CUSTOMER APPROVAL OF THE UPDATE. NOTE: ANY CHANGES FOLLOWING SUBMITTAL APPROVAL BY THE CUSTOMER MAY REQUIRE A COST ADJUSTMENT AND CHANGE ORDER DEPENDING ON THE NATURE OF THE CHANGE, STATUS OF THE MATERIAL ORDER, OR SHOP FABRICATION PROGRESS.

PRE
9090 SOUTH 300 WEST
SANDY, UT 84070
OFFICE: (801) 949-2083

UNLESS OTHERWISE SPECIFIED:
DIMENSIONS ARE IN INCHES
WEIGHTS ARE IN LBS
X. +/- 0.1
X.X +/- 0.06
X.XX +/- 0.015
X.XXX +/- 0.005
ANGLE +/- 0.1 DEGREE
MACHINE FINISH (MAX) 125

MATERIAL: N/A
WEIGHT EACH: N/A
QUANTITY / ASSEMBLY: 1
TOTAL WEIGHT: N/A

	NAME	DATE
DRAWN	TON	5/22
CHECKED	MJD	5/22
ENG APPR.	MJD	5/22
FAB INSP.		

DO NOT SCALE DRAWING
MODEL NUMBER: C31.009A.1382
DESIGNATION: C31-S

COTTAGE GROVE, OR
TITLE: GENERAL NOTES
SIZE D
DWG. / PART NO. 22008-1013
REV 0
SCALE: 1:12
SHEET 2 OF 2

CALCULATIONS

AGMA CALCULATIONS

44700	Date
MJD	Engineer
31" Cage	Drive Size
22008	PRE Project

The contact stress number formula for gear teeth is (Per AGMA 2001-D04):

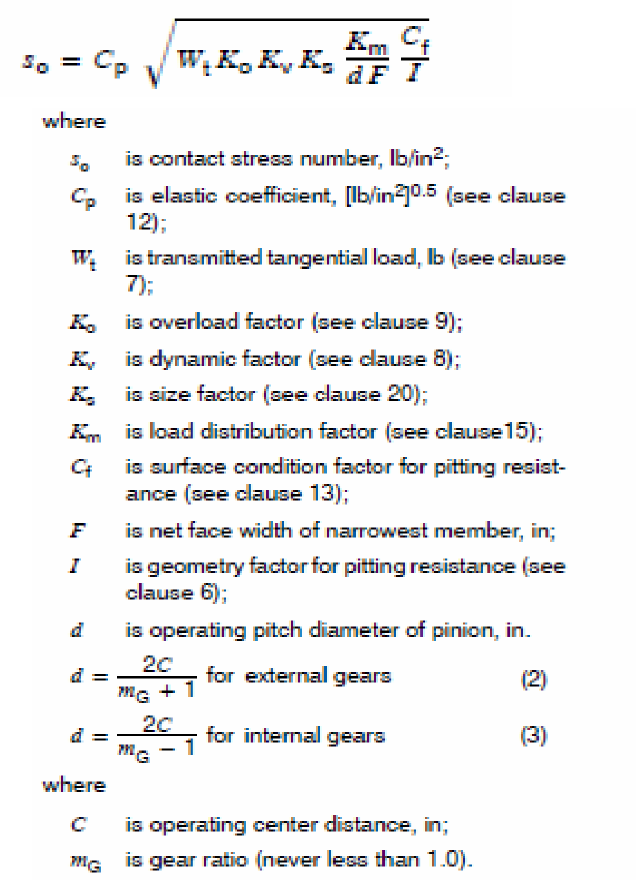

$$s_c = C_p \sqrt{W_t K_o K_v K_s \frac{K_m}{d\,F} \frac{C_f}{I}}$$

where

s_c is contact stress number, lb/in^2;

C_p is elastic coefficient, [lb/in^2]$^{0.5}$ (see clause 12);

W_t is transmitted tangential load, lb (see clause 7);

K_o is overload factor (see clause 9);

K_v is dynamic factor (see clause 8);

K_s is size factor (see clause 20);

K_m is load distribution factor (see clause15);

C_f is surface condition factor for pitting resistance (see clause 13);

F is net face width of narrowest member, in;

I is geometry factor for pitting resistance (see clause 6);

d is operating pitch diameter of pinion, in.

$$d = \frac{2C}{m_G + 1} \text{ for external gears} \qquad (2)$$

$$d = \frac{2C}{m_G - 1} \text{ for internal gears} \qquad (3)$$

where

C is operating center distance, in;

m_G is gear ratio (never less than 1.0).

Sc-Gear	225,000
Sc-Pinion	225,000
Cp	2300
Wt	28,199
Ko	1
Kv	1.2
Ks	1
Km	1.19
Cf	1
F	3
# Teeth Pinion	15
# Teeth Gear	78
Ratio	5.20
I	0.135175
DP	2.5
d	6.00
D	31.2
Sh	1.02
Kt	1
Ch	1
Kr	1.25

	Gear		Pinion	
Wt =	19,035	lb	28,199	lb
Torque =	24,745	ft-lb	36,659	ft-lb
Required T	15,000	ft-lb	15,000	ft-lb
SF =	1.65	OK	2.44	OK

The fundamental formula for bending stress number in a gear tooth is:

$$s_t = W_t K_o K_v K_s \frac{P_d}{F} \frac{K_m K_B}{J}$$

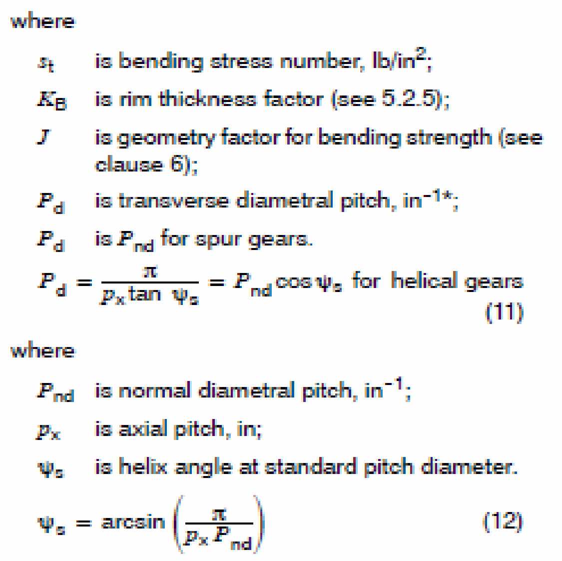

where

- s_t is bending stress number, lb/in^2;
- K_B is rim thickness factor (see 5.2.5);
- J is geometry factor for bending strength (see clause 6);
- P_d is transverse diametral pitch, in^{-1}*;
- P_d is P_{nd} for spur gears.

$$P_d = \frac{\pi}{p_x \tan \psi_s} = P_{nd} \cos \psi_s \text{ for helical gears} \quad (11)$$

where

- P_{nd} is normal diametral pitch, in^{-1};
- p_x is axial pitch, in;
- ψ_s is helix angle at standard pitch diameter.

$$\psi_s = \arcsin\left(\frac{\pi}{p_x P_{nd}}\right) \quad (12)$$

St-Gear	65,000
St-Pinion	65,000
KB	1
J Gear	0.31
J Pinion	0.42
Pd	3
Ko	1
Kv	1
Ks	1
Km	1.19

	Gear		Pinion	
Wt =	25,473	lb	28,411	lb
Torque =	33,115	ft-lb Gear	36,934	ft-lb Pinion
Required T	15,000	ft-lb	15,000	ft-lb
SF	2.21	OK	2.46	OK

ABMA L10
BEARING LIFE
CALCULATIONS

May 19, 2022	Date
MJD	Engineer
31" Cage	Drive Size
22008	PRE Project

ABMA L-10 Life Rating Calculation for the Main Drive Bearing per ANSI/ABMA 9:1990

L10 Life Equation: L10 = (C/P)^3 x 1,000,000 Revolutions (ABMA Equation 5.3)
(Ball Bearings) Where C = Dynamic Load Rating (Supplied by Bearing Manufacturer) (lb)

P = Bearing Equivalent Load (lb)

P = XFr + Yfa (ABMA Equation 5.2)

X =	0.56	Radial Factor
Fr =	(See Below)	Effective Radial Load
Y =	1.4	Axial Factor
Fa =	(See Below)	Effective Axial Load (Mechanism Weight)

Load Data:

Design Torque Output:	15,000	ft-lb
Bearing Ball Race Diameter:	35	inches
Gear Pitch Diameter:	31.2	inches
Required Life:	175,000	hours
Wt - Tangential Load:	11,538	lb
Fr - Radial Load:	12,279	lb
Fa - Axial (Thrust) Load:	15,000	lb

Calculation of Main Bearing Life:

C = Dynamic Load Rating (lb):	53,457	lb
P = Bearing Equivalent Load (lb):	27,876	lb

L10 Life: 3,677,403 Revolutions

Bearing Speed: 0.044 RPM

L10 Life in Hours: 1,392,956

L10 Life in Years: 159 SF = 8.0 OK

COATINGS

TNEMEC

PRIMER:
COLOR BEIGE
NUMBER 1255

PRODUCT DATA SHEET

POTA-POX® PLUS SERIES N140F

PRODUCT PROFILE

GENERIC DESCRIPTION Polyamidoamine Epoxy

COMMON USAGE Innovative potable water coating which offers high-build edge protection and allows for application at a wide range of temperatures (down to 35°F or 2°C). For use on the interior and exterior of steel or concrete tanks, reservoirs, pipes, valves, pumps and equipment in potable water service.

COLORS 1211 Red, 1255 Beige, 00WH Tnemec White, 15BL Tank White, 39BL Delft Blue, 35GR Black. **Note:** Epoxies chalk with extended exposure to sunlight. Lack of ventilation, incomplete mixing, miscatalyzation or the use of heaters that emit carbon dioxide and carbon monoxide during application and initial stages of curing may cause yellowing to occur.

SPECIAL QUALIFICATIONS Certified by **NSF International** in accordance with **NSF/ANSI Std. 61.** Ambient air cured Series N140F is qualified for use on tanks and reservoirs of 1,000 gallons (3,785 L) capacity or greater, pipes 18 inches (46 cm) in diameter or greater and valves four (4) inches (10 cm) in diameter or greater. Series N140F is certified by **NSF International** in accordance with **NSF/ANSI Std. 50** for pools and other recreational water facilities. Conforms to **AWWA D 102 Inside Systems No. 1 and No. 2.** Contact your Tnemec representative for systems and additional information. A two-coat system at 4.0-6.0 dry mils (100-150 dry microns) per coat passes the performance requirements of MIL-PRF-4556F for fuel storage. Reference the "Search Listings" section of the NSF website at www.nsf.org for details on the maximum allowable DFT.

PERFORMANCE CRITERIA Extensive test data available. Contact your Tnemec representative for specific test results.

COATING SYSTEM

SURFACER/FILLER/PATCHER 215, 217, 218

PRIMERS Self-priming, 22, 91-H_2O, 94-H_2O, L140, L140F, N140, V140, 141

TOPCOATS **Interior:** Series 22, FC22, L140, L140F, N140, N140F, V140, V140F, 141, 406
Exterior: Series 27, 66, L69, L69F, N69, N69F, V69, V69F, 72, 73, L140, L140F, N140, N140F, V140, V140F, 156, 157, 161, 175, 180, 181, 446, 740, 750, 1028, 1029, 1074, 1074U, 1075, 1075U, 1077, 1078, 1080, 1081. Refer to COLORS on applicable topcoat data sheets for additional information. **Note:** The following recoat times apply for Series N140F: Immersion Service—Surface must be scarified by blasting with fine abrasive after 30 days. Atmospheric Service—After 30 days, scarification or an epoxy tie-coat is required. When topcoating with Series 740 or 750, recoat time for N140F is 14 days. Contact your Tnemec representative for specific recommendations.

SURFACE PREPARATION

PRIMED STEEL **Immersion Service:** Scarify the epoxy prime coat surface by abrasive blasting with fine abrasive before topcoating if it has been exterior exposed for 30 days or longer and N140F is the specified topcoat.

STEEL **Immersion Service:** SSPC-SP10/NACE 2 Near-White Blast Cleaning with a minimum angular anchor profile of 1.5 mils
Non-Immersion Service: SSPC-SP6/NACE 3 Commercial Blast Cleaning with a minimum angular anchor profile of 1.5 mils.

CAST/DUCTILE IRON Contact your Tnemec Representative or Tnemec Technical Services.

CONCRETE Allow new concrete to cure 28 days. For optimum results and/or immersion service, abrasive blast referencing SSPC-SP13/NACE 6, ICRI-CSP 2-4 Surface Preparation of Concrete and Tnemec's Surface Preparation and Application Guide. Fill all holes, pits, voids and cracks with 215 or 218.

ALL SURFACES Must be clean, dry and free of oil, grease and other contaminants.

TECHNICAL DATA

VOLUME SOLIDS 68.0 ± 2.0% (mixed) †

RECOMMENDED DFT 2.0 to 10.0 mils (50 to 225 microns) per coat. **Note:** MIL-PRF-4556F applications require two coats at 4.0-6.0 mils (100-150 microns) per coat. Otherwise, the number of coats and thickness requirements will vary with substrate, application method and exposure. Contact your Tnemec representative.

CURING TIME AT 5 MILS DFT

Temperature	To Handle	To Recoat	Immersion
75°F (24°C)	4 hours	5 hours	7 days
65°F (18°C)	7-8 hours	9-11 hours	8 days
55°F (13°C)	12-14 hours	16-20 hours	9-10 days
45°F (7°C)	18-22 hours	28-32 hours	12-13 days
35°F (2°C)	28-32 hours	46-50 hours	16-18 days

Curing time varies with surface temperature, air movement, humidity and film thickness.
Note: For valve applications allow 14 days cure at 75°F (24°C) prior to immersion. For pipe applications allow 30 days cure at 75°F (24°C) prior to immersion. **Ventilation:** When used in enclosed areas, provide adequate ventilation during application and cure. **Note:** Refer to product listings on www.nsf.org for specific potable water return to service information.

VOLATILE ORGANIC COMPOUNDS **Unthinned:** 2.3 lbs/gallon (273 grams/litre)
Thinned 5% (#60): 2.5 lbs/gallon (299 grams/litre)
Thinned 10% (#4): 2.7 lbs/gallon (323 grams/litre) †

HAPS **Unthinned:** 2.3 lbs/gal solids
Thinned 5% (#60): 2.3 lbs/gal solids
Thinned 10% (#4): 3.1 lbs/gal solids

THEORETICAL COVERAGE 1,094 mil sq ft/gal (26.8 m^2/L at 25 microns). See APPLICATION for coverage rates. †

NUMBER OF COMPONENTS Two: Part A (amine) and Part B (epoxy) — One (Part A) to one (Part B) by volume.

PACKAGING 5 gallon (18.9L) pails and 1 gallon (3.79L) cans — Order in multiples of 2.

NET WEIGHT PER GALLON 12.68 ± 0.25 lbs (5.75 ± .11 kg) (mixed) †

STORAGE TEMPERATURE Minimum 20°F (-7°C) Maximum 110°F (43°C)
For optimum application properties, material temperature should be above 60°F (16°C) prior to application.

TEMPERATURE RESISTANCE (Dry) Continuous 250°F (121°C) Intermittent 275°F (135°C)

SHELF LIFE Part A: 24 months; Part B: 12 months at recommended storage temperature.

FLASH POINT - SETA Part A: 82°F (28°C) Part B: 80°F (27°C)

HEALTH & SAFETY Paint products contain chemical ingredients which are considered hazardous. Read container label warning and Material Safety Data Sheet for important health and safety information prior to the use of this product.
Keep out of the reach of children.

APPLICATION

COVERAGE RATES

	Dry Mils (Microns)	Wet Mils (Microns)	Sq Ft/Gal (m^2/Gal)
Suggested	6.0 (150)	9.0 (230)	182 (16.9)
Minimum	2.0 (50)	3.0 (75)	545 (50.7)
Maximum	10.0 (225)	15.0 (375)	109 (10.1)

Note: Roller or brush application requires two or more coats to obtain recommended film thickness. Allow for overspray and surface irregularities. Wet film thickness is rounded to the nearest 0.5 mil or 5 microns. Application of coating below minimum or above maximum recommended dry film thicknesses may adversely affect coating performance. Reference the “Search Listings” section of the NSF website at www.nsf.org for details on the maximum allowable DFT. †

MIXING

1. Start with equal amounts of both Parts A & B.
2. Using a power mixer, separately stir Parts A & B.
3. Add Part A to Part B under agitation, stir until thoroughly mixed.
4. Both components should be above 50°F (10°C) prior to mixing. For application to surfaces between 35°F to 50°F (2°C to 10°C), allow mixed material to stand thirty (30) minutes and restir before using. For optimum application properties, blended components should be above 40°F (4°C).

THINNING N140F: Use No. 4 or No. 60 Thinner. For air spray, thin up to 10% or 3/4 pint (380 mL) per gallon with No. 4 Thinner or thin up to 5% or 1/4 pint (190 mL) per gallon with No. 60 Thinner. For airless spray, roller or brush, thin up to 5% or 1/4 pint (190 mL) per gallon. **Caution: Series N140F NSF certification is based on thinning with No. 4 or No. 60 Thinner for tanks and only No. 60 Thinner for pipe and valves.** Use of any other thinner voids NSF/ANSI Std. 61 certification. V140F: Use No. 4 Thinner. **Caution: Series V140F NSF certification is based on thinning with No. 4 Thinner only.** Use of any other thinner voids NSF/ANSI Std. 61 certification. **Note:** When using Series V140F, a maximum of 4.5% of No. 4 Thinner may be used to comply with VOC regulations.

POT LIFE 2 hours at 50°F (10°C) 1 hour at 75°F (24°C) 30 minutes at 100°F (38°C)

SPRAY LIFE 30 minutes at 75°F (24°C)
Note: Spray application after listed times will adversely affect ability to achieve recommended dry film thickness.

APPLICATION EQUIPMENT

Air Spray

Gun	Fluid Tip	Air Cap	Air Hose ID	Mat’l Hose ID	Atomizing Pressure	Pot Pressure
DeVilbiss JGA	E	765 or 704	5/16” or 3/8” (7.9 or 9.5 mm)	3/8” or 1/2” (9.5 or 12.7 mm)	75-100 psi (5.2-6.9 bar)	10-20 psi (0.7-1.4 bar)

Low temperatures or longer hoses require higher pot pressure.

Airless Spray

Tip Orifice	Atomizing Pressure	Mat’l Hose ID	Manifold Filter
0.015”-0.019” (380-485 microns)	3000-4800 psi (207-330 bar)	1/4” or 3/8” (6.4 or 9.5 mm)	60 mesh (250 microns)

Use appropriate tip/atomizing pressure for equipment, applicator technique and weather conditions.
Roller: Use 3/8” or 1/2” (9.5 mm to 12.7 mm) synthetic woven nap roller cover. Use longer nap to obtain penetration on rough or porous surfaces.
Brush: Recommended for small areas only. Use high quality natural or synthetic bristle brushes.

SURFACE TEMPERATURE Minimum 35°F (2°C) Maximum 135°F (57°C)
The surface should be dry and at least 5°F (3°C) above the dew point. Coating won’t cure below minimum surface temperature.

CLEANUP Flush and clean all equipment immediately after use with the recommended thinner or MEK.

† Values may vary with color.

TNEMEC

TOP COAT:
COLOR
RAL 7048
MOUSE
GRAY

PRODUCT DATA SHEET

ENDURA-SHIELD® II SERIES 1074U

PRODUCT PROFILE

GENERIC DESCRIPTION Aliphatic Acrylic Polyurethane

COMMON USAGE A coating highly resistant to abrasion, wet conditions, corrosive fumes and exterior weathering. High build quality combines with project specific primers for two-coat, labor saving systems. Contains a blend of ultra-violet light (UV) absorbers for enhanced color and gloss retention. Fast curing options are available; see Curing Time below. NOT FOR IMMERSION SERVICE.

COLORS Refer to Tnemec Color Guide. **Note:** Certain colors may require multiple coats depending on method of application and finish coat color. When feasible, the preceding coat should be in the same color family, but noticeably different.

FINISH Gloss

SPECIAL QUALIFICATIONS Series 1074U meets the requirements of SSPC-36 (level 3) Paint Standard.

PERFORMANCE CRITERIA Contact your Tnemec representative for specific test results.

COATING SYSTEM

PRIMERS **Steel:** Series 1, 20, FC20, 27, 66, L69, L69F, N69, N69F, V69, V69F, 90-97, 91-H_2O, 94-H_2O, 104, 135, L140, L140F, N140, N140F, V140, V140F, 161, 394, 530
Galvanized Steel and Non-Ferrous Metal: Series 27, 66, L69, L69F, N69, N69F, V69, V69F, 135, 161
Concrete: Series 66, L69, L69F, N69, N69F, V69, V69F, 84, 104, 161
CMU: 54-660, 130. Intermediate coat required.
Note: Before topcoating with Series 1074U, Series 530 exterior exposed for more than 24 hours must first be scarified or receive an intermediate coat of Tnemec polyamide epoxy. Recoat windows for other primers may apply. See those data sheets for additional information.

SURFACE PREPARATION

ALL SURFACES Must be clean, dry and free of oil, grease and other contaminants. See primer product data sheet for surface preparation recommendation.

TECHNICAL DATA

VOLUME SOLIDS 66 ± 2.0% (mixed) †

RECOMMENDED DFT 2.0 to 5.0 mils (50 to 125 microns) per coat. **Note:** Number of coats and thickness requirements will vary with substrate, application method and exposure. Contact your Tnemec representative.

CURING TIME

Temperature	To Handle	To Recoat	Resist Moisture
95°F (35°C)	4 hours	5 hours	3 hours
75°F (24°C)	6 hours	8 hours	5 hours
55°F (13°C)	12 hours	16 hours	9 hours
35°F (2°C)	36 hours	48 hours	20 hours

Curing time varies with surface temperature, air movement, humidity and film thickness. If coating is exposed to moisture before the applicable cure parameters are met, dull, flat or spotty appearing areas may develop. **Note:** For faster curing and low-temperature applications, add No. 44-710 Urethane Accelerator; see separate product data sheet. Contact Tnemec Technical Services for force curing times and temperatures.

VOLATILE ORGANIC COMPOUNDS EPA Method 24 †

Unthinned	Max 7% (No. 39 Thin.)	Max 6% (No. 42 Thin.)	Max 5% (No. 48 Thin.)
2.59 lbs/gal (310 g/l)	2.83 lbs/gal (339 g/l)	2.82 lbs/gal (338 g/l)	2.81 lbs/gal (337 g/l)

HAPS

Unthinned	Max 7% (No. 39 Thin.)	Max 6% (No.42 Thin.)	Max 5% (No. 48 Thin.)
0.19 lbs/gal solids	0.19 lbs/gal solids	0.19 lbs/gal solids	0.19 lbs/gal solids

THEORETICAL COVERAGE 1,051 mil sq ft/gal (25.8 m^2/L at 25 microns). See APPLICATION for coverage rates. †

NUMBER OF COMPONENTS Two: Part A and Part B

MIXING RATIO By volume: Eight (Part A) to one (Part B)

PACKAGING

	PART A (Partially filled)	PART B (Partially filled)	When Mixed
3 Gallon Kit	5 gallon pail	1/2 gallon can	3 gallons (11.35L)
1 Gallon Kit	1 gallon pail	1 pint can	1 gallon (3.79L)

NET WEIGHT PER GALLON 11.03 ± 0.25 lbs (5.00 ± .11 kg) (mixed) †

STORAGE TEMPERATURE Minimum 20°F (-7°C) Maximum 110°F (43°C)

TEMPERATURE RESISTANCE (Dry) Continuous 250°F (121°C) Intermittent 275°F (135°C)

SHELF LIFE Part A: 24 months; Part B: 12 months at recommended storage temperature.

FLASH POINT - SETA Part A: 95°F (35°C) Part B: 135°F (57°C)

HEALTH & SAFETY Paint products contain chemical ingredients which are considered hazardous. Read container label warning and Material Safety Data Sheet for important health and safety information prior to the use of this product.
Keep out of the reach of children.

APPLICATION

COVERAGE RATES

Conventional Build (Spray, Brush or Roller)

	Dry Mils (Microns)	Wet Mils (Microns)	Sq Ft/Gal (m^2/Gal)
Suggested	2.5 (65)	4.0 (100)	423 (39.3)
Minimum	2.0 (50)	3.0 (75)	529 (49.2)
Maximum	3.0 (75)	4.5 (115)	353 (32.8)

High-Build (Spray Only)

	Dry Mils (Microns)	Wet Mils (Microns)	Sq Ft/Gal (m^2/Gal)
Suggested	4.0 (100)	6.0 (150)	265 (24.6)
Minimum	3.0 (75)	4.5 (115)	353 (32.8)
Maximum	5.0 (125)	7.5 (190)	212 (19.7)

Note: Can be spray applied at 3.0 to 5.0 mils (75 to 125 microns) DFT per coat when extra protection or the elimination of a coat is desired. Allow for overspray and surface irregularities. Wet film thickness is rounded to the nearest 0.5 mil or 5 microns. Application of coating below minimum or above maximum recommended dry film thicknesses may adversely affect coating performance. †

MIXING Stir contents of the container marked Part A, making sure no pigment remains on the bottom. Add the contents of the can marked Part B to Part A while under agitation. Continue agitation until the two components are thoroughly mixed. When used with 44-710 Urethane Accelerator, first blend 44-710 into Part A under agitation; continue as above. Do not use mixed material beyond pot life limits. **Caution: Part B is moisture-sensitive and will react with atmospheric moisture. Unused material must be kept tightly closed at all times.**

THINNING Thinning is required for proper application. For air or airless spray, thin 6% or 7 ounces per gallon with No. 42 Thinner if temperatures are below 80°F (27°C) or use 5% or 6 ounces of No. 48 Thinner for temperatures above 80°F (27°C). For brush and roller, thin 7% or 9 ounces per gallon with No. 39 Thinner. When using 1074U, maximum thinning is 7% for No. 39 Thinner, 6% for No. 42 Thinner, and 5% for No. 48 Thinner. **Caution: Do not add thinner if more than 30 minutes have elapsed after mixing.**

POT LIFE 1 1/2 hours at 77°F (25°C) unthinned 2 hours at 77°F (25°C) thinned

APPLICATION EQUIPMENT

Air Spray

Gun	Fluid Tip	Air Cap	Air Hose ID	Mat'l Hose ID	Atomizing Pressure	Pot Pressure
DeVilbiss JGA	E	704 or 765	5/16" or 3/8" (7.9 or 9.5 mm)	3/8" or 1/2" (9.5 or 12.7 mm)	75-90 psi (5.2-6.2 bar)	10-20 psi (0.7-1.4 bar)

Low temperatures or longer hoses require higher pot pressure.

Airless Spray

Tip Orifice	Atomizing Pressure	Mat'l Hose ID	Manifold Filter
0.009-0.013" (230-330 microns)	3000-3500 psi (207-241 bar)	1/4" or 3/8" (6.4 or 9.5 mm)	100 mesh (150 microns)

Use appropriate tip/atomizing pressure for equipment, applicator technique and weather conditions.
Roller: Use 1/4" or 3/8" (6.4 mm or 9.5 mm) synthetic woven nap roller covers. Do not use long nap roller covers. Two coats are required to obtain dry film thickness above 3.0 mils (75 microns).
Brush: Recommended for small areas only. Use high quality natural or synthetic bristle brushes. Two coats are required to obtain recommended film thickness above 3.0 mils (75 microns).

SURFACE TEMPERATURE Minimum 35°F (2°C) Maximum 120°F (49°C)
The surface should be dry and at least 5°F (3°C) above the dew point.

CLEANUP Flush and clean all equipment immediately after use with the recommended thinner or MEK.

† Values may vary with color.

COMPONENTS

ELECTRIC MOTOR

Global Standards

Standards

All motors are in accordance with existing standards and regulations:

NEMA MG 1 - Motors and Generators:

- Electrical performance
- Motors for operation on variable AC vector drive

UL 1004 – Electric Motors

CSA C22.2 No. 100-04 - Motors and Generators:

Industrial Products IEC 60034 - parts 1, 5, 6, 8, 9, 11, 12 and 14.

- Part 1 – General rules
- Part 5 – Types of enclosures
- Part 6 – Types of cooling
- Part 8 – Terminal lead designations and sense of rotation
- Part 9 – Noise limits
- Part 11 – Integrated thermal protection
- Part 12 – Starting Performance
- Part 14 – Mechanical vibration

Inverter/Vector Duty

NORD single–speed motors are Inverter/Vector Duty. The construction of the NORD motors insulating system takes into account the non-sinusoidal wave forms produced by variable frequency drives. NORD uses high grade insulating components and extra first turn protection as well as double coated wire to ensure long service life when connected to AC vector drives. NORD motors can produce full torque at zero speed if properly sized, selected and controlled.

INVERTER DUTY MOTOR

IEC 60038 – Standard voltages

CE	NORD motors carry the CE mark in accordance with the Low Voltage Directive and, if installed properly, the Electromagnetic Compatibility Directive (EMC). The CE mark is required for installation in European Union (EU) states.
®	Many NORD motors from frame size 63 to 315 are an Underwriters Laboratories Recognized component per UL standard 1004. ■ File number E191510
C ® US	The Canadian Standards Association CUS mark indicates that CSA has tested and approved NORD motors according to both US and Canadian standards. It is equivalent to the Underwriters Laboratories RU recognition mark (UL standard 1004) and the CSA mark according to CSA Standard C22.2 No. 100-04 ■ File number LR112560
ee	NORD Energy Efficient motors up to frame 180 have been evaluated by the United States Department of Energy and recieved a Certificate of Compliance to certify the efficiency ratings. The certificate of compliance is CC 092B.
pe	NORD Premium Efficient motors up to frame 180 have been evaluated by the United States Department of Energy and recieved a Certificate of Compliance to certify the efficiency ratings. The certificate of compliance is CC 092B.
® energy verified	NORD energy efficient motors carry the CSA energy efficiency verification mark. This mark ensures that CSA has verified that NORD motors are designed and manufactured to meet energy efficiency requirements number EEV112560.
CCC	China Compulsory Certification Nr.: 200 701 040 125 842 9
	GOST® certificate for the import of motors into Russia.

Standard Design & Construction

Standard Motor Construction

Our motors are an important part of our ability to provide a high quality, competitive, and complete drive system. NORD motors are designed for across the-line or inverter/vector duty operation. NORD motors are constructed with superior insulating methods to provide excellent moisture protection, low temperature rise, and voltage spike resistance in accordance with NEMA MG1. Low rotor inertia and high starting torque allow peak performance in difficult applications involving high start/stop cycling rates or rapid acceleration/deceleration. Standard motors offer protection from the elements with many standard and optional design features.

NORD offers a variety of high performance motors including:

- NORD continuous duty, premium efficient motors (1–75 HP) satisfy global energy efficiency mandates, NORD's premium efficient motors provide maximum energy savings, offer low rotor inertia, provide quick starts & stops, & handle high cycle rates in dynamic applications.
- NORD 60 minute duty motors (1 - 40 HP) motors are labeled "60 MIN" duty & are perfectly suited for intermittent or time limited applications. These motors offer higher cycling capacity, lower motor rotor inertia, & lower energy consumption while starting or stopping, as comparedto the NORD Premium Efficient motors. NORD can also provide motors that satisfy other periodic duty or intermittent duty ratings.
- NORD continuous duty, standard efficient motors (0.16 – 0.75 HP) satisfy global energy efficiency mandates. Like 60 minute duty motors, these motors offer higher cycling capacity, lower motor rotor inertia, and lower energy consumption while starting or stopping, as compared to the NORD Premium Efficient motors.

Motor Production

Motor Production

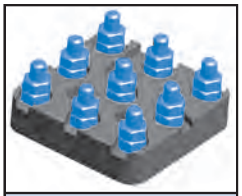

9 Post Terminal Block

Some of the standard design benefits include:

- Shaft lip seals on both ends of the motor shafts.
- Stator to endbell connections sealed to exclude moisture.
- Double coated magnetic wire insulation.
- Inverter/vector duty insulation system conforms to NEMA MG1, section 31.4 voltage spikes.
- Moisture resistant varnish dipped windings with improved varnish materials.
- Inorganic insulating components for tropical protection.
- Conduit box sealed with gaskets.
- Corrosion resistant alloy materials.
- Threaded cable entry holes.

Asynchronous Low Voltage Motors

The motors listed in this catalogue are low voltage asynchronous motors, which can be used as gear motors or stand-alone motors.

Non-Sparking Fan

The standard NORD motor fan is a non-sparking design. The fan will also provide proper airflow in either direction of rotation.

Terminal Block

Each NORD motor uses a terminal block, which is a superior method of wire termination when compared to pigtail leads. A terminal block ensures long-term reliability of the power connections.

Inverter/Vector Duty – Voltage Spikes

All NORD motors are constructed with an insulating system designed to withstand the repeated voltage spikes generated by modern AC vector drives. The insulation system withstands the ratings in conformance with NEMA MG1 Section 31.4.4.2 Voltage Spikes.

$V_{peak} \le 3.1 \times V_{rated}$ with a Rise time ≥ 0.1μs.

Standard Design & Construction

Insulation System

Insulation System

The NORD motor insulation system is designed to provide a superior degree of protection. NORD utilizes the following insulation components:

- Magnet wire – double coated insulation
- Varnish dip impregnation
- Slot liners
- Phase paper & separators
- Top sticks
- Wire sleeve connectors

Other motor manufacturers eliminate some of these insulating components for cost reduction which leads to less reliability.

Tropical Protection (Anti-fungal)

As a standard the NORD motor insulation system is tropically protected. The insulating and construction components are made of inorganic materials that resist fungal growth.

Low Inertia

The motor inertia in all NORD motors is extremely low which allows for an increased dynamic motor control capability. Low motor inertia is a significant advantage when using NORD motors with AC vector drives or controllers. NORD motors have the ability to cycle more frequently and require less mechanical energy to start than the standard NEMA frame motors. This leaves more energy to start the load.

High Starting Torque

NORD motors produce a higher starting torque than what is required by NEMA standards. This is achieved through improved motor winding, rotor design and construction.

Service Factor

NORD standard motors that are rated 230/460V-60Hz and 332/575V-60Hz have a service factor of 1.15. All other motors have a service factor of 1.0 or as noted in the motor rating tables beginning on page 315.

Poles / speeds

NORD offers a variety of single and two speed motors in addition to the standard 4 pole motor. NORD single speed motors are inverter/vector duty rated, however, it is not recommended to run a NORD two speed motor with an AC vector drive.

Number of Poles	Synchronous Speed at 60Hz	Synchronous Speed at 50Hz
Single Speed Motors		
4	1800 rpm	1500 rpm
2	3600 rpm	3000 rpm
6	1200 rpm	1000 rpm
Two Speed Motors		
4-2 - single winding	1800/3600 rpm	1500/3000 rpm
8-2 - dual winding	900/3600 rpm	750/3000 rpm

Other speeds available upon request.

Voltage and Frequency Variation

Voltage and frequency variations are based upon the assumption that the nameplate horsepower will not be exceeded and that the motor temperature may increase. Standard allowable deviations are based upon the type of motor labeling.

Poles	Efficiency	50 Hz NORD Motors			60 Hz NORD Motors		
		Motor Size Range	Power Range	Nominal Voltage	Motor Size Range	Power Range	Nominal Voltage
4	Standard (IE1)	63 S/4 - 100 L/4	0.12 - 2.2 kW	230/400 V Δ/Y	63 S/4 - 200 LX/4	0.16 - 40 Hp	230/460 V Y/YY
		100 LA/4 - 200 LX/4	3 - 30 kW	400/690 V Δ/Y			332/575 V Δ/Y
	Premium Efficient (IE3)	80 LP/4 - 100 LP/4	0.75 - 2.2 kW	230/400 V Δ/Y	80 LP/4 - 180LP/4	1 - 30 HP	230/460 V Y/YY
		100 AP/4 - 180 LP/4	3 - 22 kW	400/690 V Δ/Y			332/575 V Δ/Y
4-2	Standard (IE1)	63 S/4-2 - 160L/4-2	0.10/0.15 - 13/17 kW	400 V Δ/YY	63 S/4-2 - 132 M/4-2	0.13/0.20 - 8.7/10.7 HP	230V or 460V or 575V Δ/YY
8-2		71 S/8-2 WU - 132 M/8-2 WU	0.045/0.22 - 1.4/5.5 kW	400 V Y/Y	71 S/8-2 WU - 132 M/8/2 WU	0.06/0.3 - 1.9/7.4 HP	230V or 460V or 575V Y/Y

NEMA and CSA Labeled Motors

Variations are based upon the nominal utilization voltage, and not the service (supply) voltage as per ANSI C84.1. Voltage and frequency tolerances follow the guidelines set forth in NEMA MG-1.

Service Voltages	Utilization Voltages	Voltage Variation	Frequency Variation	Voltage/Frequency Variation
120V	115V	+/- 10%	+/- 5%	+/- 5%
208V	200V			
240V	230V			
480V	460V			
600V	575V			

50Hz CE Labeled Motors

Standard NORD motors are designed in accordance with IEC 60034-1, It is common practice to display the rated voltage on the motor nameplate. Alternatively, the allowable voltage range may be displayed on the motor nameplate. Allowable voltage and frequency variations are as specified in the table below:

Motor Voltage	Voltage Tolerance	Allowable Voltage Range	Frequency Variation
230/400V	+/- 5%	220-240 / 380-420V	+/- 2%
400/690V	+/- 5%	380-420 / 660-725V	+/- 2%

Voltage harmonization was introduced to the European Union in 1983, as part of IEC 60038 (formerly IEC 38). From 1995-2008 a transition period allowed motors to be labeled with the “harmonized voltage” however a reduced allowable voltage tolerance was permitted by the IEC 60038 standard as displayed in the table below:

Previous Motor Voltage	Harmonized Motor Voltage	Voltage Tolerance
220/380V	230/400V	+6 / -10%
240/415V	230/400V	+10 / -6%
380/660V	400/690V	+6 / -10%

US and Canadian Standard (CUS)

CUS motor construction defines that NORD motors are constructed in accordance to UL 1004 (electric motors) and CSA C22.2 No. 100-04 (motors and generators) guidelines. This option is standard for 208, 230, 460, and 575 Volt operation at 60 Hz.

Motors nameplated with the CUS option will be marked UL and CSA indicating that the Underwriters Laboratories and CSA have tested and approved NORD motors according to both US and Canadian standards.

Insulation Class

NORD motors are constructed with a thermal class F insulating system. Theses motors are also designed for a class B temperature rise of up to 80°C. The use of class F insulation with a class B temperature rise provides increased operating life. Motors constructed with class H insulation are also available as an option.

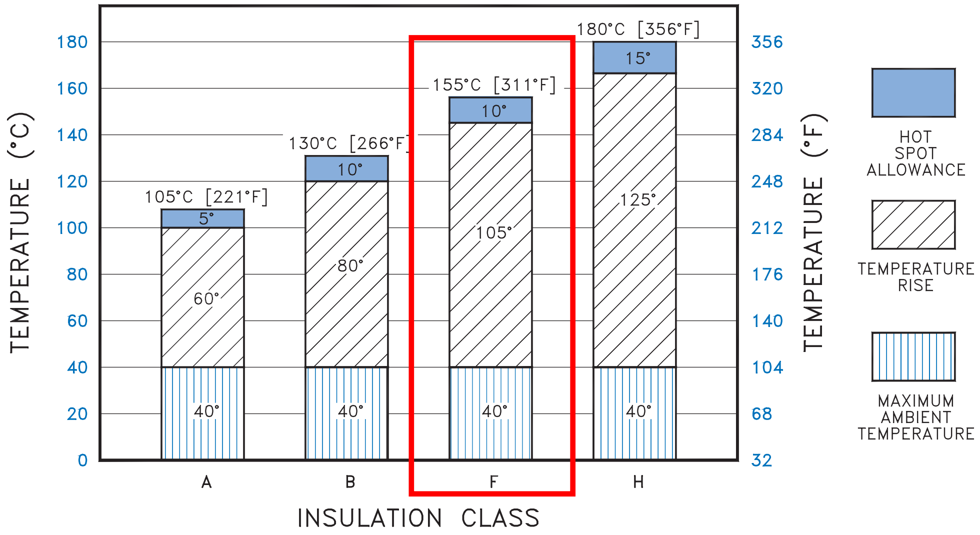

Ambient Temperature

NORD motors are designed to operate with a maximum ambient temperature of 40°C (104°F). If the motor's operating environment exceeds 40°C, the motor's nominal power P_n either needs to be de-rated (see table below) or upgraded insulation is required.

Ambient temp [°F]	113	122	131	140
Ambient temp [°C]	45	50	55	60
De-rate factor	0.96	0.92	0.87	0.82

Motor Rated Power = [P_n x De-rate factor]

Duty Classes

The following duty types are defined in IEC 60034-1.

Duty Type	Explanation Excerpts
S1	Continuous operation at a constant load, the motor reaches thermal equilibrium
S2	Short-time operation at a constant load for a given time followed by a time of rest until the motor is completely cooled down to ambient temperature. Example: S2-10 minutes Recommended values for determination: 10, 30 min.
S3	Sequential intermittent operation, identical run and rest cycles with a constant load. Temperature equilibrium is never reached. Starting current has little effect on temperature rise. The cyclic duration factor (cdf) indicates the portion of operation time in relation to a complete duty cycle. The typical duty cycle time is 10 minutes, unless otherwise specified. Example: S3-40% Recommended values for determination: 25, 40, 60%
S6	Continuous operation with intermittent load sequential, identical cycles of running with constant load and running with no load. No rest periods. Example: S6-40% Recommended values for determination: 25, 40, 60%

Power Increasing Factor for Short-term & Intermittent Operation

Motor ratings in this catalog are based on continuous duty operation (S1). If a motor is designed for S1 duty, but is to be operated for short-time or intermittent operation it can be subjected to higher loads. The available motor power can be raised above the motor rated power by the “increasing factor” in the table below.

Duty Type			Increasing Factor
S2	Operating time	10 min	1.40
		30 min	1.15
S3	Cyclic duration factor (cdf)	25%	1.33
		40%	1.18
		60%	1.08
S6	Cyclic duration factor (cdf)	25%	1.45
		40%	1.35
		60%	1.15

Motor Rated Power = [P_n x Increasing factor]

Standard Design & Construction

Protective Features

All NORD Motors and Speed Reducers are constructed to provide a high degree of protection against wet and severe environments. NORD motors and speed reducers are sealed against moisture ingress and use corrosion and moisture resistant components. NORD has recently made many enhancements in the motor and gear units standard construction to provide improved environmental protection. Many of the standard protection features of the NORD units are only available at an additional cost from other motor and gear drive suppliers. NORD designs all gearmotors, speed reducers and motors for installation in harsh industrial, commercial and municipal installation environments.

Motors for Indoor Operation - Option Codes

	Dry Conditions	Wet or Humid Conditions
Ambient Temp. Fluctuation	–	KB, SH
Paint	–	NSD+
Vertical Motor Mount 	RD	RDD

Motors for Outdoor Operation - Option Codes

	Sheltered from the Elements	Exposed to the Elements
Ambient Temp. Fluctuation	KB, SH	KB, SH, KKV
Paint	NSD+	NSDx3
Vertical Motor Mount 	RD	RDD

Option Code Key

KB	Condensation Drain Holes - Plugged
SH	Space Heater
KKV	Terminal Box Sealed with Resin
NSD+	NORD Severe Duty Paint
NSDx3	NORD Severe Extreme Duty X3 Paint
RD	Canopy Drip Cover
RDD	Double Fan Cover

Motor Connection Diagrams

NORD Frames 63-225
230 / 460V, 60Hz, 3Ø | 200 / 400V, 50Hz, 3Ø

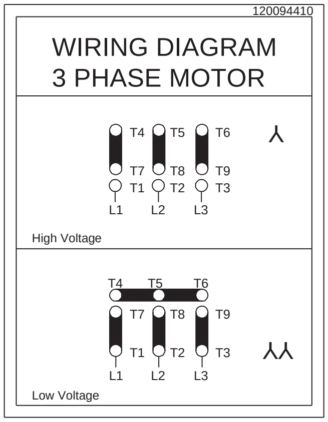

NORD Mfg by Siemens - Frames 200+
230 / 460V, 60Hz, 3Ø | 200 / 400V, 50Hz, 3Ø
190 / 380V, 60Hz, 3Ø |

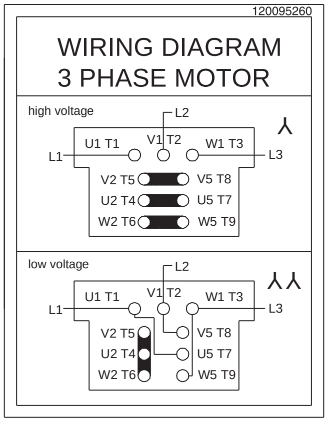

NORD Mfg by Siemens - Frames 200+
230 / 460V, 60Hz, 3Ø | 200 / 400V, 50Hz, 3Ø
190 / 380V, 60Hz, 3Ø |

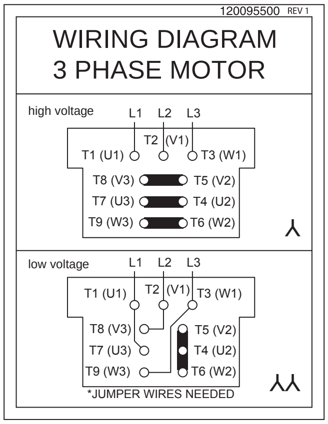

NORD Frames 63-225
460 / 800V, 60Hz, 3Ø | 230 / 400V, 50Hz, 3Ø
208 / 360V, 60Hz, 3Ø | 400 / 690V, 50Hz, 3Ø
332 / 575V, 60Hz, 3Ø |

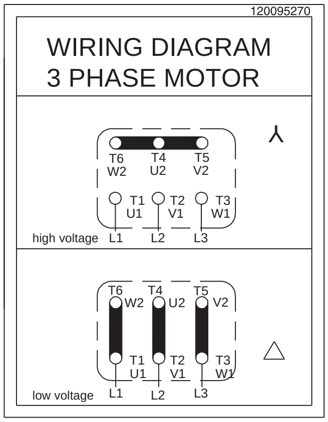

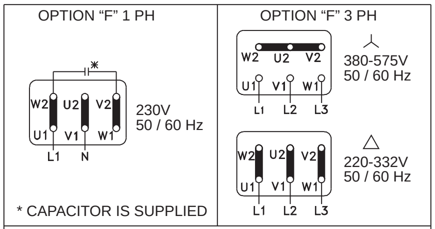

* CAPACITOR IS SUPPLIED

BLOWER COOLING FAN
"F" OPTION

120095250

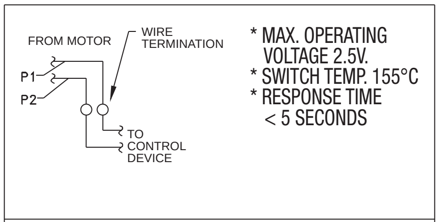

- * MAX. OPERATING VOLTAGE 2.5V.
- * SWITCH TEMP. 155°C
- * RESPONSE TIME < 5 SECONDS

THERMISTOR
"TF" OPTION

120095240

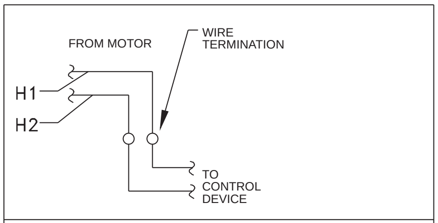

SPACE HEATER
"SH" OPTION

120095220

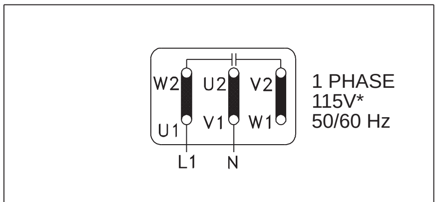

* CAPACITOR IS SUPPLIED

BLOWER COOLING FAN
"FC" OPTION

120095450

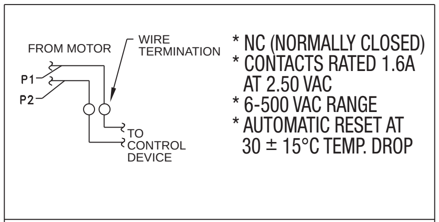

- * NC (NORMALLY CLOSED)
- * CONTACTS RATED 1.6A AT 2.50 VAC
- * 6-500 VAC RANGE
- * AUTOMATIC RESET AT 30 ± 15°C TEMP. DROP

THERMISTATS
"TW" OPTION

120095230

Motor Options

Motor Options & Construction

NORD motors are stocked in one of two ways. The first method is to stock a complete motor that is ready to be assembled to a gear reducer or shipped as a stand alone motor. The second method, the motor is assembled from component parts. The M Modify next to a motor option designates that the option can be added to a complete motor by simple modification. The B Build next to a motor option indicates that the motor will need to be built from component parts in order to incorporate the motor option.

Motor Options

Abbreviation	Description	M Modify	B Build
AG	Absolute Encoder		✓
AICM	Additional Insulation		✓
ECR	Single Phase Motors, 60Hz		✓
EKK	Small Terminal Box	✓	
EP	Epoxy Dipped Windings		✓
F	Blower Cooling Fan	✓	
FC	Blower Cooling Fan	✓	
HR	Hand Wheel		✓
IG...P	Incremental Encoder		✓
ISO H	Class H Insulation		✓
KB	Condensation Drain Holes - Plugged		✓
KBO	Condensation Drain Holes - Open		✓
KKV	Terminal Box Sealed with Resin		✓
MG	Magnetic Encoder		✓
MS	Quick Power Plug Connector	✓	
OL	Totally Enclosed Non-Ventilated	✓	
OL/H	Totally Enclosed Non Ventilated without Fan Cover		✓
RD	Canopy Drip Cover	✓	
RDD	Double Fan Cover	✓	
RLS	Motor Backstop		✓
RS	Round Motor Power Connectors		✓
SH	Space Heater		✓
TF	Thermistor		✓
TW	Thermostat		✓
WE	2nd Shaft Extension on Fan Side		✓
WU	High Resistance Rotor		✓
Z	High Inertia Cast Iron Fan		✓
-	IP65 Enclosure Protection	✓	
-	IP66 Enclosure Protection	✓	
-	Paint Coatings	✓	
-	Pre-Fabricated Motor Power Cable	✓	

For detailed motor option information please refer to the M7000 motor catalog

Motor Type	P_n Full Load Power		n_n Full-Load Speed	I_n Full-Load Current			I_a/I_n Locked Rotor Current Ratio	NEMA Code Letter	T_n Full-Load Torque	T_a/T_n Locked Rotor Torque Ratio	T_k/T_n Break Down Torque Ratio	pf Power Factor	η Full Load Efficiency	J_m Rotor Inertia	Duty Cycle
				230V	460V	575V									
	[hp]	[kW]	[rpm]	[A]	[A]	[A]	[%]		[lb-in]				[%]	[lb-ft^2]	
Standard Efficient Motors															
63 S/4	0.16	0.12	1700	0.88	0.44	0.37	250%	F	5.93	2.7	3.5	0.66	52.0%	0.0050	S1 cont
63 L/4	0.25	0.18	1680	1.12	0.56	0.46	270%	E	9.38	2.3	2.5	0.71	57.0%	0.0066	S1 cont.
71 S/4	0.33	0.25	1710	1.56	0.78	0.66	310%	G	12.2	2.4	2.7	0.64	63.0%	0.017	S1 cont.
71 L/4	0.5	0.37	1720	1.90	0.95	0.80	350%	F	18.3	2.3	2.7	0.69	71.0%	0.020	S1 cont.
80 S/4	0.75	0.55	1710	2.70	1.35	1.12	350%	F	27.6	2.2	2.3	0.71	72.0%	0.026	S1 cont.
80 L/4	1	0.75	1650	3.66	1.83	1.46	390%	G	38.2	2.2	2.3	0.74	70.0%	0.034	60 min
90 S/4	1.5	1.1	1660	4.84	2.42	1.94	490%	G	57.0	2.5	2.8	0.78	73.0%	0.056	60 min
90 L/4	2	1.5	1660	6.34	3.17	2.54	510%	H	75.9	2.5	2.8	0.80	74.0%	0.074	60 min
100 L/4	3	2.2	1705	9.00	4.50	3.63	490%	G	111	2.3	2.6	0.81	76.0%	0.107	60 min
100 LA/4	5	3.7	1725	15.2	7.60	6.10	510%	G	183	2.7	3.1	0.75	81.0%	0.142	60 min
132 S/4	7.5	5.5	1735	19.8	9.90	7.92	540%	G	272	2.4	2.7	0.82	85.0%	0.570	60 min
132 M/4	10	7.5	1735	25.8	12.9	10.3	630%	H	363	2.9	3.2	0.84	87.0%	0.759	60 min
160 M/4	15	11	1770	35.8	17.9	14.5	820%	J	534	2.9	3.8	0.85	90.7%	1.19	60 min
160 L/4	20	15	1760	48.4	24.2	19.3	850%	K	716	2.9	3.9	0.87	89.4%	1.59	60 min
180 MX/4	25	18.5	1760	59.0	29.5	23.6	880%	K	895	3.4	4.3	0.87	90.5%	1.90	60 min
180 LX/4	30	22	1765	74.4	37.2	29.8	890%	K	1071	3.6	4.4	0.80	92.8%	2.18	60 min
200 LX/4	40	30	1770	98.6	49.3	39.4	690%	H	1424	3.2	3.6	0.83	92.1%	3.80	60 min
Premium Efficient Motors															
63 SP/4	0.16	0.12	1695	0.72	0.36	0.29	400%	D	5.95	3.4	3.3	0.62	68.5%	0.0057	S1 cont.
63 LP/4	0.25	0.18	1705	1.08	0.54	0.43	430%	D	9.24	4.1	3.9	0.57	72.5%	0.0078	S1 cont.
71 SP/4	0.33	0.25	1725	1.26	0.63	0.50	590%	F	12.1	3.7	3.9	0.67	75.8%	0.0204	S1 cont.
71 LP/4	0.5	0.37	1725	1.62	0.81	0.65	610%	E	18.3	3.3	3.6	0.72	78.0%	0.0261	S1 cont.
80 SP/4	0.75	0.55	1735	2.30	1.15	0.92	610%	D	27.2	3.4	6.1	0.72	82.7%	0.0344	S1 cont.
80 LP/4	1	0.75	1730	3.14	1.57	1.26	650%	K	36.4	3.5	3.8	0.70	86.1	0.045	S1 cont.
90 SP/4	1.5	1.1	1740	4.20	2.10	1.68	840%	L	54.3	4.2	4.9	0.76	86.9	0.081	S1 cont.
90 LP/4	2	1.5	1730	5.60	2.80	2.24	760%	K	72.9	3.9	4.3	0.78	87.0	0.093	S1 cont.
100 LP/4	3	2.2	1770	7.68	3.84	3.07	920%	L	107	3.0	4.5	0.79	90.0	0.192	S1 cont.
112 MP/4	5	3.7	1755	13.0	6.50	5.20	950%	L	180	4.1	4.6	0.80	90.3	0.332	S1 cont.
132 SP/4	7.5	5.5	1770	19.5	9.75	7.80	1020%	M	267	4.7	5.0	0.77	91.7	0.759	S1 cont.
132 MP/4	10	7.5	1765	26.7	13.4	10.7	960%	M	357	4.7	5.0	0.77	91.7	0.831	S1 cont.
160 MP/4	15	11	1770	35.6	17.8	14.2	880%	K	534	3.2	3.8	0.84	92.5	1.59	S1 cont.
160 LP/4	20	15	1775	47.6	23.8	19.0	1080%	M	710	4.3	4.7	0.85	93.0	2.18	S1 cont.
180 MP/4	25	18.5	1780	60.6	30.3	24.2	1010%	L	885	3.9	4.0	0.82	93.6	3.80	S1 cont.
180 LP/4	30	22	1780	69.6	34.8	27.8	880%	K	1062	3.3	3.4	0.85	93.6	3.80	S1 cont.
225 RP/4	40	30	1785	-	49.5	39.6	890%	K	1420	3.4	3.8	0.81	94.5%	11.63	S1 cont.
225 SP/4	50	37	1785	-	59.7	47.8	880%	K	1752	3.0	3.7	0.82	94.6%	12.81	S1 cont.
225 MP/4	60	45	1785	-	72.0	57.6	910%	K	2131	3.3	3.6	0.83	95.2%	15.90	S1 cont.
250 WP/4	75	55	1785	-	84.4	67.5	920%	J	2604	2.9	3.2	0.86	95.4%	19.46	S1 cont.

With energy efficient gearing, inverter-duty motors, and AC variable frequency drives, NORD provides an intelligent energy saving product portfolio. NORD can be your partner in selecting motors to match each application for ideal performance and maximum energy savings. In keeping with this concept, NORD offers a variety of high performance motors including:

- NORD continuous duty, premium efficient motors (0.16 – 75 HP) satisfy global energy efficiency mandates, NORD's premium efficient motors provide maximum energy savings, offer low rotor inertia, provide quick starts & stops, & handle high cycle rates in dynamic applications.
- NORD 60 minute duty motors (1 – 40 HP) motors are labeled "60 MIN" duty & are perfectly suited for intermittent or time limited applications. These motors offer higher cycling capacity, lower motor rotor inertia, & lower energy consumption while starting or stopping, as comparedto the NORD Premium Efficient motors. NORD can also provide motors that satisfy other periodic duty or intermittent duty ratings.
- NORD continuous duty, standard efficient motors (0.16 – 0.75 HP) satisfy global energy efficiency mandates. They are exempt from the June 1, 2016 mandate requiring NEMA Premium Efficiency Levels (D.O.E. 10 CFR Part 431). Like 60 minute duty motors, these motors offer higher cycling capacity, lower motor rotor inertia, and lower energy consumption while starting or stopping, as compared to the NORD Premium Efficient motors.

Effective June 1, 2016, most general purpose, 1- 500 HP, continuous duty motors sold in the U.S., must meet NEMA Premium Efficiency Levels (D.O.E. 10 CFR Part 431). Intermittent-rated motors (60 Min. Duty) and fractional horsepower/totally-enclosed motors are exempt from this latest U.S. efficiency mandate; properly applied, these motors often lead to less energy consumption, especially during starts and stops.

Load Curves 80SP/4

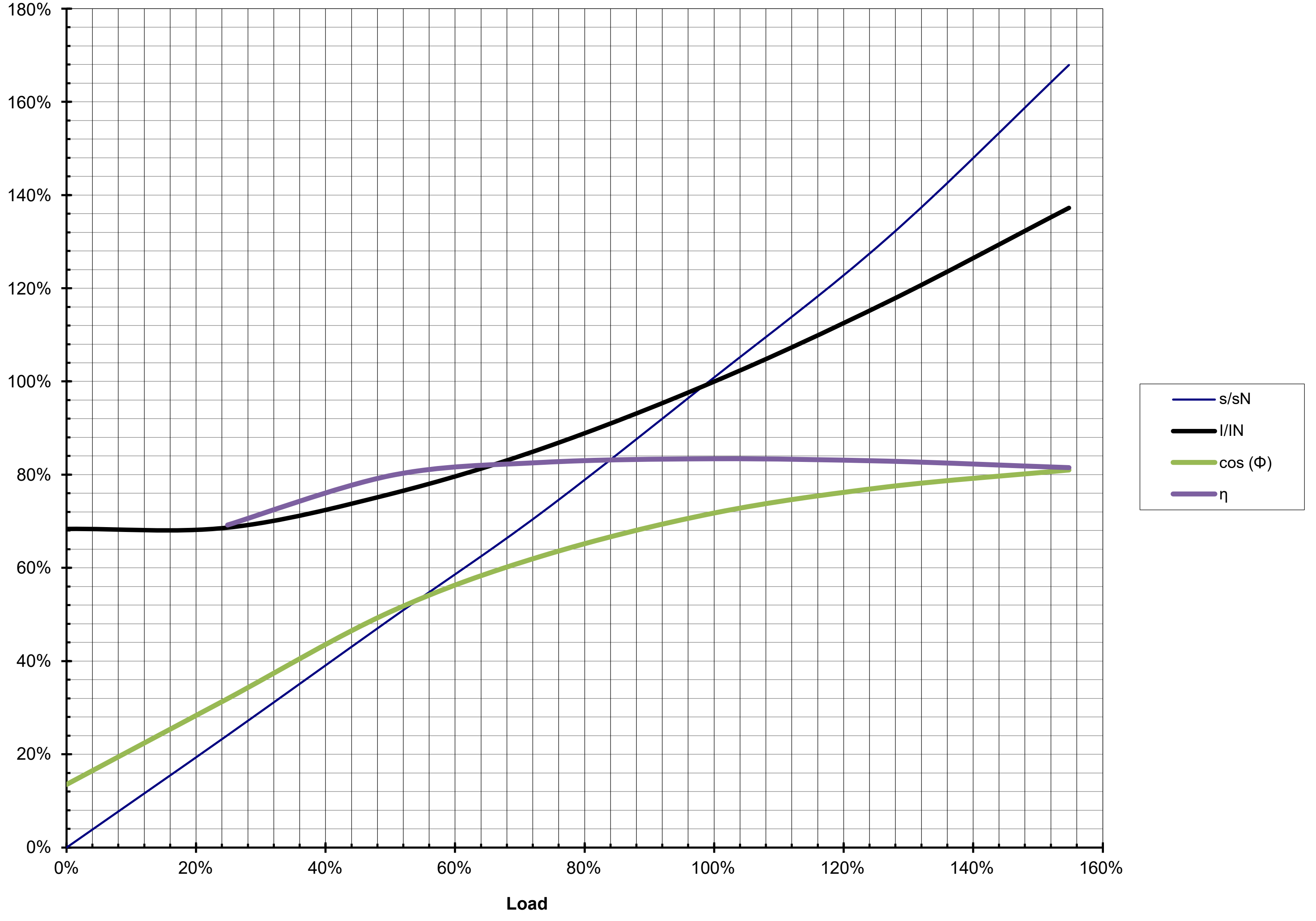

DRIVESYSTEMS

M_N = 3,03 Nm

n_N = 1735 r/min

f_N = 60 Hz

s_N = 3,6 %

I_N = 1,15 A

I_0 = 0,76 A

U_N = 460 V

P_N = 0,55 kW

230 / 460 V
YY / Y

Torque and Current over Speed curves

80 SP/4 CUS TW

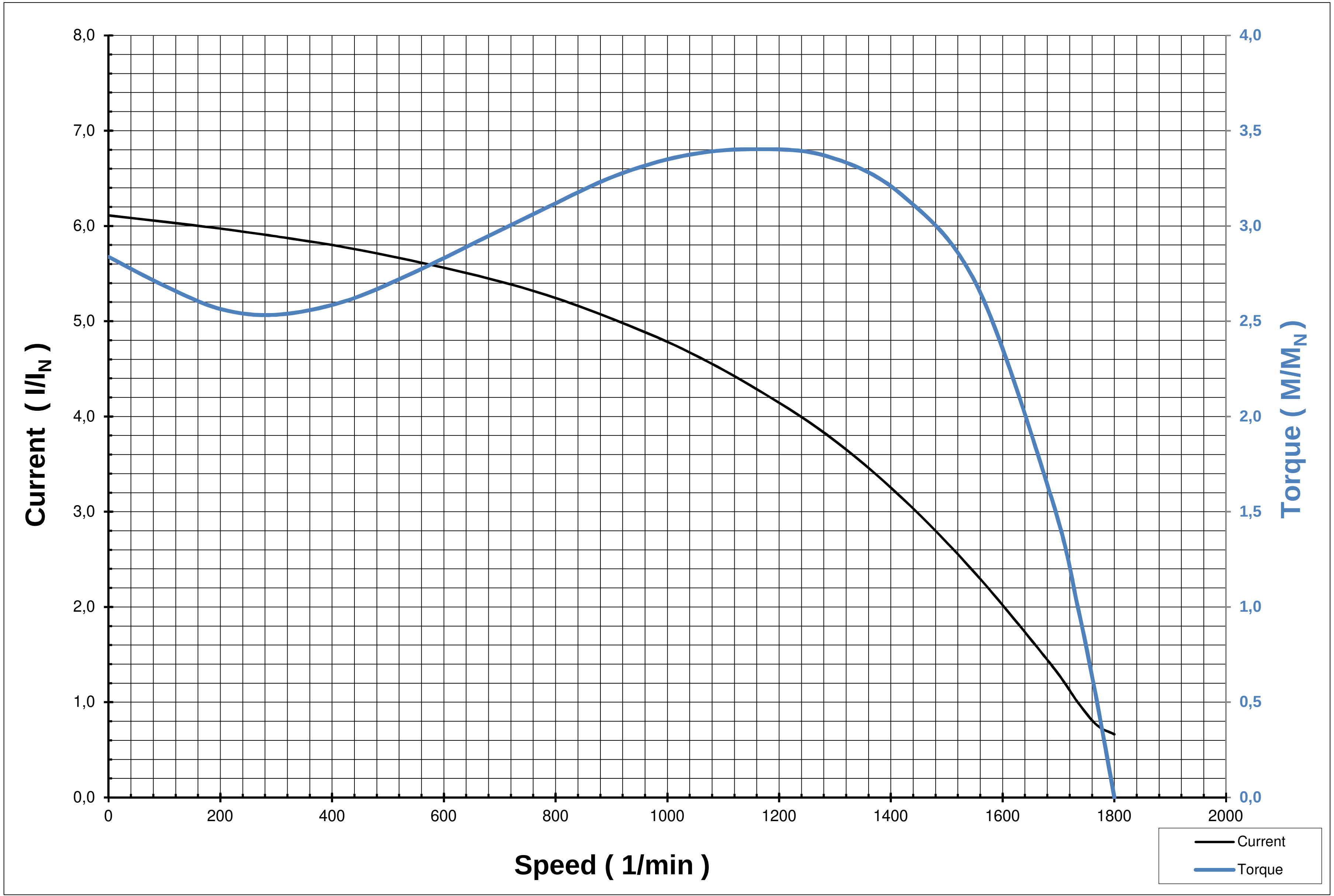

Stator:
13242526

Voltage (V):
460

Frequency (Hz):
60

Power (kW):
0,55

Load current (A):
1,15

Starting current (A):
7

No load current (A):
0,76

Starting torque (Nm):
8,59

Minimum torque (Nm):
7,67

Breakdown torque (Nm):
10,3

Load torque (Nm):
3,03

Connection:
Y

14.02.2019

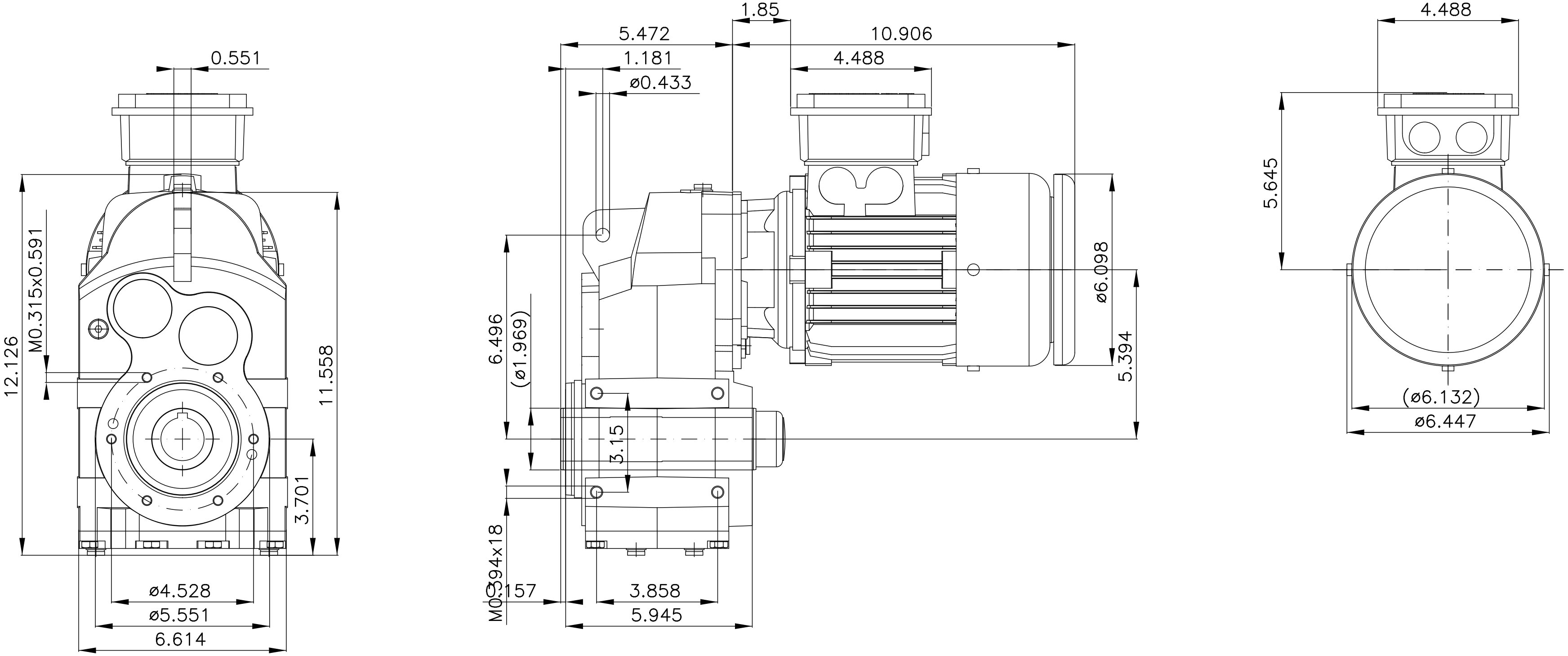

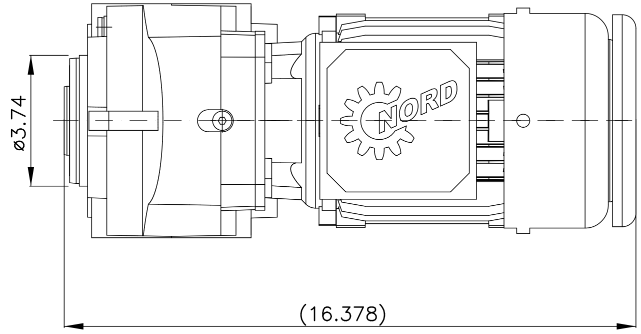

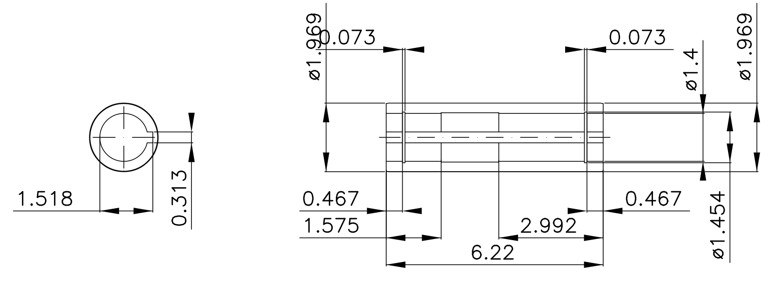

36

SK1382.1AXZ – 80SP/4 KB RD

B14: øe1=115

NORD

	Date	Name
Drawn	19.05.2022	SYSTEM

DRIVESYSTEMS

Nord Internet: http://www.nord.com

General tolerances DIN ISO 8062–3 – DCTG 9–12
This drawing is created with NORDCAD 9.2.6 DriveExpert – Technical changes reserved!

MOTOR DATA FORM

Equipment Name: SECONDARY CLARIFIER Equipment Number: 60-SDR-1

Site Location: Cottage Grove, OR

Nameplate Markings

Mfr Nord Mfr Model 80SP/4 Frame IEC 80 HP 0.75

Volts 460V Phase 3 RPM 1735 Service Factor 1.15

FLA 1.15 LRA 7.02 Freq 60hz Amb temp rating 40 degrees C

Time rating CONTINUOUS Design letter NEMA B

(NEMA MG1-10.35) (NEMA MG-1.16)

KVA code letter D Insulation class F

The following information is required for explosionproof motors only:

A. Approved by UL for installation in Class ________ , Div ________

B. UL frame temperature code ________ , Group ________ Atmosphere

(NEC Tables 500-2 and 500-2(b))

The following information is required for high efficiency motors only:

A. Guaranteed minimum efficiency at full load or NEMA efficiency index

(NEMA MG1-12.53b)

B. Nameplate or nominal efficiency ________

Data Not Necessarily Marked on Nameplate

Type of enclosure TEFC Enclosure material Aluminum

Temp rise 105 degrees C (NEMA MG1-12.41,42)

Space heater included? ____ Yes [✓ No], if Yes ____ watts ____ volts

Type of motor winding overtemperature protection, if specified:

None

Use the space below to provide additional information on other motor modifications, if specified:

PRIMARY SPEED REDUCER

Spanning the globe
To serve you

Since 1965, NORD has become well established in the power transmission industry and grown to global proportions on the strength of product performance, superior customer service, and intelligent drive solutions. NORD is constantly improving and expanding its products to meet a never-ending variety of industrial challenges.

NORD designs and manufactures drive systems engineered for adaptability. NORD's innovative drive solutions are specified and utilized for a range of applications in nearly every industry throughout the world.

NORD Drivesystems' product portfolio is extensive and continuously evolving in order to meet the needs of today's fast-changing markets. NORD's range of drive equipment includes: helical in-line, helical shaft-mount, helical-bevel, helical-worm and worm gear units with torques from 90 lb-in to 2,200,000 lb-in, readily available AC motors and from 1/6 HP to 250 HP, variable frequency drives up to 250 HP, and mechanical variable speed drives.

But NORD does far more than manufacture the world's finest drive components. We provide our customers with optimum drive configurations for their specific purposes, providing each and every one with truly complete and efficient systems at a price/quality ratio unmatched in today's competitive markets.

NORD makes its wide product range easily available through a global network that includes representation in over 60 countries. By providing all of our customers with prompt delivery, and expert support services, we are firmly committed to exceeding customer expectations and being responsive to the ideas and specifications of every customer, anywhere in the world.

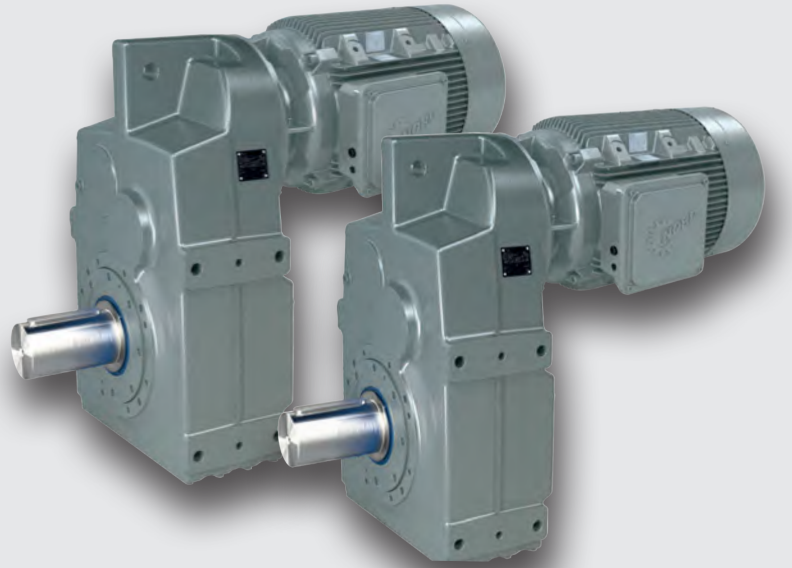

CLINCHER™ Parallel Shaft Gear Units

The CLINCHER™ Parallel Shaft gear units have an offset between the input and output shaft resulting in a shorter or flatter design in comparison with other gear units. The CLINCHER™ Parallel Shaft reducers and gearmotors feature a torsionally rigid UNICASE® housing. The CLINCHER™ gear units are available as foot, shaft or flange-mounted products. Modular design allows many input options including an integral motor, NEMA or IEC adapter, or a solid input shaft.

The CLINCHER™ Parallel Shaft gear units are also offered in a spread bearing/flange-mount (B5) design and are commonly specified on agitators, mixers, overhead conveyors and shredders. The lower bearing is an oversized, double row, re-greaseable spherical bearing designed to absorb high load conditions and provide longer service life. Clincher units include options for an oil-safe dry cavity or drywell design. The oil safe dry cavity contains any unlikely seal leaks from the reducer sump and is fitted with a site tube indicator or optional oil proximity switch to warn you if a leak occurs. The drywell design prevents oil leakage through the output flange by providing a physical barrier to separate the oil sump from the rotating equipment.

Features and Benefits

- Robust UNICASE® housing
- Case-hardened, high-quality gearing
- Oil-safe QUADRALIP™ seal system
- AUTOVENT™ regulates internal pressure and keeps contaminants out
- High performance inverter/vector duty motors & brakemotors
- Modular design for adaptability
- Spread-bearing / flange mount designs ideal for agitator, mixers, & overhead conveyor applications
- Optional screw conveyor package utilizing CEMA standards (G1129)
- Stainless steel (316) protective paint coating – USDA/H1 compliant
- Protective features and options for severe duty & washdown environments

CLINCHER™
Key Features

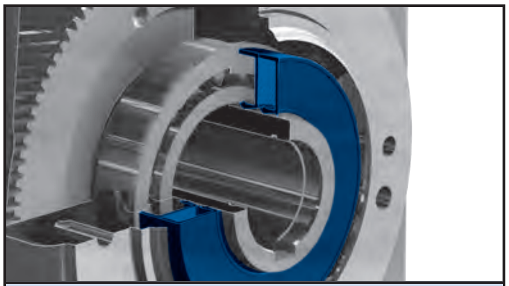

QUADRILIP™ Sealing

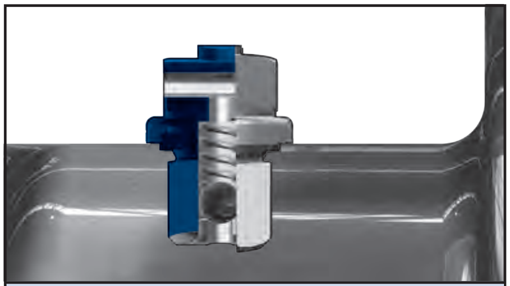

The Standard AUTOVENT™

CLINCHER Key Features and Product Range

The CLINCHER™ Parallel Shaft gearmotors and gear reducers feature a torsionally rigid UNICASE® housing that integrates internally ribbed construction features with bearing seats and mounting faces that are precisely machined in one set-up. The high-strength UNICASE® housings combined with high-capacity bearings and quality gearing provides precise shaft and gear alignment, quieter operation, and a longer operating life. NORD's CLINCHER™ gear units also feature the QUADRILIP™ seal system on the output shaft.

The QUADRILIP™ seal system includes an outer double lip seal with trash guard, single lip inboard seal and grease pack barrier between the seals to offer superior protection against oil leaks and outside contaminates. The standard Autovent™ breather helps to prevent oil contamination as well as bearing and gear damage by acting like a check valve. The breather blocks out foreign materials, allows a safe release of pressure when it is needed, and closes tightly when the pressure reaches a safe operating level.

CLINCHER™ modular designs are engineered to provide application adaptability. The available mounting options include: shaft-mount, flange-mount & foot-mounted products. Input options include: integral motor, NEMA or IEC adapter, servo motor adapter, solid input shaft, motor mount platforms and scoop mount platforms. The CLINCHER™ spread-bearing/flange-mount designs are ideal for agitator, mixer, as welll as overhead conveyor applications; these units feature an oversized, double row, re-greaseable spherical bearing designed to absorb high load conditions and provide longer service life. CLINCHER™ screw conveyor packages additionally provide CEMA standard shaft and flange mounting capabilities.

Product Range:

Sizes:	14
Power Range:	0.16 - 250 Hp
Efficiency:	97% (2-stage) / 95.5 % (3-stage)
Torque Range:	575 – 680,180 lb-in
Ratio Range:	4.03:1 – 6,616.79:1

Features:

- Robust UNICASE® housing
- Case-hardened, high-quality gearing (Rockwell 60 C typical / up to AGMA Class 13)
- Oil-safe QUADRALIP™ seal system
- AUTOVENT™ breather regulates internal pressure and keeps contaminants out
- High performance inverter/vector duty motors and brakemotors
- Modular design for application adaptability
- Spread-bearing / flange mount designs ideal for agitator, mixers, and overhead conveyor applications
- Optional screw conveyor package utilizing CEMA standards (Catalog G1129)
- Stainless steel (316) protective paint coating – USDA/H1 compliant
- Protective features and options for severe duty and washdown environments

Lubrication

Lubrication Types

Proper gearbox lubrication is essential in order to reduce friction, heat, and component wear. Lubricants reduce heat and wear by inserting a protective “fluid boundary” between mating parts and preventing direct metal to metal contact. Lubricants also help prevent corrosion and oxidation, minimize foam, improve heat transfer, optimize reducer efficiency, absorb shock loads and reduce noise.

Mounting position not only determines the proper fill-level but may also have some effect on final reducer assembly. If considering any mounting positions that are not shown as catalog-standard options, it is critical that the customer consult with NORD prior to ordering. Unless otherwise specified, NORD supplies most all gear units (*) factory-filled with the standard lubrication type and the appropriate amount of lubricating oil.

* Gear units SK10382, and SK11382 are supplied without oil.

Standard Oil Lubricants

ISO Viscosity	Oil Type	Ambient Temperature Range	Manufacturer Brand/Type	Notes
VG220	MIN-EP	0 to 40°C (32 to 104°)	Mobilgear 600XP220	💧❶
	PAO-EP	-35 to 60°C (-31 to 140°F)	Mobil SHC Gear 220	💧❷
	FG	-5 to 40°C (23 to 104°F)	Fuchs FM220	💧

Optional Oil Lubricants

ISO Viscosity	Oil Type	Ambient Temperature Range	Manufacturer Brand/Type	Notes
VG460	PAO-EP	-35 to 80°C (-31 to 176°F)	Mobil SHC Gear 460	-
	FG-PAO	-35 to 80°C (-31 to 176°F)	Mobil SHC Cibus 460	-
VG220	FG-PAO	-35 to 60°C (-31 to 140°F)	Mobil SHC Cibus 220	💧
VG150	PAO-EP	-35 to 25°C (-31 to 77°F)	Mobil SHC Gear 150	-

Grease Options (applied to greased bearings and seal cavities)

NLGI Grade	Grease Thickener	Grease Base Oil	Ambient Temperature Range	Manufacturer Brand/Type	Notes
NLGI 2	Li-Complex	MIN	-30 to 60°C (-22 to 140°F)	Mobil Grease XHP222	💧❶
	Li-Complex	PAO	-40 to 80°C (-40 to 176°F)	Mobil / Mobilith SHC 220	💧❷
	Polyurea	FG-PAO	-30 to 80°C (-22 to 176°F)	Mobil SHC Polyrex 222	💧

💧 Stocked Lubricants

❶ Standard product on serviceable gear units

❷ Standard product on maintenance free gear units ordered with and on units ordered with synthetic gear oil.

Oil Formulation Codes

MIN-EP	Mineral Oil with EP Additive
PAO	Synthetic Polyalphaolefin Oil
PAO-EP	Synthetic Polyalphaolefin Oil with EP Additive
FG	Food-Grade Oil
FG-PAO	Food-Grade, Synthetic Polyalphaolefin Oil

⚠ *IMPORTANT NOTES* ⚠

- Food grade lubricants must be in compliance with FDA 212 CFR 178.3570 and qualify as a NSF-H1 lubricant. Please consult with lubrication manufacture for more information.
- When making a lubrication change, check with the lubrication supplier to assure compatibility & to obtain recommended cleaning or flushing procedures.
- Do not mix different oils with different additive packages or different base oil formulation types. Polyglycol (PG) oils are not miscible with other oil types and should never be mixed with mineral oil, or Polyalphaolefin (PAO) oil.
- Please Consult NORD if considering cold-temperature oils below an ISO Viscosity VG100 or lower.

Ventilation

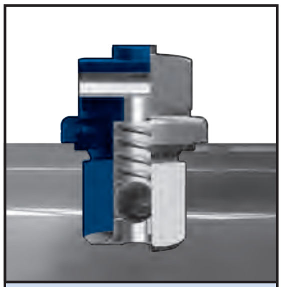

The Standard AUTOVENT™

Most gear reducers (except for SK0182NB, SK0282NB and SK1382NB) are equipped with a vent which helps compensate for air pressure differences between the inner space of the gear unit and the atmosphere.

The spring-pressure vent (AUTOVENT™) is commonly supplied and factory-installed. Normally open vents may also be supplied as an option; normally-open vents are closed upon delivery in order to prevent oil leakage during transport. When normally open vents are supplied, the sealing plugs must be removed prior to commissioning the reducer.

Prior to reducer start-up, it is important to check the maintenance manual to verify that the vent is properly located with respect to mounting position.

Mounting Position

The reducer mounting position determines the approximate oil fill-level and the appropriate vent location. In some cases mounting position may dictate possible variation in final reducer assembly.

If considering any mounting positions that are not shown as catalog-standard options, it is critical that the customer consult with NORD prior to ordering.

Oil Fill Quantities

Oil fill quantities shown in the catalog or maintenance instructions are approximate amounts. The actual oil volume varies depending upon the gear ratio. Prior to commissioning the reducer, the oil-fill level should be checked using the reducer's oil-level plug. It may be necessary to drain excess oil or add additional oil.

Unless otherwise specified, NORD supplies most all gear units factory-filled with the standard lubrication type per the specified mounting position. Gear units SK10382.1, and SK11382.1, are supplied without oil.

CLINCHER™ Oil Plug & Vent Locations

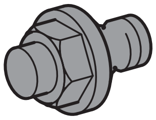

Oil plug connections

Prior to commissioning the reducer, check the oil-fill level using the reducer's oil-level plug and drain or add additional oil as needed. The minimum acceptable oil level is 0.15 in (4mm) below the oil level hole. ***For mounting orientations other than shown please consult NORD Gear. New plug locations may be required.***

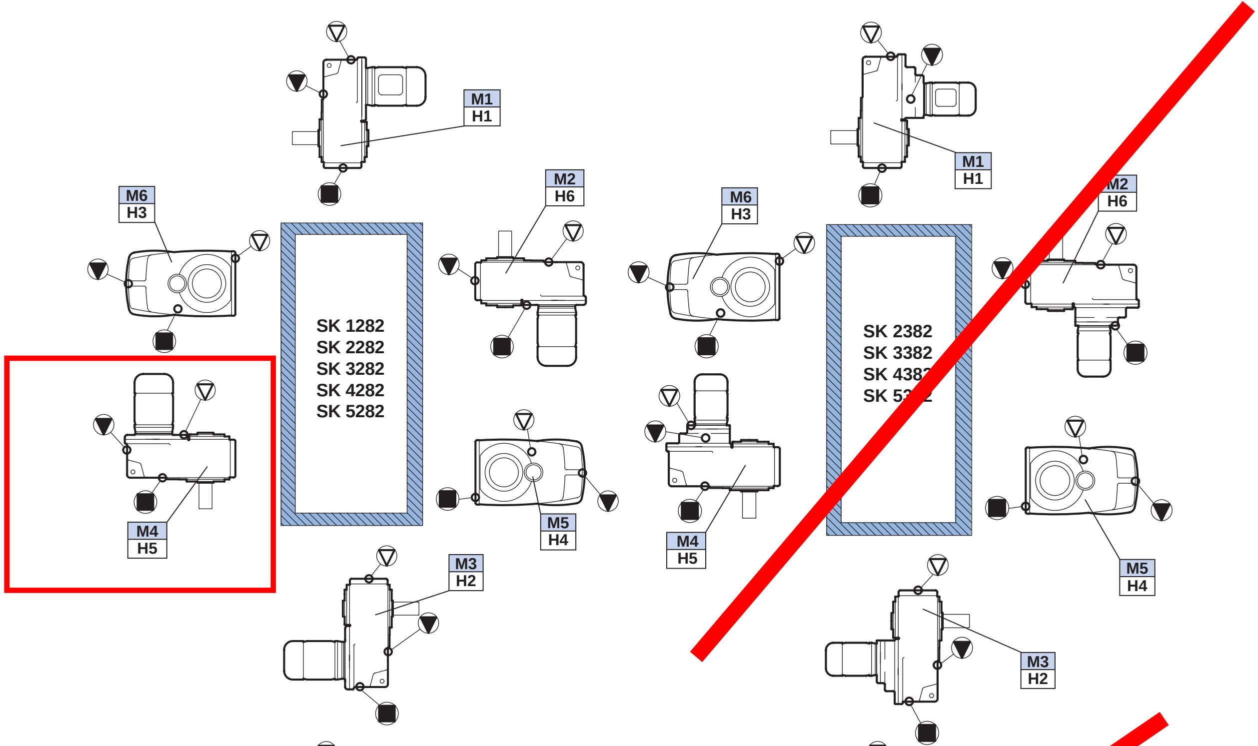

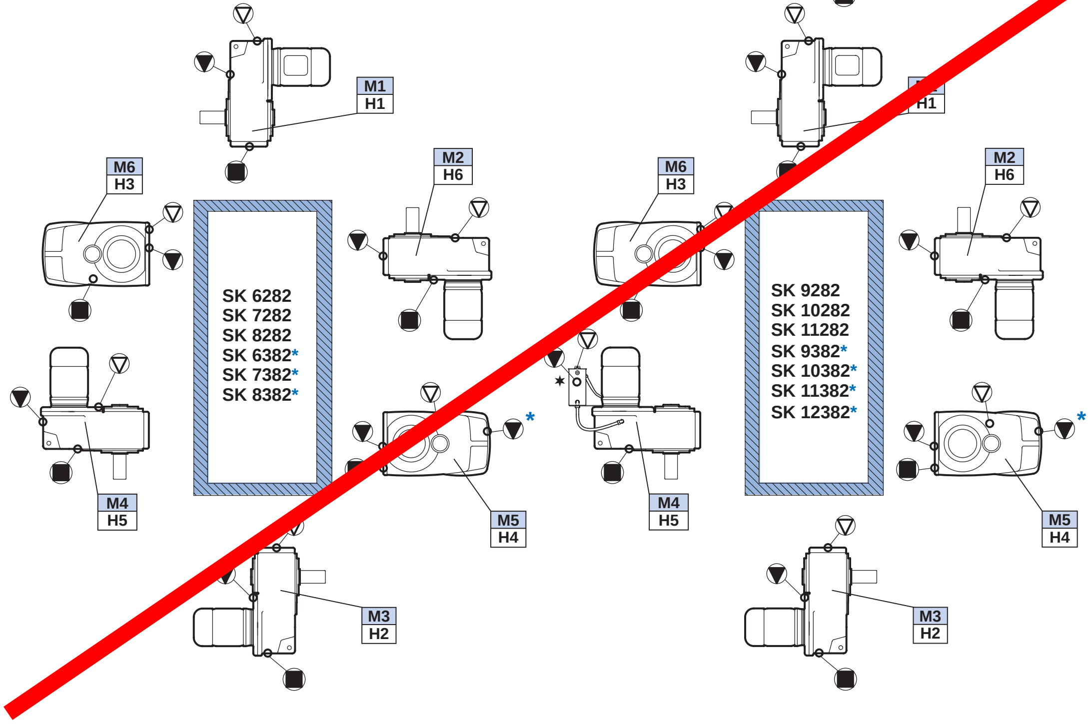

▽ = Vent **▼ = Oil Level** **■ = Oil Drain**

*** Oil level for 3 stage units**

✶ Oil level should be verified using the dip stick located in the oil tank for the M4/H5 position.

AUTOVENT™ (DR)

The AUTOVENT™ helps prevent bearing and gear damage by behaving like a check valve to block the entry of foreign material and prevent lubrication contamination from dust particles, moisture and air-borne process chemicals. The breather opens at approximately 0.3-0.9 psi during operation and closes tightly as the gearbox cools. This option is perfect for humid conditions and wash-down environments, helping to maintain proper oil cleanliness, while reducing foaming and oxidation.

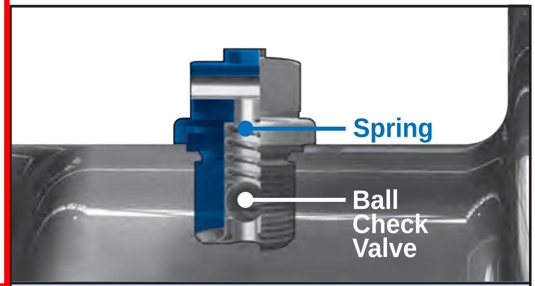

The Standard AUTOVENT™

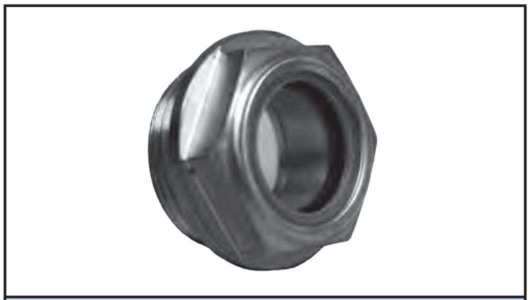

Oil Sight Glass (OSG)

Open Vent (OV)

An open vent can be optionally supplied on NORD reducers. The open vent allows for air pressure differences between the inner space of the reducer and the atmosphere. This open vent will be closed upon delivery to prevent oil leakage. Before the reducer is put in service the open vent should be activated by removing the sealing plug.

Filtered Vent (FV)

NORD offers a filtered vent, which allows gases to permeate, but does not allow dust and debris to pass through the vent.

Oil Sight Glass (OSG)

The oil sight glass provides a visible oil level indication on the reducer. The sight glass replaces the standard steel fill plug and consists of a sealed clear porthole centered in the middle of a brass plug. The sight glass allows for quick oil level and color inspection.

Magnetic Drain Plug (MDP)

Magnetic drain plugs attract and hold ferrous metal particles that may circulate inside the reducer's lubrication system. These potentially abrasive particles may cause excessive wear in the reducer if they remain circulating. An increase of collected material may be a warning sign of future problems.

Special Drain Plugs

NORD can offer specialized oil drain plugs and solutions. Some of these solutions include spring loaded right-angle valves, straight valves, with or without covers as well as other fitting types.

Additional Drain Plug Hole (ADP)

NORD can add an additional drain hole to the reducer housing for a small surcharge if required for special oil plumbing needs.

Long Term Storage (LL)

Speed reducers are frequently put in storage prior to installation for long periods of time and in some cases exposed to the elements. NORD's long term storage option protects the unit from moisture or corrosion by coating all unpainted surfaces with a dry, transparent, durable waxy film. Once installation is necessary this waxy film can be easily removed with a commercial de-greaser or petroleum solvent. If possible the store room should be vented and dry, with room temperatures between 23ºF and 104 ºF (-5 ºC and 40 ºC).

Gear Unit Options

Nord Products on the Paint Line

NSD+ on Aluminum

NSDX3 on Aluminum

NSD+ on Cast Iron

NSDX3 on Cast Iron

Paint Coatings and Surface Protection

NORD's standard paint coating is a two component, aliphatic polyurethane finish containing 316 stainless steel material. This gray stainless steel paint has excellent appearance and outstanding physical properties. It is suitable for both indoor and outdoor applications.

Advantages of NORD's stainless steel two component polyurethane:

- Excellent adhesion to cast iron, aluminum, steel, and plastics
- Excellent corrosion resistance
- Excellent chemical resistance
- Excellent gloss and color retention
- Suitable for indoor and outdoor exposure
- Nonporous and excellent abrasion resistance
- Suitable for use in a USDA inspected facility

Finish	Standard Colors	Coating	Use
Standard (stainless steel paint)	Stainless steel silver (Gray)	1 x Stainless steel (316) top coat (polyurethane)	Indoor or outdoor moderate environment
Alternate color	Black, Blue, Red, Orange	1 x Color top coat (polyurethane)	Indoor or outdoor protected

Paint free design Gear Units (SK0182.1NB-SK0282.1NB & SK1382.1NB)

Our NB gear unit sizes are made from corrosion resistant aluminum alloy and feature a smooth body design. The smooth aluminum alloy surfaces have natural corrosion protection; therefore paint coatings are not required. Paint coatings may optionally be applied.

Cast Iron Gear Units (SK1282 - SK11382.1)

The SK1282-SK11382.1 gear units are made from class 35 gray cast iron and are painted with NORD's stainless steel paint.

Additionally a variety of coating options are available including our severe duty coatings.

nsdx3

Improved corrosion protection for wet and outdoor environments starts by applying a primer undercoat over the primed cast-iron or base aluminum materials. The finish is then completed with our exceptional strength stainless steel polyurethane top coat.

NORD Severe Duty + (NSD+)	Stainless steel silver (Gray)	1 x Primer high solid alkyd system 1 x Stainless steel (316) top coat (polyurethane)	Indoor or outdoor moderate environment
NORD Severe Duty +W (NSD+W)	White	1 x Primer high solid alkyd system 1 x White top coat (polyurethane)	Indoor or outdoor moderate environment
Alternate color (NSD+)	Black, Blue, Red, Orange	1 x Primer high solid alkyd system 1 x Color top coat (polyurethane)	Indoor or outdoor moderate environment

nsdx3

For more demanding environments our multi-layer corrosion protection starts with a primer undercoat over the base material and then adding our stainless steel polyurethane coating and a high-gloss topcoat.

NORD Severe Duty Extreme (NSD-X3)	Stainless steel silver (Gray)	1 x Primer high solid alkyd system 1 x Stainless steel (316) (polyurethane) 1 x Clear top coat (polyurethane)	Indoor or outdoor more severe environment
NORD Severe Duty Extreme (NSD-X3W)	White	1 x Primer high solid alkyd system 1 x White (polyurethane) 1 x Clear top coat (polyurethane)	Indoor or outdoor more severe environment
Alternate color (NSD-X3)	Black, Blue, Red, Orange	1 x Primer high solid alkyd system 1 x Color (polyurethane) 1 x Clear top coat (polyurethane)	Indoor or outdoor more severe environment

P_1 [hp]	n_2 [rpm]	M_2 [lb-in]	f_B	i_{ges}	F_R [lb]	F_A [lb]	$F_{R\,VL}$ [lb]	$F_{A\,VL}$ [lb]	Type	lbs
0.50	14	2320	0.8	126.98	1380	1120			**SK 0282.1 - 71 LP/4**	34
	16	2027	0.9	110.96	1430	1120				
	17	1898	0.9	103.89	1450	1120				
	19	1690	1.0	92.51	1420	1120				
	23	1383	1.3	75.69	1370	1120				
	26	1218	1.5	66.66	1340	1120				
	33	969	1.6	53.03	1260	1120				
	39	800	2.2	43.78	1220	1120				
	45	697	2.5	38.14	1180	1120				
	52	611	2.9	33.44	1140	1120				
	58	540	3.3	29.56	1100	1120				
	66	481	3.7	26.32	1070	1120				
	80	393	4.5	21.53	1010	1120				
0.50	27	1170	0.8	64.03	1060	1300			**SK 0182.1 - 71 LP/4**	29
	30	1067	1.1	58.43	1070	1300				
	35	904	1.3	49.46	1030	1300				
	39	803	1.4	43.98	1010	1300				
	45	705	1.6	38.61	980	1300				
	51	623	1.8	34.13	950	1300				
	54	581	2.0	31.80	940	1300				
	62	510	2.3	27.92	910	1300				
	70	451	2.6	24.68	880	1300				
	77	410	2.6	22.43	860	1300				
	87	362	2.9	19.83	830	1300				
	106	297	3.9	16.24	790	1300				
	121	260	4.4	14.25	760	1300				
	132	238	4.8	13.05	740	1290				
0.75	11	4334	0.8	159.09	–	1620	1570	1620	**SK 1382.1 - 80 SP/4**	53
	13	3698	1.0	135.72	750	1620	1730	1620		
	14	3311	1.1	121.52	1090	1620	1820	1620		
	17	2825	1.3	103.68	1230	1620	1900	1620		
	18	2649	1.3	97.22	1270	1620	1930	1620		
	21	2260	1.6	82.94	1350	1620	1980	1620		
	25	1866	1.9	68.50	1410	1620	2030	1620		
	29	1642	2.2	60.26	1420	1620	2050	1620		
	32	1480	2.4	54.32	1390	1620	2060	1620		
	34	1401	2.5	51.41	1370	1620	2070	1620		
	39	1204	2.9	44.19	1330	1620	2080	1620		
	45	1053	3.4	38.67	1290	1620	2090	1620		
	53	899	3.9	32.99	1240	1620	2100	1620		
	61	778	4.6	28.54	1200	1620	2100	1620		

SECONDARY SPEED REDUCER

EP series
Imperial units

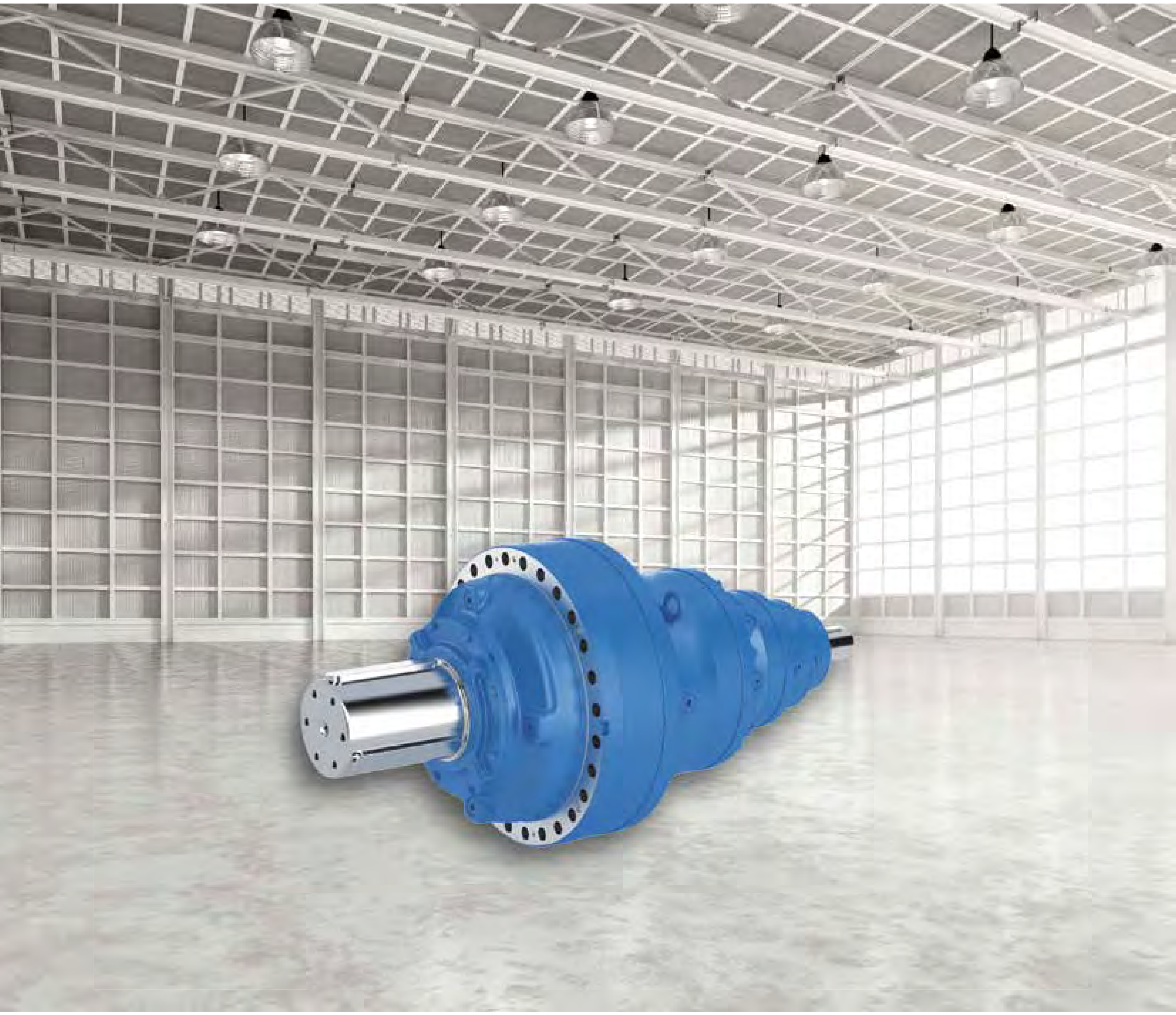

Planetary gear reducers and gearmotors
Imperial units

2591-01.02

1.1 - Design principles

Rossi planetary gear reducers offer cutting edge technology solutions. Drawing from experience on previous applications and using a comprehensive gear reducer range we offer engineered solutions for all industrial sectors. For over 60 years Rossi has been world wide known for its high quality products.

Our product is developed thinking about the continuous improvement of the following qualities:
- flexibility;
- reliability;
- sustainibility;
- total cost of use;
- performance;
- strength;
- user-friendly installation, transport and maintenance;
- service;
- safety.

1.2 - Main planetary gear reducer features

General

- 20 sizes with modular system;
- nominal torques T_{N2} according to R40/6 (interval by 40%);
- in line and bevel helical option;
- mounting with through holes flange (B5), integral feet, shaft mounting with torque arm;
- application flexibility more than shown on the catalog;
- modularity and adaptabilily;
- cylindrical or splined shafts, cylindrical or splined hollow shafts, shaft mounting and more;
- comprehensive transmission ratio range from > 3.5 to over 10 000;
- comprehensive accessories range (more than 20 different types);
- direct coupling with electric, hydraulic motors, cylindrical shaft;
- option combined with other Rossi gear reducers.

Finishing

- rational design;
- compactness;
- machining quality.

Design strength

- resistance to torque peaks;
- high radial and axial load capacity;
- high torsional stiffness;
- high thermal capacity in the category.

1.3 - Competitive advantages

Regular size and transmission ratio steps

- featuring engineered and technical efficient design of our gear reducers, with cutting edge technology and high quality of safety.
- facilitating assembly and periodical maintenance;
- improved painting processes;
- compactness (dimensions and weight);
- reducing transport costs;
- maximizing machine design optimization.

Modular system

- quick deliveries and service worldwide;
- excellent reliability/cost ratio.

Quality and precision

- safety;
- nearly maintenance free;
- low use cost;
- low noise;
- increased performance with the same dimensions and weights;
- value and resistance.

Easy installation, transport and maintenance

- reducing machine assembly times;
- reducing maintenance times.

1.5 - Main structural features

Modular system

- **20** sizes with modular system**:**
- nominal torques T_{N2} according to R40/6 (stepped by 40%);
- fastening with through holes flange (B5), with integral feet, shaft mounting with torque arm;

Train of gears

- 1, 2, 3 or 4 reduction stages for in line and 2, 3 or 4 stages for bevel design (5 stages on request);
- nominal transmission ratios to R 20 (3.55 ... 3 550) for coaxial, R 20 (9 ... 2 240) for bevel helical;
- external gear pair made of casehardened and hardened steel; internal gear made of nitrided steel;
- cylindrical spur gears with **ground** profile and flank modification;
- GLEASON spiral bevel gear pairs with **ground** profile;
- floating or supported planet carrier in through hardened steel or nodular cast iron according to gear reducer size;

Bearings

- **low speed shaft**, according to gear reducer size: taper roller bearings or spherical roller bearings for cylindrical and splined shaft end; taper roller bearings or full complement cylindrical roller bearings for hollow shaft with shrink disc and flange shaft; ball bearings or full complement cylindrical roller bearings for splined hollow shaft and hollow with keyway;
- **high speed shaft**: ball or cylindrical roller bearings according to sizes;
- **planet gears**: full complement roller bearings for the highest support stifness;

Housing

- made of nodular cast iron;

Lubrication

- internal protection in synthetic paint appropriate for resistance to mineral oil or to polyalphaolefines synthetic oil (PAO);
- oil bath lubrication; PAO based synthetic oil included in the supply for sizes 001A ... 021A (see ch. 8.6) with filler plug with valve; drain and level plug; sealed;

Sealing

- fluorinated seal rings on high speed shaft, as standard;

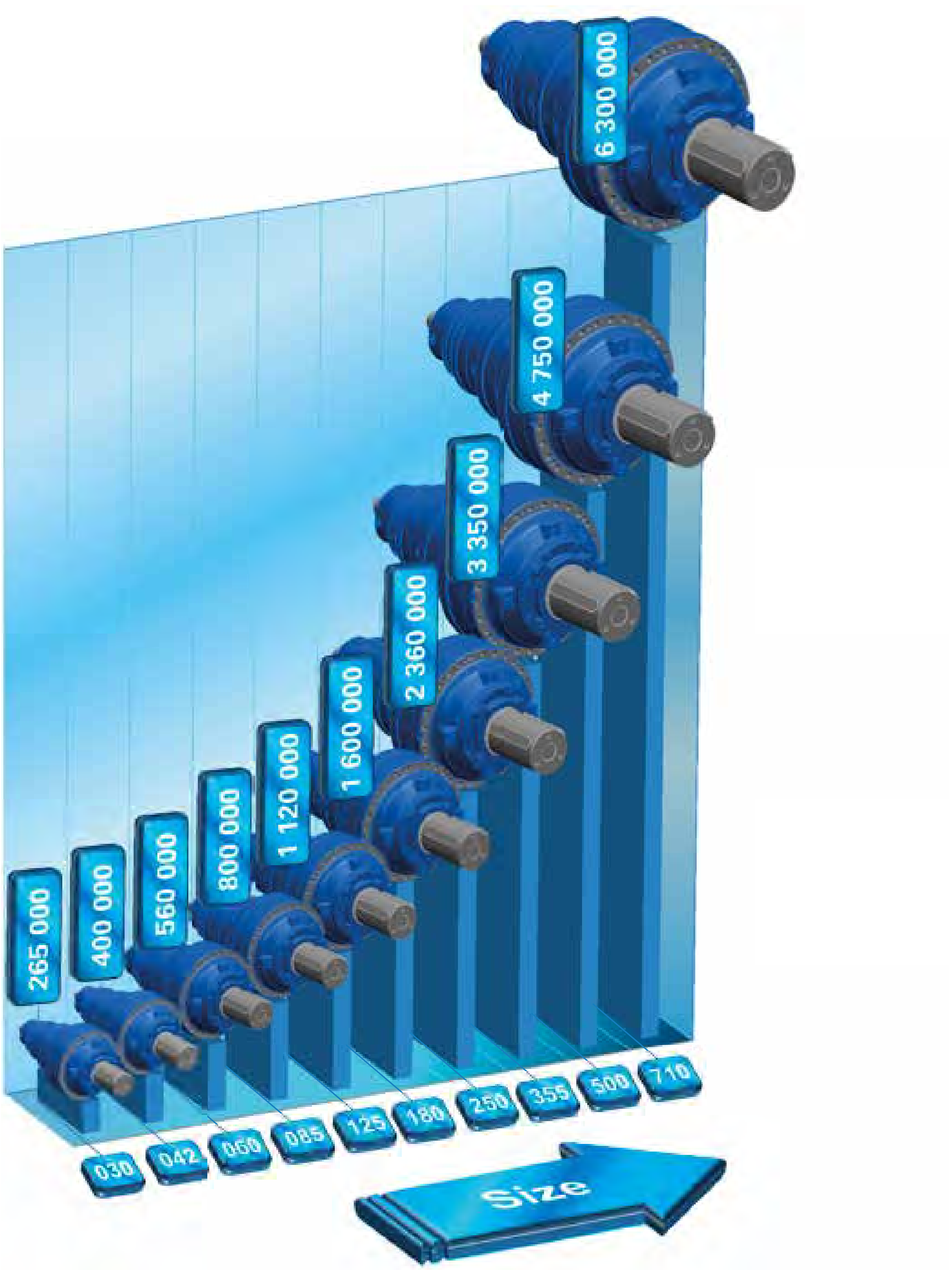

Painting:

Products are painted with water based dual compound polyurethane enamel resistant to atmospheric and aggressive agents (corrosivity category C3 ISO 12944-2); color blue RAL 5010 DIN 1843.

Specific standards:

- shaft heights to UNI 2946-68 (DIN 747-76, ISO 496-73);
- nominal transmission ratios and main dimensions according to UNI 2016 standard numbers (DIN 323-74, ISO 3-73);
- toothing profile to UNI 6587-69 (DIN 867-86, ISO 53-74);
- (long or short) cylindrical shaft ends derived from UNI ISO 775-88 (DIN 748, ISO/R 775); splined to DIN 5482 or DIN 5480;
- keys to UNI 6604-69 (DIN 6855-Bl.1-68, ISO/R 773-69);
- mounting positions derived from CEI 2-14 (DIN EN 60034-7, IEC 34.7);
- gear load capacity verified to ISO 6336;
- bearing load capacity verified according to ISO 281-2008.

2 – Design features

MODEL R 3EL 009A 77.7Y

Gear reducer size and ratio

R **3EL** **018A** **61,3Y**

TYPE OF RATIO

Y	catalog ratio
Z	ratio composition other than catalog

TRANSMISSION RATIO [1)]

STAGE COMPOSITION [1)]

A	catalog stage composition
X	stage composition other than catalog

SIZE

001 ... 710

TRAIN OF GEARS – PLANETARY

1EL	**2EL**	**3EL**	**4EL**
1 stage in line	2 stages in line	3 stages in line	4 stages in line
	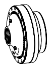	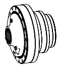	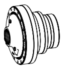
	2EB	**3EB**	**4EB**
	1 planet. and 1 bevel stage	2 planet. stages and 1 bevel stage	3 planet. stages and 1 bevel stage
	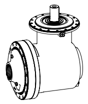	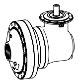	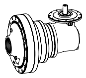

MACHINE

Designation example:

R 2EL 002A 45,2 Y C042M1 F10a C30×58 B5 ,...
R 2EL 009A 25,9 Y S070M1 P10c I55×400 B3 ,...
R 3EB 030A 68,3 Y H120M1 A10e J38×58 B53 ,...

1) More stage compositions and ratios are available on request. Use selection software or consult us.

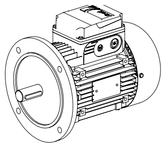

When gearmotor is supplied with a Rossi standard motor, please state motor designation according to catalog TX.
For terminal box position refer to ch. 6.

C080M1 F10C

Output — Brake — Input

C100M1 F10d PB10 - 0340 I38×300 UH SA1 B5 ,...

ACCESSORIES

,SW... stop washer

,SB... splined bush

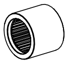

,WF... wheel flange

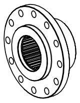

,SC... splined bar

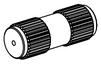

,TA... torque arm

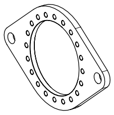

,SD... shrink disc

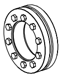

,FB... foot bracket

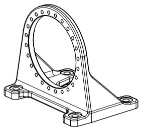

,R... pinion gear

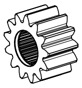

. . . others see ch. 6, 7

BRAKING TORQUE

BRAKE MODEL PB10, PB30, PB90

MOUNTING POSITION

B5, B51, V1 ...

SHAFT / COUPLING DIMENSIONS

INPUT

I... IEC electric motor adapter

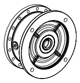

C... cylindrical shaft end

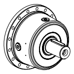

V... cylindrical with fan

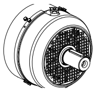

J... bevel shaft end

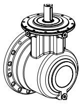

U... universal adapter

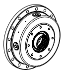

UN... NEMA electric motor adapter

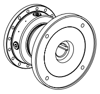

UH... hydraulic motor adapter

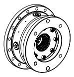

OUTPUT MODEL

10, 20, 30 ...	model
a ... z	coupling dimensions

MOUNTING

F flange mounting

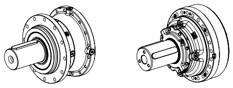

A shaft mounting

P foot mounting

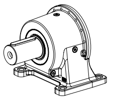

OUTPUT SHAFT DIMENSIONS

38 ... 320	shaft diameter
M, I	metric / imperial system units (see ch. 5)
1 ... 9	model

SHAFT END

C cylindrical

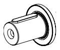

S splined

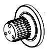

H hollow for shaft mounting

M flanged

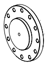

K hollow with keyway

Z splined hollow shaft

T output flange shaft

X non-standard design

Determining the gear reducer size by life factor ($n_2 \cdot L_h$)

- Make available all necessary data: required output torque T_2 of gear reducer, speed n_2, required transmission ratio *i*, running conditions (type of load, running time, frequency of starting *z*, other considerations);
- Determine service factor *fs* on the basis of running conditions (see page 2.4).
- Calculate the life factor: $n_2 \cdot L_h$ where:
  n_2: output required speed [rpm]
  L_h: required gear reducer life [h]
- Select the gear reducer size (also, the train of gears and trasmission ratio *i* at the same time) on the basis of $n_2 \cdot L_h$, i_N and of a torque T_{N2} greater than or equal to $T_2 \cdot fs$;
- Calculate power P_1 required at input side of gear reducer using the formula $\frac{P_2}{\eta}$, where η is gear reducer efficiency (see page 2.9). When power P_1 applied at input side of gear reducer turns out to be higher than the power required (considering motor/gear reducer efficiency), it must be certain that this excess power applied will never be required, and frequency of starting z is so low as not to affect service factor.

Otherwise, make the selection by multiplying P_{N2} by $\frac{P_{1\ \text{applied}}}{P_{1\ \text{required}}}$

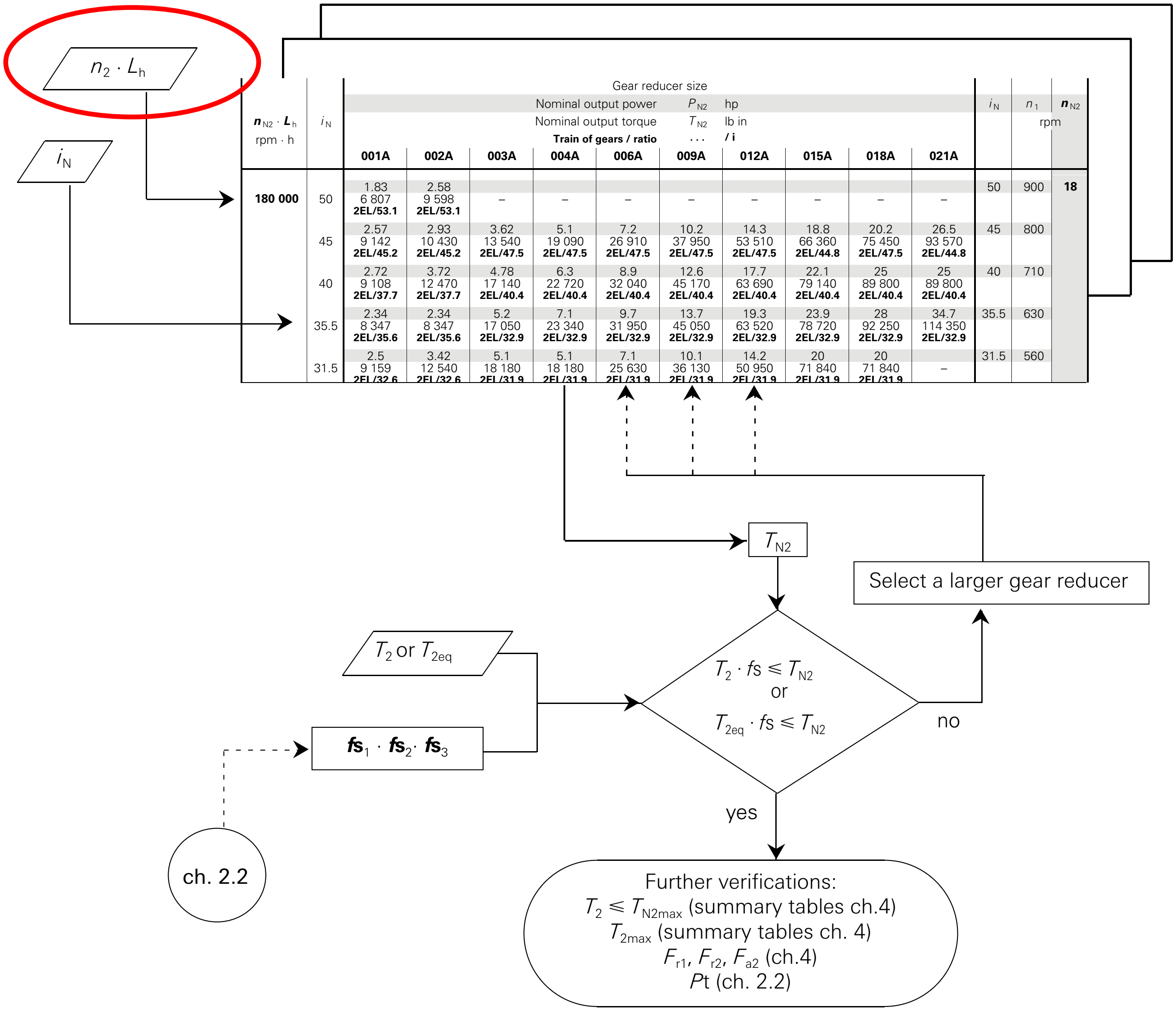

Gear reducer size
Nominal output power P_{N2} hp
Nominal output torque T_{N2} lb in
Train of gears / ratio . . . **/ i**

$n_{N2} \cdot L_h$ rpm · h	i_N	**001A**	**002A**	**003A**	**004A**	**006A**	**009A**	**012A**	**015A**	**018A**	**021A**	i_N	n_1 rpm	n_{N2} rpm
180 000	50	1.83 6 807 **2EL/53.1**	2.58 9 598 **2EL/53.1**	–	–	–	–	–	–	–	–	50	900	**18**
	45	2.57 9 142 **2EL/45.2**	2.93 10 430 **2EL/45.2**	3.62 13 540 **2EL/47.5**	5.1 19 090 **2EL/47.5**	7.2 26 910 **2EL/47.5**	10.2 37 950 **2EL/47.5**	14.3 53 510 **2EL/47.5**	18.8 66 360 **2EL/44.8**	20.2 75 450 **2EL/47.5**	26.5 93 570 **2EL/44.8**	45	800	
	40	2.72 9 108 **2EL/37.7**	3.72 12 470 **2EL/37.7**	4.78 17 140 **2EL/40.4**	6.3 22 720 **2EL/40.4**	8.9 32 040 **2EL/40.4**	12.6 45 170 **2EL/40.4**	17.7 63 690 **2EL/40.4**	22.1 79 140 **2EL/40.4**	25 89 800 **2EL/40.4**	25 89 800 **2EL/40.4**	40	710	
	35.5	2.34 8 347 **2EL/35.6**	2.34 8 347 **2EL/35.6**	5.2 17 050 **2EL/32.9**	7.1 23 340 **2EL/32.9**	9.7 31 950 **2EL/32.9**	13.7 45 050 **2EL/32.9**	19.3 63 520 **2EL/32.9**	23.9 78 720 **2EL/32.9**	28 92 250 **2EL/32.9**	34.7 114 350 **2EL/32.9**	35.5	630	
	31.5	2.5 9 159 **2EL/32.6**	3.42 12 540 **2EL/32.6**	5.1 18 180 **2EL/31.9**	5.1 18 180 **2EL/31.9**	7.1 25 630 **2EL/31.9**	10.1 36 130 **2EL/31.9**	14.2 50 950 **2EL/31.9**	20 71 840 **2EL/31.9**	20 71 840 **2EL/31.9**	–	31.5	560	

❗ The highlighted values of P_{N2} are applicable only for L_h= 10 000 h; ignore them in the other cases.

3.3 - In line gear reducer selection tables

$n_{N2} \cdot L_h$ rpm · h	i_N	Gear reducer size Nominal output power P_{N2} hp Nominal output torque T_{N2} lb in **Train of gears / ratio** . . . **/ i**										i_N	n_1	n_{N2}
		001A	**002A**	**003A**	**004A**	**006A**	**009A**	**012A**	**015A**	**018A**	**021A**		rpm	
28 000	250	0.6 13 200 **4EL/249**	0.83 18 280 **4EL/249**	1.13 25 040 **4EL/250**	1.64 36 370 **4EL/250**	2.24 49 790 **4EL/250**	3.2 72 510 **4EL/255**	4.44 100 400 **4EL/255**	5.4 121 250 **4EL/255**	6.8 154 500 **4EL/255**	8.1 182 850 **4EL/255**	250	710	**2.8**
	224	0.6 13 190 **3EL/219**	0.74 16 200 **3EL/219**	1.13 25 030 **3EL/221**	1.27 28 170 **3EL/221**	1.79 39 720 **3EL/221**	2.53 54 240 **3EL/214**	3.57 76 480 **3EL/214**	4.31 92 370 **3EL/214**	5.2 111 100 **3EL/214**	6.3 134 150 **3EL/214**	224	630	
	200	0.57 13 300 **4EL/207**	0.77 17 910 **4EL/207**	1.08 25 230 **4EL/207**	1.57 36 640 **4EL/207**	2.15 50 160 **4EL/207**	3.07 73 060 **4EL/211**	4.25 101 150 **4EL/211**	5.1 122 150 **4EL/211**	6.5 155 650 **4EL/211**	7.7 184 200 **4EL/211**	200	560	
	200	0.53 12 720 **3EL/212**	0.67 15 120 **3EL/201**	0.92 20 680 **3EL/200**	1.26 28 310 **3EL/200**	1.7 38 840 **3EL/203**	2.51 56 020 **3EL/198**	3.54 78 990 **3EL/198**	5 111 400 **3EL/198**	5 111 400 **3EL/198**	5.9 135 600 **3EL/204**	200	560	
	180	0.58 13 290 **3EL/183**	0.7 16 250 **3EL/183**	1.08 25 220 **3EL/185**	1.21 28 260 **3EL/185**	1.83 43 480 **3EL/189**	2.48 54 450 **3EL/174**	3.5 76 770 **3EL/174**	4.22 92 720 **3EL/174**	5.1 111 500 **3EL/174**	6.1 134 650 **3EL/174**	180	500	
	180	0.61 13 150 **4EL/171**	0.83 17 910 **4EL/171**	1.14 25 010 **4EL/175**	1.65 36 320 **4EL/175**	2.26 49 730 **4EL/175**	3.23 72 430 **4EL/178**	4.47 100 250 **4EL/178**	5.4 121 100 **4EL/178**	6.9 154 300 **4EL/178**	7.6 169 550 **4EL/178**	180	500	
	160	0.6 13 210 **3EL/158**	0.73 16 210 **3EL/158**	1.12 25 070 **3EL/160**	1.65 36 330 **3EL/157**	2.26 49 730 **3EL/157**	3.02 71 360 **3EL/169**	4 94 600 **3EL/169**	5.2 122 050 **3EL/169**	5.6 133 400 **3EL/169**	5.6 133 400 **3EL/169**	160	450	
	140	0.58 13 280 **3EL/146**	0.8 18 400 **3EL/146**	1.16 24 910 **3EL/136**	1.69 36 180 **3EL/136**	2.31 49 520 **3EL/136**	3.28 70 980 **3EL/137**	4.49 97 170 **3EL/137**	5.6 120 400 **3EL/137**	6.1 133 000 **3EL/137**	7.6 164 850 **3EL/137**	140	400	
	125	0.59 13 230 **3EL/126**	0.82 18 320 **3EL/126**	1.14 25 010 **3EL/124**	1.65 36 330 **3EL/124**	2.13 46 960 **3EL/124**	3.41 70 800 **3EL/117**	4.67 96 920 **3EL/117**	5.8 119 650 **3EL/117**	6.4 132 700 **3EL/117**	7.9 164 450 **3EL/117**	125	355	
	112	0.61 13 140 **3EL/107**	0.85 18 190 **3EL/107**	1.15 24 960 **3EL/109**	1.67 36 260 **3EL/109**	2.28 49 630 **3EL/109**	3.33 72 030 **3EL/108**	4.6 99 730 **3EL/108**	5.6 120 450 **3EL/108**	6.8 147 100 **3EL/108**	6.8 147 100 **3EL/108**	112	315	
	100	0.58 13 260 **3EL/101**	0.81 18 360 **3EL/101**	1.07 25 260 **3EL/105**	1.56 36 690 **3EL/105**	1.71 40 150 **3EL/105**	2.46 54 540 **3EL/98.6**	3.47 76 900 **3EL/98.6**	4.19 92 870 **3EL/98.6**	5 111 700 **3EL/98.6**	6.1 134 850 **3EL/98.6**	100	280	
	90	0.59 13 220 **3EL/88.7**	0.8 17 910 **3EL/88.7**	1.09 25 210 **3EL/92**	1.58 36 610 **3EL/92**	2.16 50 110 **3EL/92**	3.13 72 810 **3EL/92.2**	4.34 100 800 **3EL/92.2**	5.2 121 750 **3EL/92.2**	6.7 155 100 **3EL/92.2**	7.1 165 600 **3EL/92.2**	90	250	
	80	0.51 10 950 **3EL/76**	0.7 14 990 **3EL/76**	1.16 24 910 **3EL/76.2**	1.69 36 180 **3EL/76.2**	2.31 49 530 **3EL/76.2**	3.25 71 030 **3EL/77.7**	4.45 97 230 **3EL/77.7**	5.5 120 600 **3EL/77.7**	7 153 700 **3EL/77.7**	7.5 164 950 **3EL/77.7**	80	224	
	71	0.59 13 220 **3EL/70.8**	0.8 17 910 **3EL/70.8**	1.1 25 150 **3EL/72.5**	1.6 36 530 **3EL/72.5**	2.19 50 000 **3EL/72.5**	3.17 72 650 **3EL/72.7**	4.39 100 600 **3EL/72.7**	5.3 121 450 **3EL/72.7**	6.8 154 800 **3EL/72.7**	8 183 150 **3EL/72.7**	71	200	
	63	0.499 11 000 **3EL/63**	0.68 15 060 **3EL/63**	1.16 24 900 **3EL/61.1**	1.69 36 160 **3EL/61.1**	2.31 49 510 **3EL/61.1**	3.35 71 930 **3EL/61.3**	4.64 99 580 **3EL/61.3**	5.6 120 250 **3EL/61.3**	7.1 153 250 **3EL/61.3**	8.5 181 350 **3EL/61.3**	63	180	
	56	0.56 13 330 **3EL/59.9**	0.76 17 910 **3EL/59.9**	–	–	–	–	–	–	–	–	56	160	
	50	0.59 13 220 **3EL/49.7**	0.8 17 910 **3EL/49.7**	1.1 25 140 **3EL/50.6**	1.6 36 510 **3EL/50.6**	2.19 49 990 **3EL/50.6**	3.13 72 810 **3EL/51.6**	4.34 100 800 **3EL/51.6**	5.2 121 750 **3EL/51.6**	6.7 155 100 **3EL/51.6**	7.3 169 950 **3EL/51.6**	50	140	
	50	0.34 8 128 **2EL/53.1**	0.48 11 460 **2EL/53.1**	–	–	–	–	–	–	–	–	50	140	
	45	0.485 11 060 **2EL/45.2**	0.51 11 690 **2EL/45.2**	0.68 16 160 **2EL/47.5**	0.95 22 790 **2EL/47.5**	1.34 32 130 **2EL/47.5**	1.89 45 310 **2EL/47.5**	2.67 63 880 **2EL/47.5**	3.42 77 290 **2EL/44.8**	3.76 90 080 **2EL/47.5**	4.82 108 950 **2EL/44.8**	45	125	
	40	0.52 10 940 **2EL/37.7**	0.71 14 980 **2EL/37.7**	0.91 20 720 **2EL/40.4**	1.12 25 450 **2EL/40.4**	1.58 35 880 **2EL/40.4**	2.22 50 590 **2EL/40.4**	3.14 71 330 **2EL/40.4**	4.1 93 220 **2EL/40.4**	4.42 100 600 **2EL/40.4**	4.42 100 600 **2EL/40.4**	40	112	
22 400	3550	8 433 **4EL/3868**	11 890 **4EL/3868**	16 480 **4EL/3460**	23 240 **4EL/3460**	32 770 **4EL/3460**	–	–	–	–	–			
	3150	11 480 **4EL/3296**	11 870 **4EL/3296**	–	–	–	46 260 **4EL/3094**	65 230 **4EL/3094**	–	91 980 **4EL/3094**	–			
	2800	11 380 **4EL/2750**	15 580 **4EL/2750**	21 550 **4EL/2947**	25 850 **4EL/2947**	36 450 **4EL/2947**	–	–	80 360 **4EL/2921**	–	–			
	2500	11 330 **4EL/2377**	15 510 **4EL/2377**	21 340 **4EL/2459**	29 110 **4EL/2399**	39 840 **4EL/2399**	51 420 **4EL/2636**	72 500 **4EL/2636**	97 040 **4EL/2636**	102 250 **4EL/2636**	111 800 **4EL/2377**			
	2240	12 830 **4EL/2168**	12 830 **4EL/2168**	20 670 **4EL/2324**	–	–	56 190 **4EL/2145**	79 230 **4EL/2145**	95 690 **4EL/2145**	115 050 **4EL/2145**	138 950 **4EL/2145**			

OVERLOAD TORQUE CONTROL

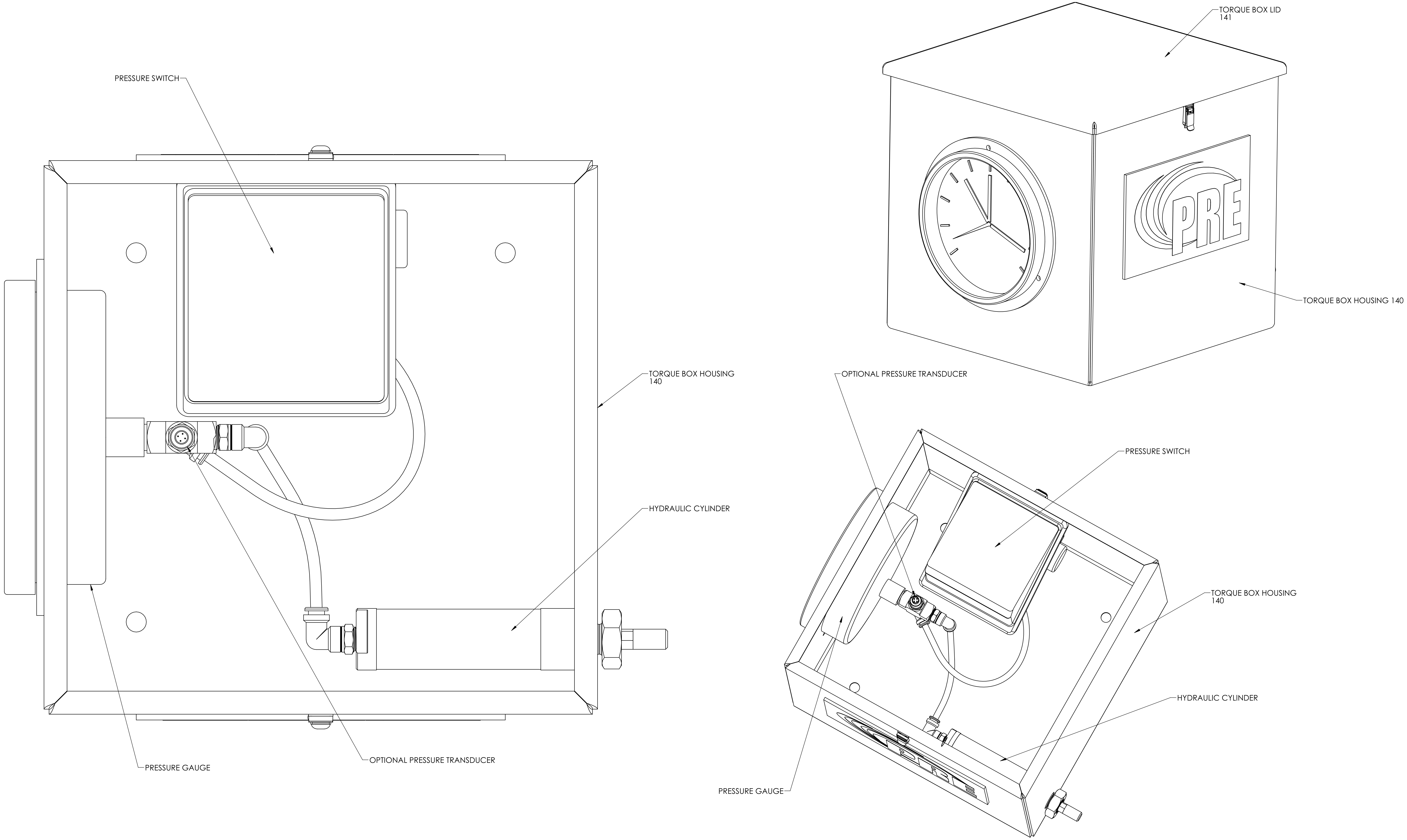

REV.	DESCRIPTION	DRAWN	APPROV.	DATE
0	INITIAL RELEASE	TLK	MDH	02/18

9547 SOUTH 500 WEST
SANDY, UT 84070
OFFICE: (801) 949-2083

PROPRIETARY AND CONFIDENTIAL

THE INFORMATION CONTAINED IN THIS DRAWING IS THE SOLE PROPERTY OF PRECISION ROTATING EQUIPMENT. ANY REPRODUCTION IN PART OR AS A WHOLE WITHOUT THE WRITTEN PERMISSION OF PRECISION ROTATING EQUIPMENT IS PROHIBITED.

UNLESS OTHERWISE SPECIFIED:
DIMENSIONS ARE IN INCHES
WEIGHTS ARE IN LBS

X.	+/- 0.1
X.X	+/- 0.06
X.XX	+/- 0.015
X.XXX	+/- 0.005
ANGLE	+/- 0.1 DEGREE

MACHINE FINISH (MAX) 125

MATERIAL: 304 STAINLESS STEEL

WEIGHT EACH: N/A

QUANTITY / ASSEMBLY: 1

TOTAL WEIGHT: N/A

	NAME	DATE
DRAWN	TLK	02/18
CHECKED	MDH	02/18
ENG APPR.	MDH	02/18
FAB INSP.		

DO NOT SCALE DRAWING

MODEL NUMBER:

DESIGNATION:

2 SW TORQUE BOX

TITLE: TORQUE BOX ASSEMBLY

SIZE: D
DWG. / PART NO.: 1020-2SW
REV: 0

SCALE: 1:3
SHEET 1 OF 1

PRESSURE, VACUUM, DIFFERENTIAL PRESSURE AND TEMPERATURE SWITCHES

FEATURES

- 1, 2 & 3 switch outputs
- Epoxy-coated enclosure designed to meet enclosure type 4X
- Wide variety of pressure sensors and materials
- Setting via reference dial or hex screw adjustment
- FM approved
- Adjustable Ranges:

  "WC ranges: 300 "wc vacuum to 250 "wc pressure (-746,7 to 622,3 mbar)

  Pressure: 30 "Hg Vac to 6000 psi (-1,0 to 413,7 bar)

  Differential pressure: 1"wcd to 200 psid (2.5 mbar to 13,8 bar)

  Temperature: -180 to 650 °F (-117.8 to 343.3 °C)

ISO 9001 CERTIFIED COMPANY

UNITED ELECTRIC CONTROLS

OVERVIEW

The 400 Series is a versatile family of vacuum, pressure, differential pressure and temperature switches for applications that require single or multiple switching capabilities. Dual and triple switch versions provide multi-output for alarm and shutdown, pre-alarm and alarm, high/low limit or level staging functions.

A wide variety of microswitch and process connection options, along with a weather-tight enclosure, make the 400 Series an ideal choice for most ordinary location applications. Its worldwide use is assured with approvals and certifications to agency standards.

Widely used throughout the process industries, the 400 Series provides threshold protection and control for many critical functions. Typical installations are found in industrial gas production, energy generation including pumps, turbines and compressors, pulp and paper, and water and wastewater treatment.

FEATURES

- UL listed and cUL certified. FM approved.
- CE compliant to low voltage directive and pressure equipment directive.
- Optional ATEX or GOST intrinsic safety compliance.
- One, two or three switch outputs may be separated up to 100% of range.
- Wide variety of available options and pressure sensor modules.
- Most models available for immediate delivery.

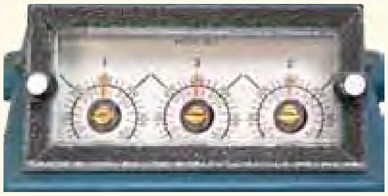

Reference scale, for types B, E & H with option M321

Enlarged View

Differential Pressure Model with M210 Option - Dial Indication

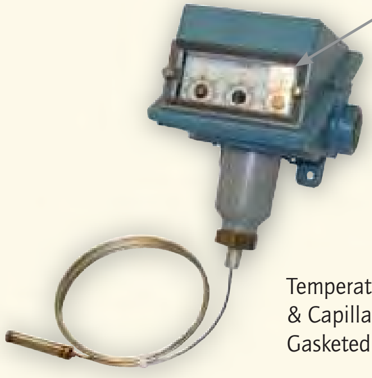

Temperature Model with Remote Bulb & Capillary and M321 option - Gasketed Lexan® Window

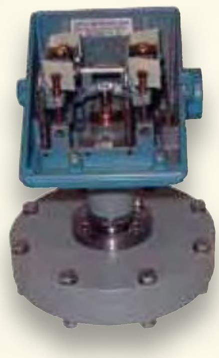

Dual Switch, Low Water Column Differential Pressure Model

Lexan® is a registered trademark of Sabic Innovative Plastics

SPECIFICATIONS

STORAGE TEMPERATURE	-65 to 160°F (-54 to 71°C)
AMBIENT TEMPERATURE LIMITS	-40 to 160°F (-40 to 71°C); set point typically shifts less than 1% of range for a 50°F (28°C) ambient temperature change
SET POINT REPEATABILITY	Temperature models: ± 2% of full scale range Pressure: models 126-376, 520-535, 540-547, 570-572, S126B-S164B: ± 2% of full scale range; models 440-457, 550-559: ± 1% of full scale range; models 610-614: ± 3% of full scale range
SHOCK	Set point repeats after 15 G, 10 millisecond duration
VIBRATION	Set point repeats after 2.5 G, 5-500 Hz
ENCLOSURE	Die cast aluminum, epoxy powder coated, gasketed, captive cover screws
ENCLOSURE CLASSIFICATION	Designed to meet enclosure type 4X requirements
SWITCH OUTPUT	One, two or three SPDT switches, may be separated up to 100% of range except models 521-524, 531-534: 50%; models 520, 525, 530, 535, 570-572: 30%; switches may be wired "normally open" or "normally closed"
ELECTRICAL RATING	15 A 125/250/480 VAC resistive. Electrical switches have limited DC capabilities. Consult factory for additional information.
WEIGHT	Approx. 3 to 7.5 lbs.; varies with model
ELECTRICAL CONNECTION	One 3/4" NPT and two 7/8" diameter knockouts
PRESSURE CONNECTION	All models 1/4" NPT (female) except models S126B-S164B, 520-535: 1/2" NPT (female); models 540-547: 1/8" NPT (female)
TEMPERATURE ASSEMBLY	'E' types use the same assemblies as 'F' types, however, range spans are limited due to use of reference dials Bulb and capillary: 6 feet 304 stainless steel Immersion stem: models 120 &121: nickel-plated brass; optional 316L stainless steel available
FILL	Temperature Models: Model 1BS: solvent filled; models 2-8: non-toxic oil filled
TEMPERATURE DEADBAND	Type F typically 1% and type E, B & C typically 2% of range under laboratory conditions (70°F ambient circulating bath at rate of 1/2°F per minute change)
DIFFERENTIAL PRESSURE INDICATOR (OPTION M210)	Differential pressure indication available J400K, J402K models 147-S157B; accuracy approximately 1-1/2% mid 50% of range, 3% at ends; window is plexiglass and gasketed; indicator may be field adjusted for approximately ±1% accuracy at any set point within range

APPROVALS

UNITED STATES AND CANADA
Type 400 & 402
UL Listed, cUL Certified
Pressure: UL 508; CSA C22.2 No. 14, file # E42272
Temperature: UL 873; CSA C22.2 No. 24, file # E10667

Type 403
UL Recognized, cUL Recognized
Pressure: UL 508; CSA C22.2 No. 14, file # E42272
Temperature: UL 873; CSA C22.2 No. 24, file # E10667

All Types
FM Approved
Pressure: Class 3510
Temperature: Class 3545

EUROPE
ATEX Directive (94/9/EC)
II 1 G EEx ia IIC T6 **(OPTIONAL – code M405)**
Tamb = -50°C to +60°C
UL International DEMKO A/S (N.B.# 0539)
Certificate # DEMKO 03 ATEX 0335063
EN 50014, 50020 & 50284

Low Voltage Directive (LVD) (73/23/EC & 93/68/EEC)
Compliant to LVD
Products rated lower than 50 VAC and 75 VDC are outside of the scope of the LVD

Pressure Equipment Directive (PED) (97/23/EC)
Compliant to PED
Products rated below 7.5 PSI are outside the scope of PED

RUSSIA
Gosgortechnadzor Permit **(OPTIONAL – code M406)**
0ExiaIICT6
Tamb = -50˚C to +60˚C
NANIO CCVE Certification Center
Certificate # ROSS US.GB05.Bo2933
GOST R 51330.0, 51330.1, 51330.10 & 51330.14

PRESSURE MODEL CHART

MODEL J403-358
TRIPLE SWITCH

Type J400, single switch output with internal hex screw adjustment
Type J402, dual switch output with internal hex screw adjustment
Type J403, triple switch output with internal hex screw adjustment

Model	Adjustable Set Point Range Low end of range on fall; High end of range on rise		Deadband Deadband doubles for 2 and 3 switch types		Over Range Pressure*		Proof Pressure**	
	"wc	mbar	"wc	mbar	psi	bar	psi	bar
Buna-N diaphragm and O-Ring with epoxy coated aluminum 1/2" NPT (female) pressure connection, large 0.72" orifice for clean-out purposes. Other wetted materials available, see pg. 12								
520†	300 Vac to 0	-746,7 to 0	0.2 to 12	0,5 to 29,9	200	13,8	400	27,6
521†	10 Vac to 10	-24,9 to 24,9	0.1 to 1	0,2 to 2,5	200	13,8	400	27,6
522†	50 Vac to 50	-124,5 to 124,5	0.1 to 5	0,2 to 12,4	200	13,8	400	27,6
523†	0.5 to 5.0	1,2 to 12,4	0.1 to 0.3	0,2 to 0,7	200	13,8	400	27,6
524†	2.5 to 50	6,2 to 124,5	0.1 to 2	0,2 to 5,0	200	13,8	400	27,6
525†	10 to 250	24,9 to 622,3	0.1 to 10	0,2 to 24,9	200	13,8	400	27,6
Welded 316L stainless steel diaphragm and 1/2" NPT (female) pressure connection, large 0.72" orifice for clean-out purposes								
530†	300 Vac to 0	-746,7 to 0	0.2 to 15	0,5 to 37,3	50	3,4	100	6,9
531†	10 Vac to 10	-24,9 to 24,9	0.1 to 1	0,2 to 2,5	50	3,4	100	6,9
532†	50 Vac to 50	-124,5 to 124,5	0.1 to 6	0,2 to 14,9	50	3,4	100	6,9
533†	0.5 to 5.0	1,2 to 12,4	0.1 to 0.3	0,2 to 0,7	50	3,4	100	6,9
534†	2.5 to 50	6,2 to 124,5	0.1 to 2.5	0,2 to 6,2	50	3,4	100	6,9
535†	10 to 250	24,9 to 622,3	0.1 to 10	0,2 to 24,9	50	3,4	100	6,9
	psi (unless noted)	bar (unless noted)	psi (unless noted)	bar (unless noted)	psi (unless noted)	bar (unless noted)	psi	bar
316L stainless steel diaphragm and Viton® O-Ring with 316L stainless steel 1/4" NPT (female) pressure connection								
570[1]	0 to 20	0 to 1,4	0.2 to 4	13,8 to 275,8 mbar	20	1,4	225	15,5
571[1]	0 to 50	0 to 3,4	0.7 to 6	48,3 to 413,7 mbar	50	3,4	225	15,5
572[1]	0 to 100	0 to 6,9	1 to 7	0,1 to 0,5	100	6,9	225	15,5
Welded 316L stainless steel bellows and 1/2" NPT (female) pressure connection								
S126B	30 "Hg Vac to 0	-1 to 0	0.2 to 0.9 "Hg	6,8 to 30,5 mbar	3	0,2	5	0,3
S134B	30 "Hg Vac to 20 psi	-1 to 1,4	0.2 to 1.2 "Hg	6,8 to 40,6 mbar	20	1,4	25	1,7
S137B	0 to 80 "wc	0 to 199,1 mbar	2 to 6 "wc	5 to 14,9 mbar	80 "wc	199,1 mbar	5	0,3
S144B	0 to 20	0 to 1,4	0.1 to 0.5	6,9 to 34,5 mbar	20	1,4	25	1,7
S146B	0 to 30	0 to 2,1	0.1 to 0.6	6,9 to 41,4 mbar	30	2,1	40	2,8
S156B	0 to 100	0 to 6,9	0.2 to 0.8	13,8 to 55,2 mbar	100	6,9	125	8,6
S164B	0 to 200	0 to 13,8	0.3 to 2	20,7 to 137,9 mbar	200	13,8	200	13,8
Welded 316L stainless steel bellows and 1/4" NPT (female) pressure connection								
358	0 to 200	0 to 13,8	1.5 to 8	0,1 to 0,6	200	13,8	250	17,2
361	0 to 300	0 to 20,7	2 to 9	0,1 to 0,6	300	20,7	350	24,1
376	0 to 500	0 to 34,5	3 to 12	0,2 to 0,8	500	34,5	575	39,6

*Over Range Pressure: The maximum pressure that may be applied continuously without causing damage and maintaining set point repeatability
**Proof pressure: The maximum pressure to which a pressure sensor may be subjected, which causes no permanent damage. The unit may require calibration (e.g. start-up, testing).
† Model not available on types J400 and J403; actual deadband shown, do not double – switch separation a maximum of 30 - 50% of range.
[1] Switch separation of 30% maximum for dual and triple switch units.

DIMENSIONAL DRAWINGS

Dimensional drawings for all models may be found at www.ueonline.com

Internal Hex Screw Set Point Adjustment

Types J400, J402, J403, J400K, J402K, C400, C402, C403, F400, F402, F403

Set Point Adjustment via Reference Dial

Types H400, H402, H403, H400K, H402K, B400, B402, B403, E400, E402, E403

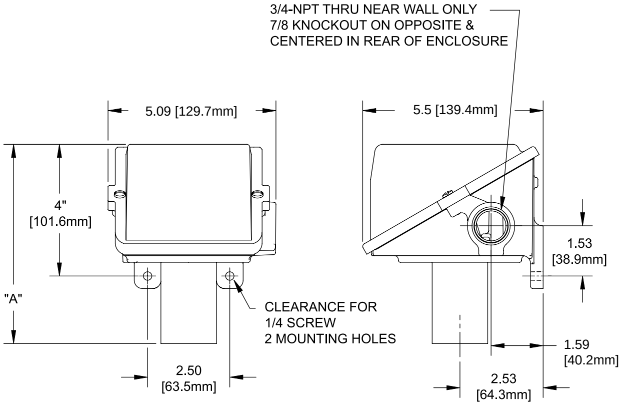

	Dimension A		
Models	**Inches**	**mm**	**NPT**
PRESSURE			
126-164	5.91	150.0	1/4
S126B-S164B	6.31	160.3	1/2
270-376	5.50	139.7	1/4
440-443, 449			
451, 453, 454	4.28	108.7	1/4
448, 450, 452	5.03	127.8	1/4
520-525	8.25	209.6	1/2
530-535	8.13	206.5	1/2
551, 553-555	4.56	115.8	1/4
550, 552	5.03	127.8	1/4
570-572	4.56	115.8	1/4
610-614	6.31	160.3	1/4
DIFFERENTIAL PRESSURE			
147-157	6.13	155.7	1/4
S147B-S157B	6.13	155.7	1/2
455-559	7.00	177.8	1/4
540-543	7.97	202.4	1/8
544-547	8.03	204.0	1/8
TEMPERATURE			
120, 121	7.38	187.3	Immersion Stem
1BS-8BS	6.72	170.7	Bulb & Capillary

Pressure Sensors *All dimensions stated in inches (millimeters)*

Models 126-164

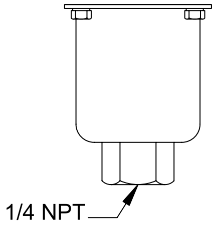

Models S126B-S164B

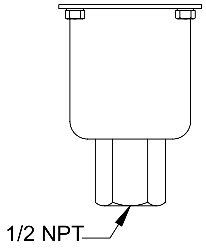

Models 270-376

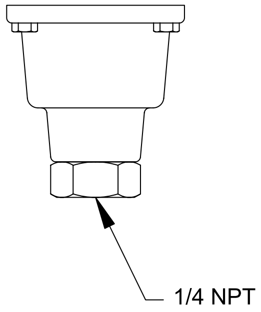

Models 440-454, 550-555, 570-572

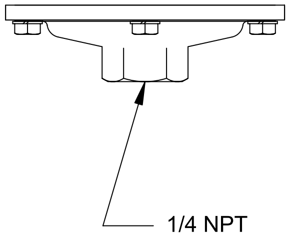

Models 610-614

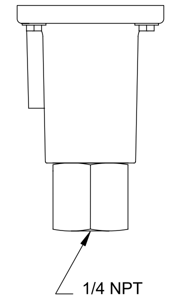

Models 520-525

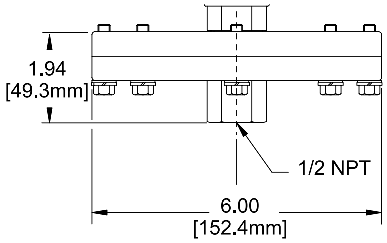

Models 530-535

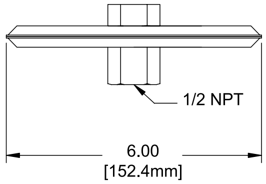

ACCESSORY EQUIPMENT

GRATING

19 SPACE LOAD TABLES

Bar Size, Inches	Ped Span, Inches	Wt.* Lbs. Sq. Ft.	Sec. Prop Sx*, in^3 Ix*, in^4		Clear Span											
					2'- 0"	2'- 6"	3'- 0"	3'- 6"	4'- 0"	4'- 6"	5'- 0"	5'- 6"	6'- 0"	6'- 6"	7'- 0"	8'- 0"
1 x 1/8	39	1.71	0.211	U	421	269	187	137								
				D	0.144	0.225	0.324	0.439								
			0.105	C	421	337	281	241								
				D	0.115	0.180	0.259	0.353								
1 x 3/16	44	2.46	0.316	U	632	404	281	206	158							
				D	0.144	0.225	0.324	0.441	0.576							
I-Bar		1.99	0.158	C	632	505	421	361	316							
				D	0.115	0.180	0.259	0.353	0.461							
1-1/4 x 1/8	47	2.08	0.329	U	658	421	292	215	164							
				D	0.115	0.180	0.259	0.353	0.459							
			0.206	C	658	526	439	376	329							
				D	0.092	0.144	0.208	0.282	0.369							
1-1/4 x 3/16	52	3.01	0.493	U	987	632	439	322	247	195						
				D	0.115	0.180	0.259	0.353	0.461	0.583						
I-Bar		2.34	0.308	C	987	789	658	564	493	439						
				D	0.092	0.144	0.207	0.282	0.368	0.467						
1-1/2 x 1/8	53	2.46	0.474	U	947	606	421	309	237	187						
				D	0.096	0.150	0.216	0.294	0.384	0.486						
			0.355	C	947	758	632	541	474	421						
				D	0.077	0.120	0.173	0.235	0.307	0.389						
1-1/2 x 3/16	59	3.56	0.711	U	1421	909	632	464	355	281	227					
				D	0.096	0.150	0.216	0.294	0.384	0.487	0.599					
I-Bar		2.70	0.533	C	1421	1137	947	812	711	632	568					
				D	0.077	0.120	0.173	0.235	0.307	0.389	0.480					
1-3/4 x 3/16	66	4.12	0.967	U	1934	1238	860	632	484	382	309	256	215			
				D	0.082	0.129	0.185	0.252	0.329	0.417	0.514	0.623	0.741			
I-Bar		3.06	0.846	C	1934	1547	1289	1105	967	860	774	703	645			
				D	0.066	0.103	0.148	0.202	0.263	0.333	0.412	0.498	0.593			
2 x 3/16	73	4.68	1.263	U	2526	1617	1123	825	632	499	404	334	281	239		
				D	0.072	0.113	0.162	0.221	0.288	0.364	0.450	0.544	0.649	0.760		
I-Bar		3.43	1.263	C	2526	2021	1684	1444	1263	1123	1011	919	842	777		
				D	0.058	0.090	0.130	0.176	0.230	0.292	0.360	0.436	0.518	0.608		
2-1/4 x 3/16	80	5.24	1.599	U	3197	2046	1421	1044	799	632	512	423	355	303	261	
				D	0.064	0.100	0.144	0.196	0.256	0.324	0.400	0.484	0.576	0.677	0.784	
I-Bar		3.75	1.798	C	3197	2558	2132	1827	1599	1421	1279	1163	1066	984	914	
				D	0.051	0.080	0.115	0.157	0.205	0.259	0.320	0.387	0.461	0.541	0.628	
2-1/2 x 3/16	87	5.79	1.974	U	3947	2526	1754	1289	987	780	632	522	439	374	322	247
				D	0.058	0.090	0.130	0.176	0.230	0.292	0.360	0.436	0.519	0.609	0.705	0.923
I-Bar		4.15	2.467	C	3947	3158	2632	2256	1974	1754	1579	1435	1316	1215	1128	987
				D	0.046	0.072	0.104	0.141	0.184	0.233	0.288	0.348	0.415	0.487	0.565	0.737

U - Safe uniform load in pounds/sq. ft.

C - Safe concentrated load in pounds/ft. grating width

D - Deflection in inches

Loads and deflections given in this table are theoretical, and are based on a unit stress of 12,000 psi.

*Based on 10.105 bars/ft. of grating width. Bearing bars 1-3/16" c.c. Add .3 lbs./sq. ft. for 19-SG-2. **Note:** Grating for spans to the left of the heavy line have a deflection less than 1/4" for uniform loads of 100 lbs./sq. ft. This is the maximum deflection to afford pedestrian comfort and can be exceeded for other types of load at the discretion of the engineer. The actual Ped (pedestrian) Span under this condition is shown above for each size of grating. When serrated grating is specified, the depth of grating required for a specific load will be 1/4" greater than that shown in these tables.

Panel Width Chart (in.) **- 19-SG-4, 19-SG-2, 19-SGLi-4, 19-SGLi-2, 19-SGF-4, 19-SGF-2, 19-ADT-4 & 19-ADT-2**

Dimensions Are Out-to-Out of Bearing Bars**

No. of Bars	2	3	4	5	6	7	8	9	10	11	12	13	14	15	16
3/16" Bars	1-3/8	2-9/16	3-3/4	4-15/16	6-1/8	7-5/16	8-1/2	9-11/16	10-7/8	12-1/16	13-1/4	14-7/16	15-5/8	16-13/16	18
No. of Bars	17	18	19	20	21	22	23	24	25	26	27	28	29	30	31
3/16" Bars	19-3/16	20-3/8	21-9/16	22-3/4	23-15/16	25-1/8	26-5/16	27-1/2	28-11/16	29-7/8	31-1/16	32-1/4	33-7/16	34-5/8	35-13/16

**Add 1/4" for extended cross bars. Deduct 1/16" for 1/8˝" bearing bars. Standard panel widths indicated in teal.

Panel Width Chart (in.) **- 19-SGI-4 & 19-SGI-2** Dimensions Are Out-to-Out of Bearing Bars**

No. of Bars	2	3	4	5	6	7	8	9	10	11	12	13	14	15	16
1/4" Flange	1-7/16	2-5/8	3-13/16	5	6-3/16	7-3/8	8-9/16	9-3/4	10-15/16	12-1/8	13-5/16	14-1/2	15-11/16	16-7/8	18-1/16
No. of Bars	17	18	19	20	21	22	23	24	25	26	27	28	29	30	31
1/4" Flange	19-1/4	20-7/16	21-5/8	22-13/16	24	25-3/16	26-3/8	27-9/16	28-3/4	29-15/16	31-1/8	32-5/16	33-1/2	34-11/16	35-7/8

**Bar thickness is 1/4" at top and bottom. Add 1/4" for extended cross bars. Standard panel widths indicated in teal.

1-1/4" 19SGI4 Aluminum I-Bar Grating Load Calcs

L	Maximum clear span of grating in inches			**36.000**	3.00
U	Uniform Load in pounds per square foot			439	
Du	Deflection under Uniform Load in inches			0.2592	
	Uniform Load @ 0.25" deflection			423	
	Deflection in inches @	L/	**240**	0.1500	
	Uniform Load @ above "L / " deflection			254	

C	Concentrated Load in pounds per foot of width			658	
Dc	Deflection under Concentrated Load			0.2074	
	Concentrated Load @ 0.25" deflection			793	
	Deflection in inches @	L/	**240**	0.1500	
	Concentrated Load @ above "L / " deflection			476	

U	Specified Uniform Load in pounds per square foot	**180**	
Du	Deflection under Uniform Load in inches	0.1064	= L / 338
	Maximum clear span @ 0.25" deflection		

C	Specified Concentrated Load in pounds per foot of width	**300**	
Dc	Deflection under Concentrated Load	0.0946	= L / 381
	Maximum clear span @ 0.25" deflection	49.7797	

E	Modulus of elasticity, pounds per square inch (psi)	10000000
F	Maximum allowable fiber unit stress, (psi)	12000
Mw	Maximum bending moment of grating per foot of width	5921.0526
K	Number of bearing bars per foot of grating width	10.1053
Sb	Section modulus of one bearing bar	0.0488
Sw	Section modulus of grating per foot of width	0.4934
Ib	Moment of Inertia of one bearing bar	0.0488
Iw	Moment of Inertia of grating per foot of width	0.4934

HANDRAIL

ClearStream Environmental, Inc
9547 South 500 West, Sandy, UT 84070
801.676.1890 Phone │ 801.676.1893 Fax

NOTE:
FIELD DRILLED HOLES:
#17 TEK-SCREW – 1/4"ø
1/8"ø RIVET – 1/8"ø

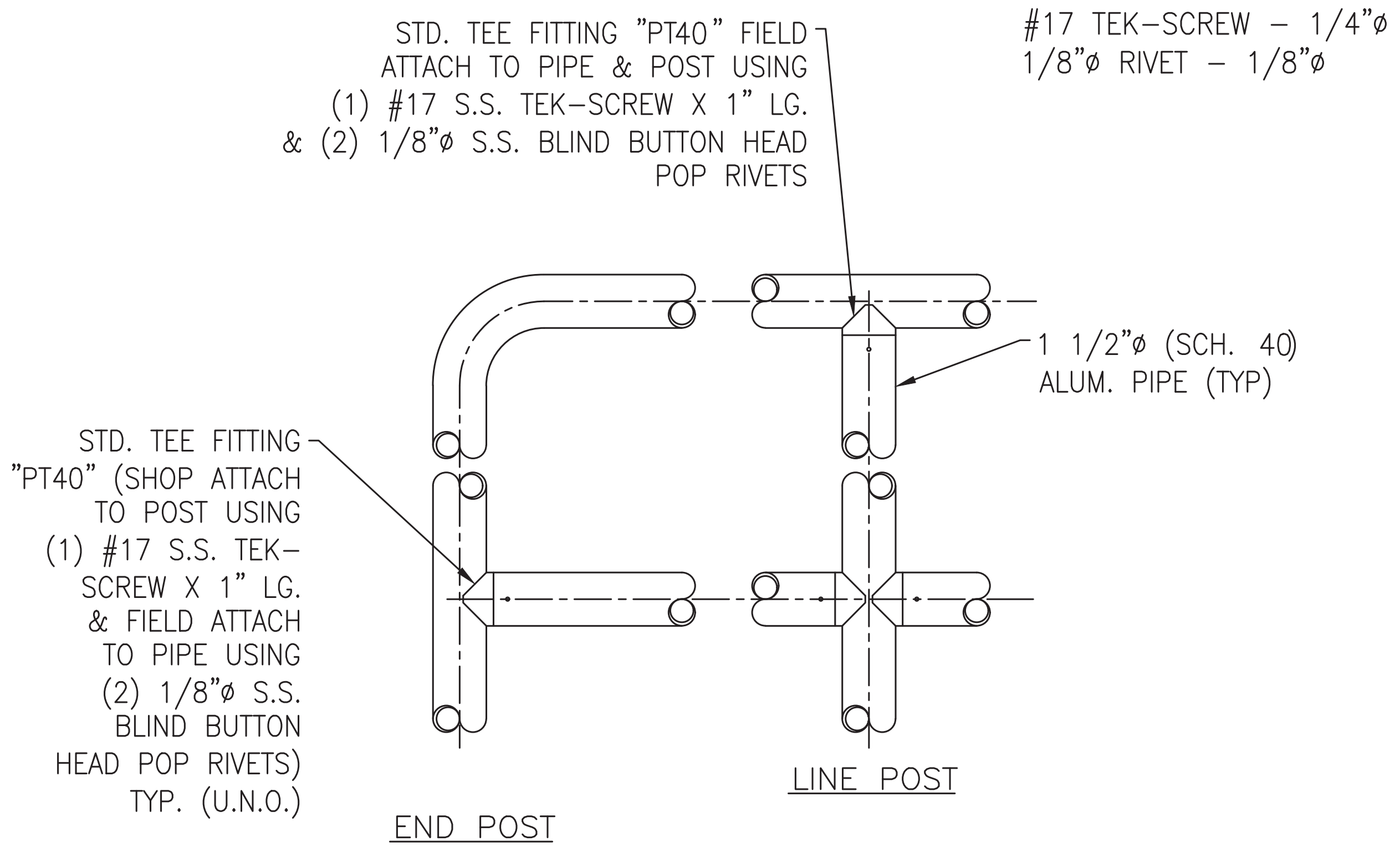

TYPICAL LEVEL RAIL CONNECTIONS

ERECTOR
NOTE:
NO EXPANSION JOINT IS REQ'D IN INTERMEDIATE RAIL. FIELD DRILL (2) 1/8"ø HOLES IN PIPE & FITTING TO MATCH FOR (2) 1/8"ø S.S. BLIND BUTTON HEAD POP RIVETS.

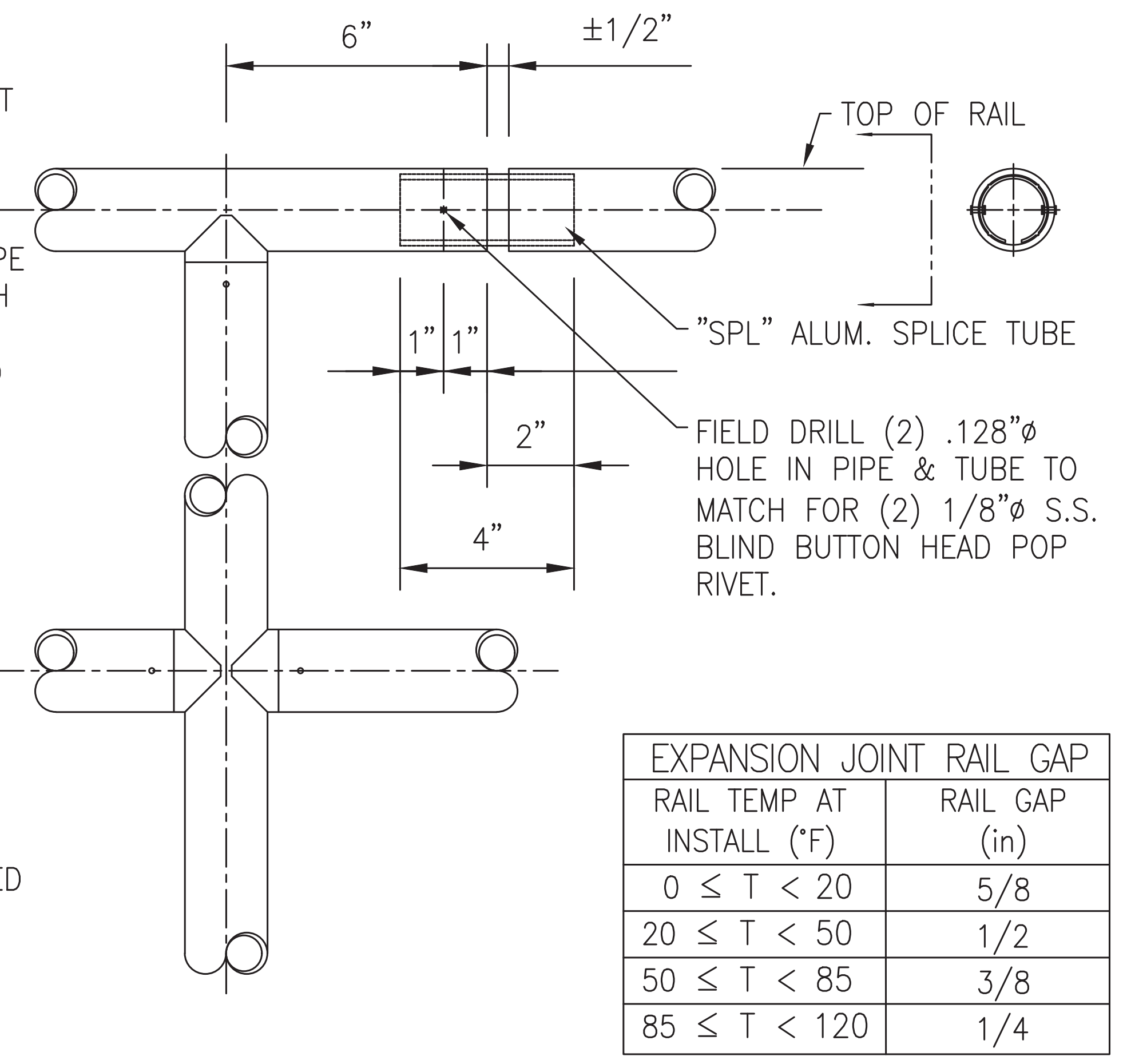

NOTE:
ANY BUILDING EXPANSION JOINTS NEED TO BE LOCATED AND MARKED ON P.T.P. SUBMITTAL DRAWINGS

EXPANSION JOINT RAIL GAP	
RAIL TEMP AT INSTALL (°F)	RAIL GAP (in)
0 ≤ T < 20	5/8
20 ≤ T < 50	1/2
50 ≤ T < 85	3/8
85 ≤ T < 120	1/4

TYPICAL EXPANSION JOINT
(LOCATED AT BUILDING EXPANSION JOINT & AT 24'-0" MAX. O/C)

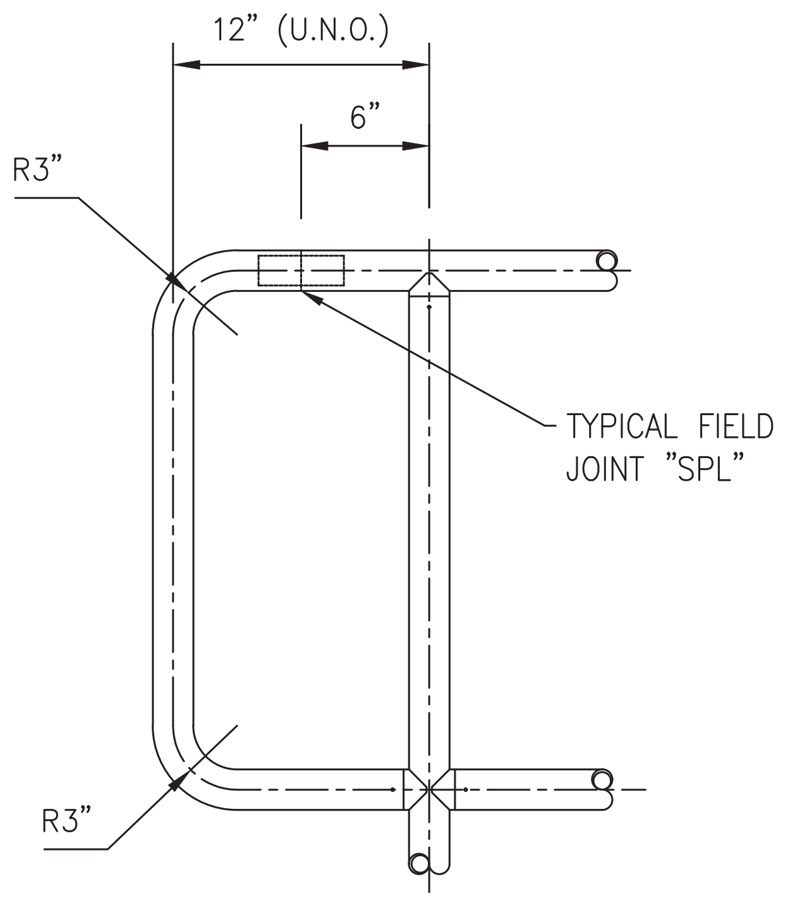

LEVEL P-END SUB-ASSEMBLE

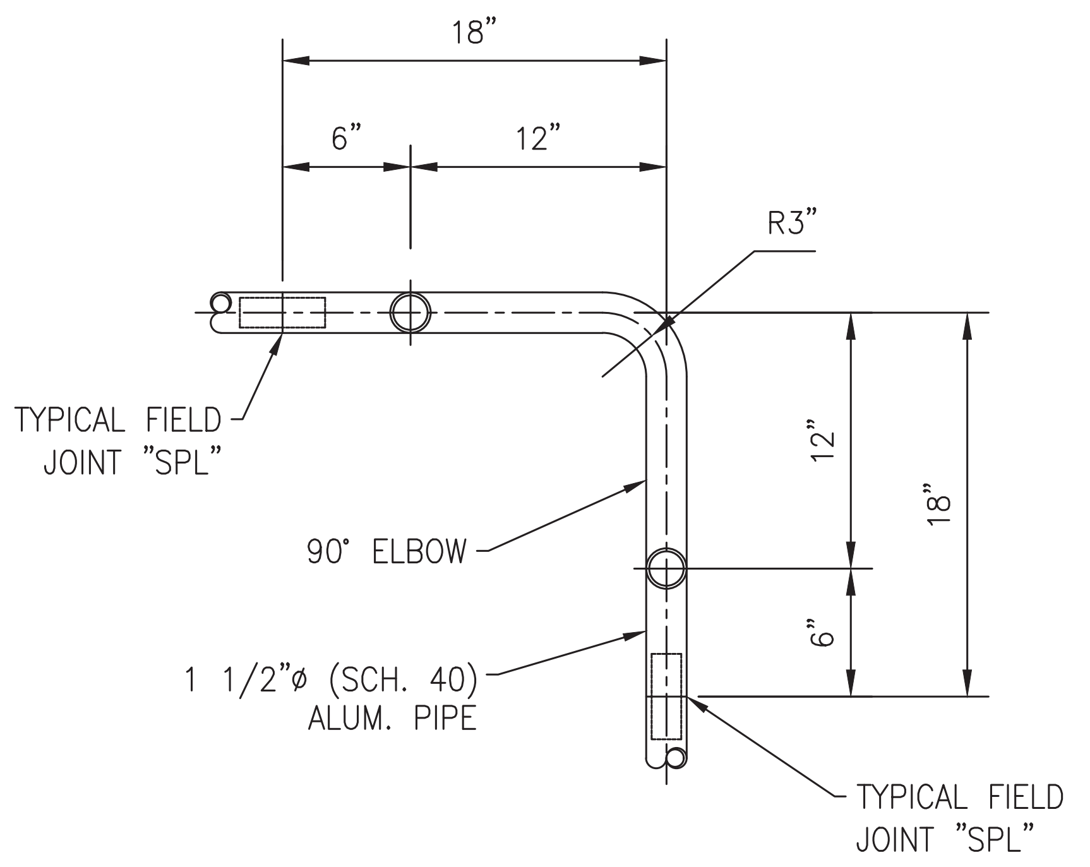

TYPICAL CORNER SUB-ASSEMBLE

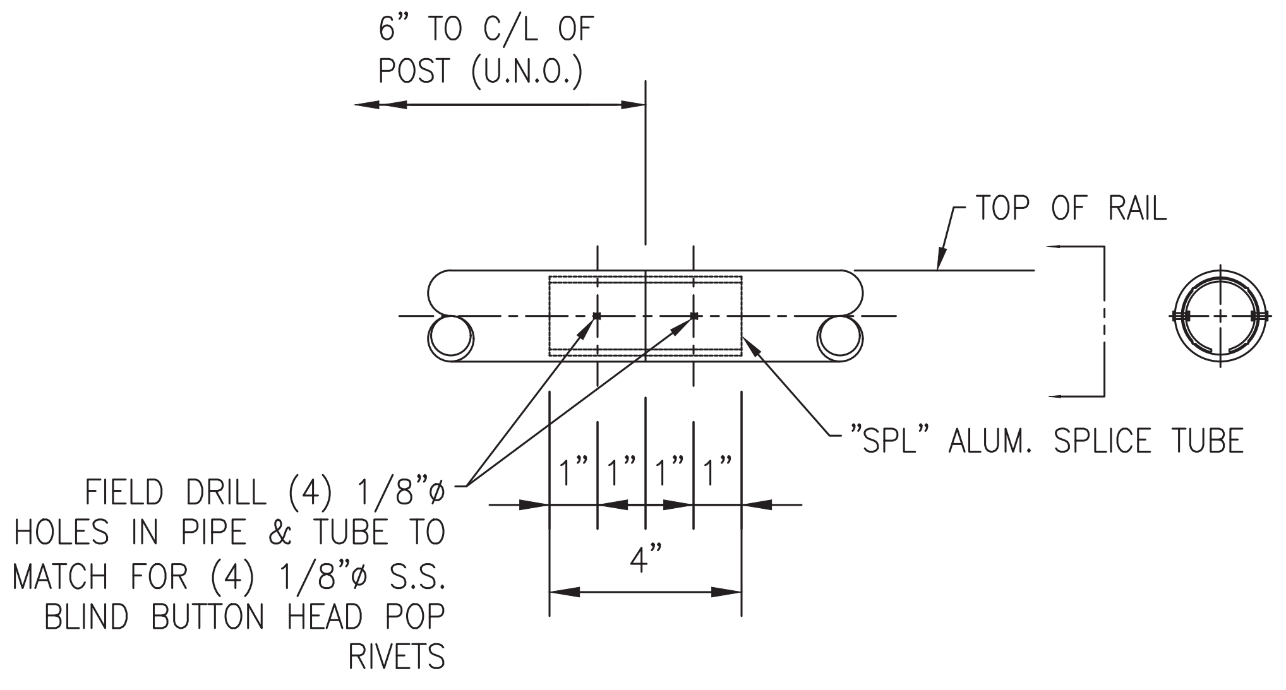

ERECTOR NOTE:
FIELD JOINT AT INTERMEDIATE RAIL IS LOCATED IN THE FITTING. FIELD DRILL (2) 1/8"ø HOLES IN PIPE AND FITTING TO MATCH FOR (2) 1/8"ø S.S. BLIND BUTTON HEAD POP RIVETS.

TYPICAL FIELD JOINT
(LOCATED AS NEEDED FOR STRUCTURAL STABILITY)

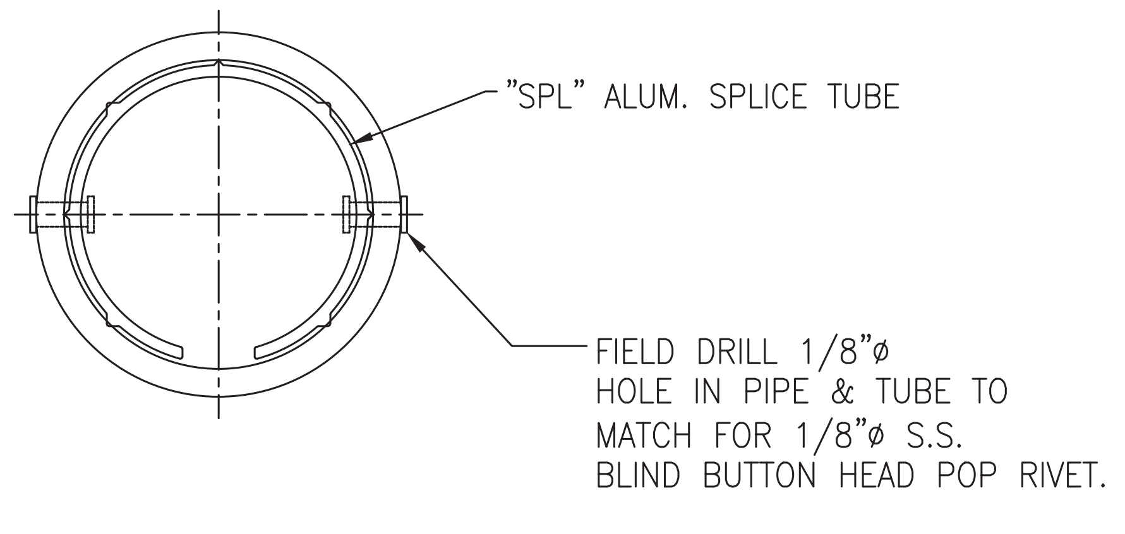

EXPANSION JOINT & FIELD SPLICE

MOUNTING CONDITIONS

MATERIAL	FASTENER TYPE	FASTENER DIAMETER	FASTENER LENGTH	MINIMUM EMBED DEPTH
STEEL	S.S. MACHINE BOLT	1/2"	2"	N/A
CONCRETE	N/A	–	–	–

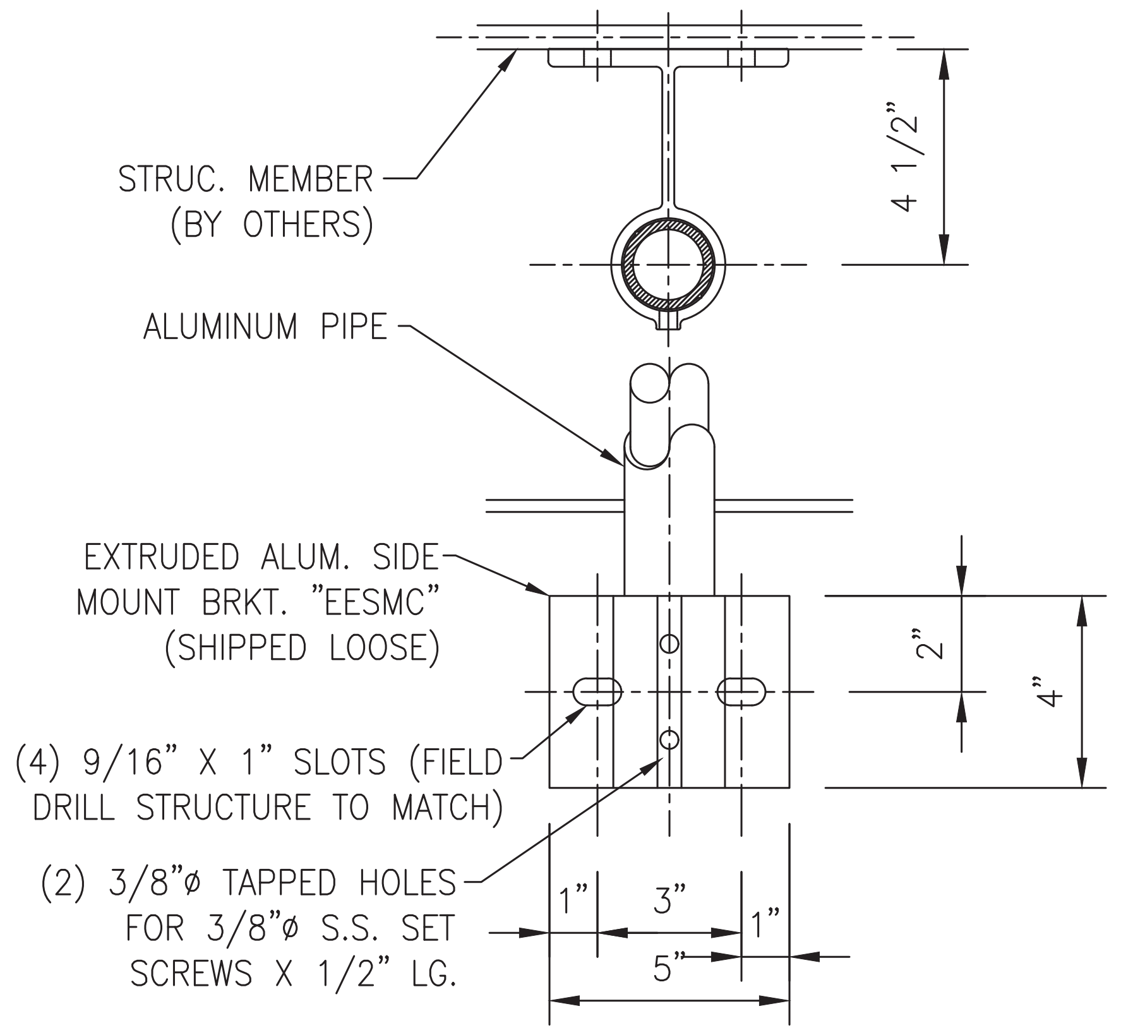

SIDE MOUNT 2-HOLE

EESMC

GENERAL NOTES

1. ALL RAIL IS TO BE OF MECHANICAL CONSTRUCTION U.N.O.
2. ALL RAILS ARE TO BE FABRICATED FROM 1 1/2"ø (SCH. 40) ALUMINUM PIPE (6005A–T61 ALLOY) (U.N.O.)
3. ALL POSTS ARE TO BE FABRICATED FROM 1 1/2"ø (SCH. 40) ALUMINUM PIPE (6005A–T61 ALLOY) (U.N.O.)
4. ALL EXTRUDED COMPONENTS ARE 6005A–T61 ALLOY, CAST COMPONENTS ARE 535 ALLOY
5. ALL FASTENERS (SELF TAPPING SCREWS, MACHINE BOLTS, ADHESIVE ANCHORS, ETC.) TO BE 316 STAINLESS STEEL
6. ALL RAILING SURFACES IN CONTACT WITH CONCRETE OR DISSIMILAR METALS SHALL RECEIVE ONE 1/16" THICK NEOPRENE GASKET (SHIPPED LOOSE FOR FIELD ATTACHMENT)
7. ALL BOLTS, NUTS AND FLAT WASHERS USED TO MOUNT RAILINGS TO FLOORS, WALLS, STEEL, ETC. ARE BY PTP ENGINEERED RAILINGS
8. ALL KICK PLATES ("FKP" OR "SKP) SHALL BE SHIPPED LOOSE IN 24'–0" LG. STOCK LENGTHS FOR FIELD CUTTING & DRILLING AS NEEDED
9. ALL POSTS ARE TO BE FURNISHED CUT TO LENGTH WITH FITTINGS & MOUNTING PLATES ATTACHED OR SHIPPED LOOSE PER THEIR SPECIFIC DETAILS
10. PIPE FOR STRAIGHT RAIL IS FURNISHED IN 24'–0" STOCK LENGTHS FOR CUTTING & DRILLING AS NEEDED
11. PIPE FOR CURVED RAIL IS FURNISHED SUB–ASSEMBLED IN 21'–0" (MAX). ROLLED LENGTHS FOR FIELD CUTTING & DRILLING AS NEEDED
** ALL RADII MUST BE VERIFIED PRIOR TO FABRICATION **
12. ALL CURVED RAIL SHALL BE FABRICATED USING CURVED TOP AND INTERMEDIATE RAILS
13. BENDS WITH A 3" C/L RADIUS ARE FURNISHED AS NEEDED & MUST BE FIELD CUT FOR FIELD CONDITIONS
14. ALL RAIL WHEN PROPERLY INSTALLED SHALL MEET OR EXCEED OSHA REQUIREMENTS.
15. MAX. POST SPACING TO BE 6'–0" C/C
16. ALL RAIL IS TO BE FINISHED IN ACCORDANCE WITH THE ALUMINUM ASSOCIATION'S DESIGNATION M10C22A41 OR M12C22A41
17. PIPE FOR CANTILEVER RAILING WILL SHIP LOOSE IN 24–0" STOCK LENGTHS FOR FIELD CUTTING AND DRILLING AS NEEDED
18. ENSURE ALL FIELD CUTS AND FIELD DRILLED HOLES ARE CLEANED UP, FREE OF SHARP EDGES AND BURRS.
17. ALL DIMENSIONS SHOWN THROUGHOUT THIS SET ARE APPROXIMATE AND SHALL BE FIELD VERIFIED BEFORE FABRICATION AND INSTALLATION

%% = SEE ERECTION DRAWINGS FOR PART NUMBER

RIVET SYSTEM SUB-ASSEMBLED

MOUNTING CONDITIONS

MATERIAL	FASTENER TYPE	FASTENER DIAMETER	FASTENER LENGTH	MINIMUM EMBED DEPTH
STEEL	S.S. MACHINE BOLT	1/2"	2"	N/A
CONCRETE	N/A	–	–	–

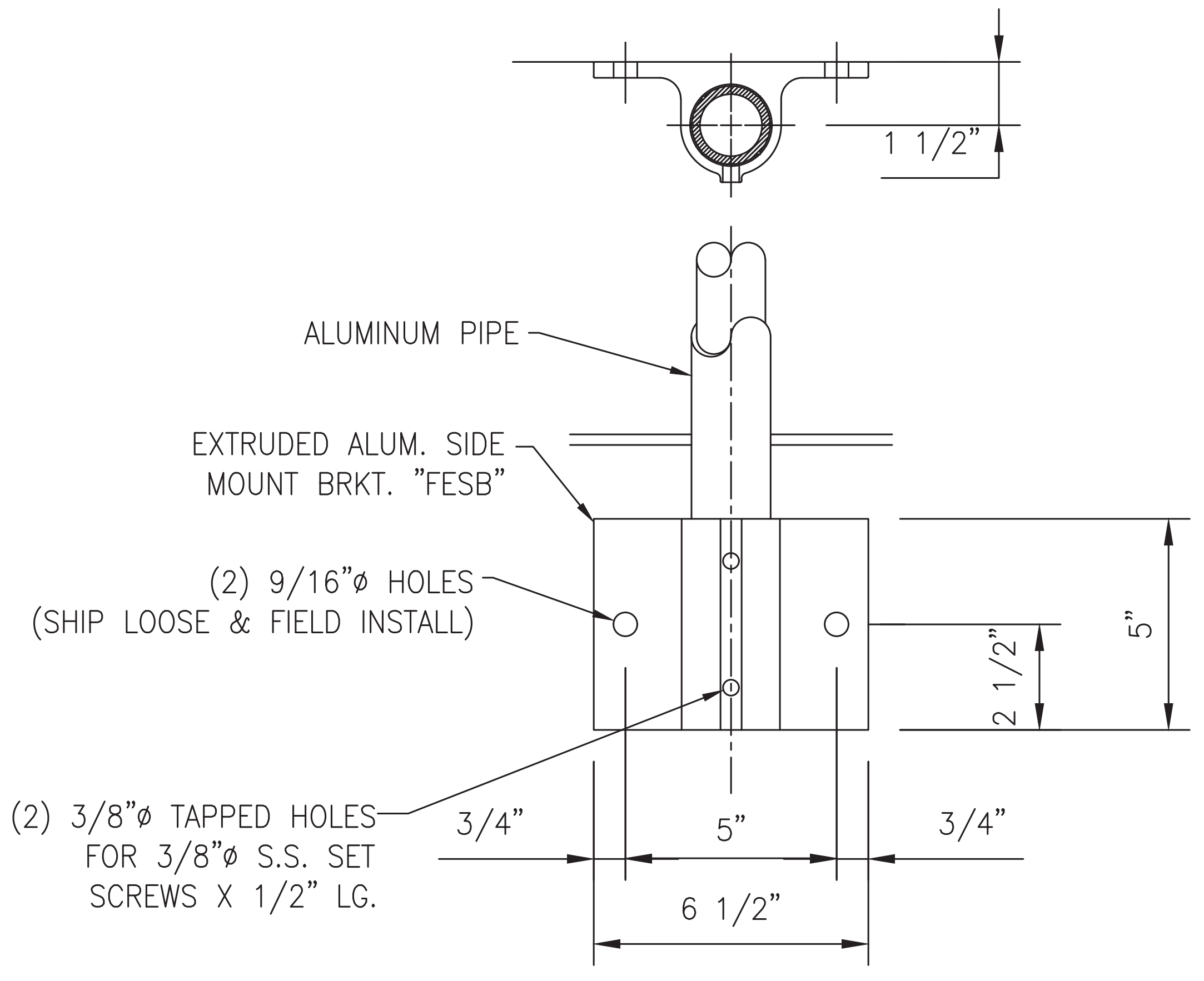

FLUSHED ENCLOSED SIDE

FESB

REV	DESCRIPTION	DATE
1	919-044B R&R	3/7/2019
1	919-044B SUBMITTAL	3/7/2019

PEAK TO PEAK
ENGINEERED RAILINGS
3000 YOUNGFIELD ST. SUITE 275 WHEAT RIDGE, CO 80215
Ph. (720)508-3819 FAX (720)409-3843

NOTICE TO CONTRACTOR AND ERECTOR:
BACK CHARGES FOR CORRECTIVE WORK OR REPLACEMENT MATERIALS WILL NOT BE ACCEPTED UNLESS AUTHORIZED BY PEAK TO PEAK ENGINEERED RAILINGS, INC. BEFORE SUCH COSTS ARE INCURRED

WALKWAY HANDRAIL
YOUNGSTOWN, OH
RIVET SYSTEM - SUB-ASSEMBLE

DESIGNER	CLEAR STREAM	CUSTOMER	CLEAR STREAM	DWG TITLE	STANDARD DETAILS		
CUSTOMER JOB #	18-001-C38	PRINT DATE	3/11/2019	ISSUE DATE	3/11/2019	CONTRACT NO	DRAWING NO.
DETAILED BY	JSS	CHECKER	JSS	SCALE	NTS	919-044	SD-1

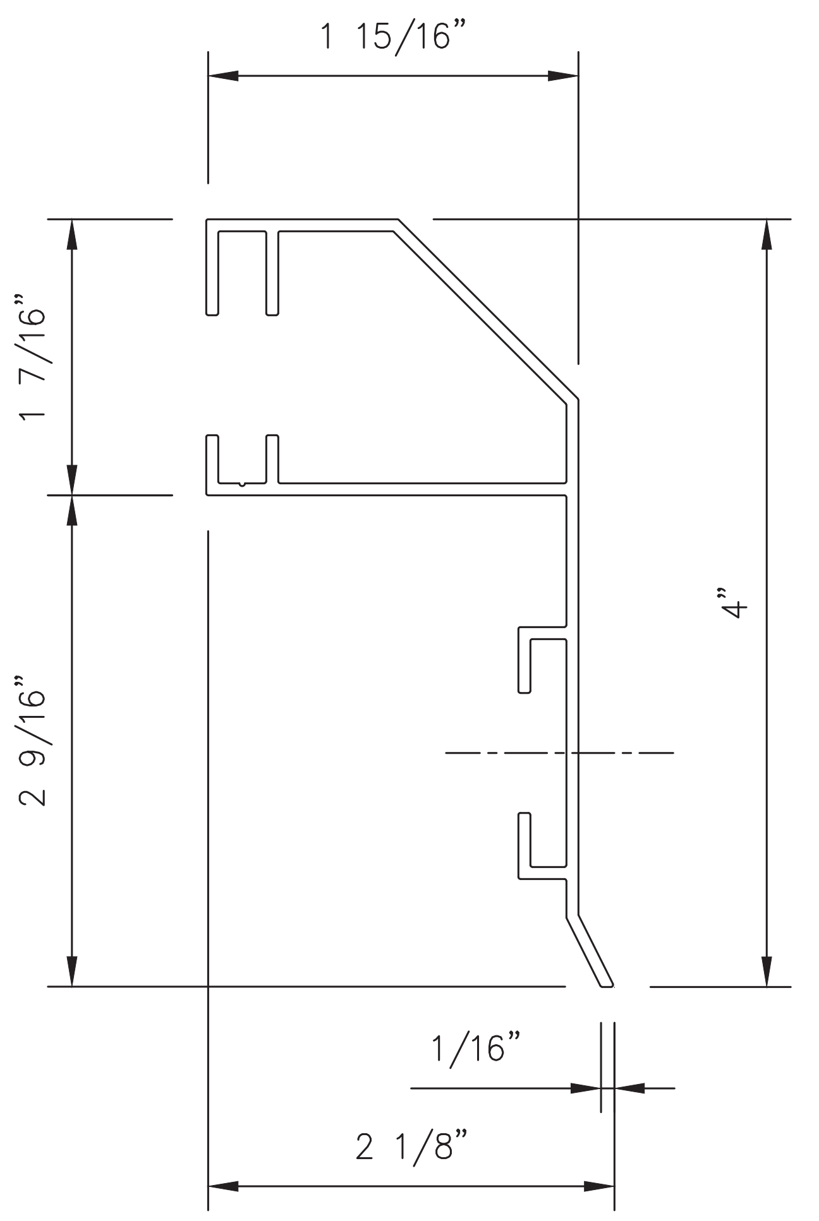

"FKP" KICK PLATE SECTION

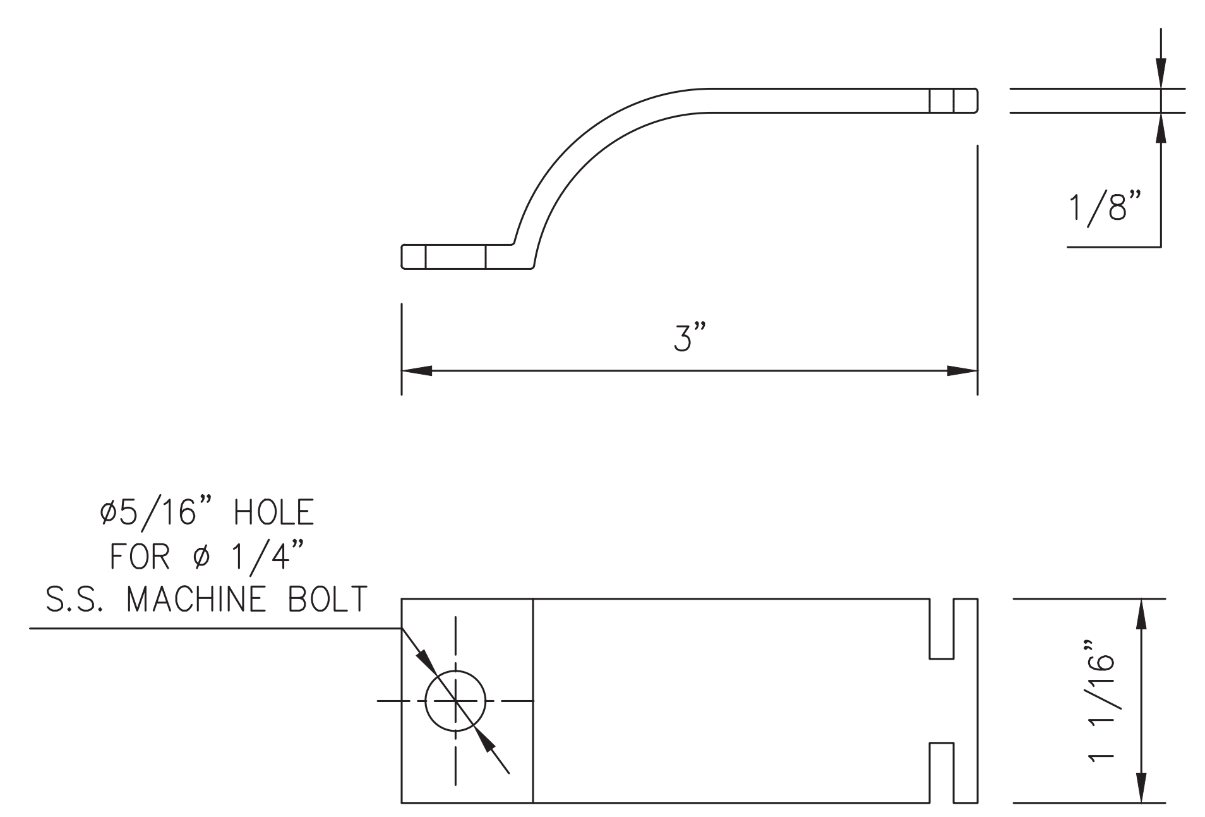

"KB" BRACKET

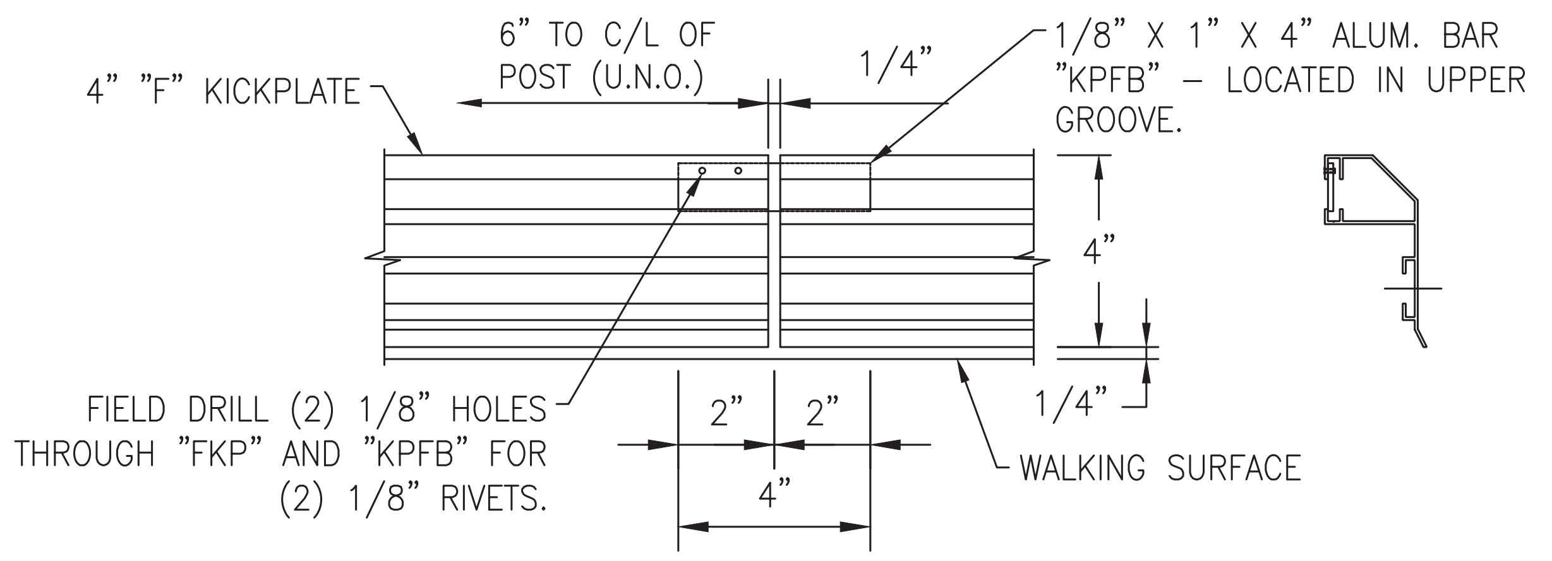

"FKP" PLATE EXPANSION JOINT

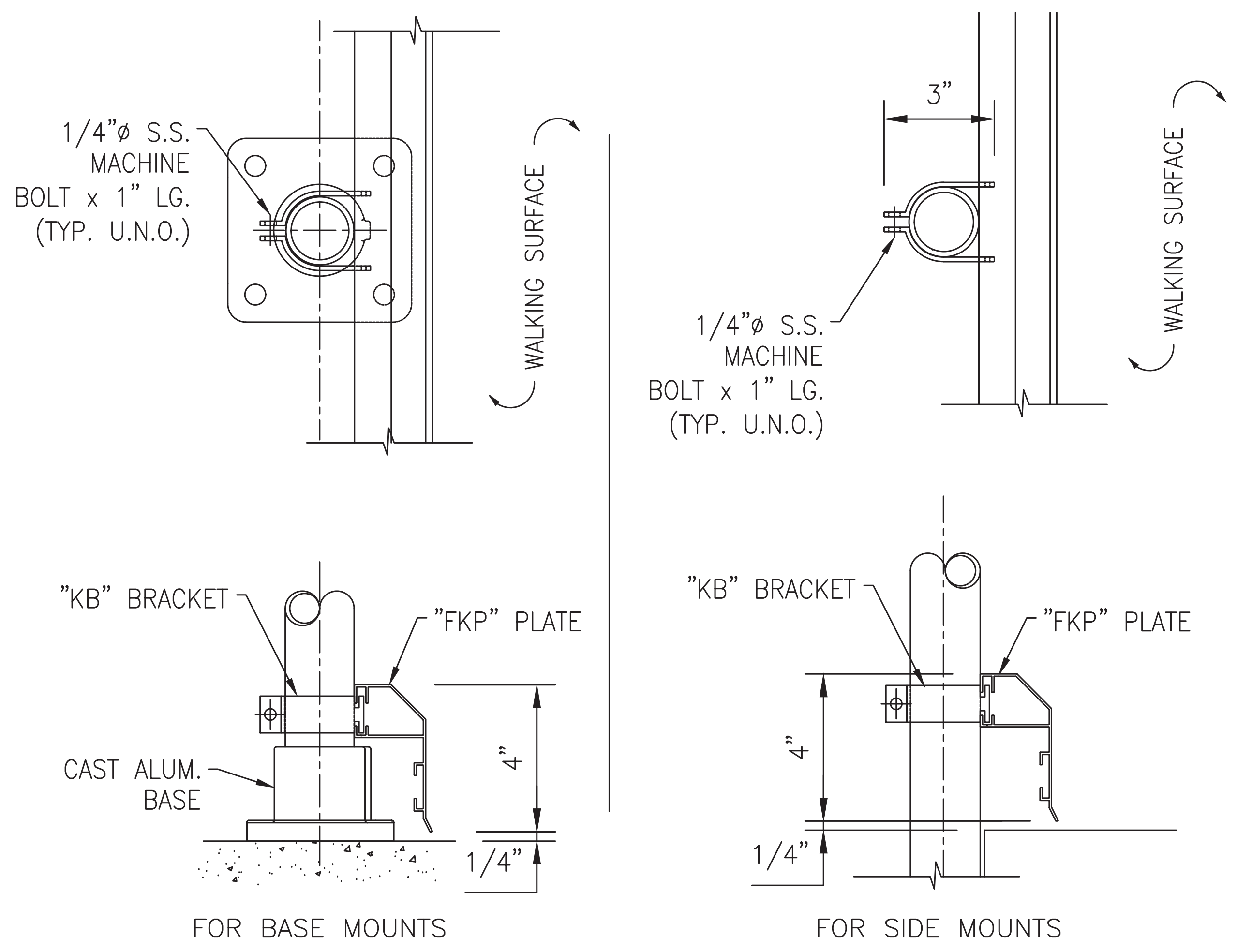

"FKP" INSTALLATION DETAIL

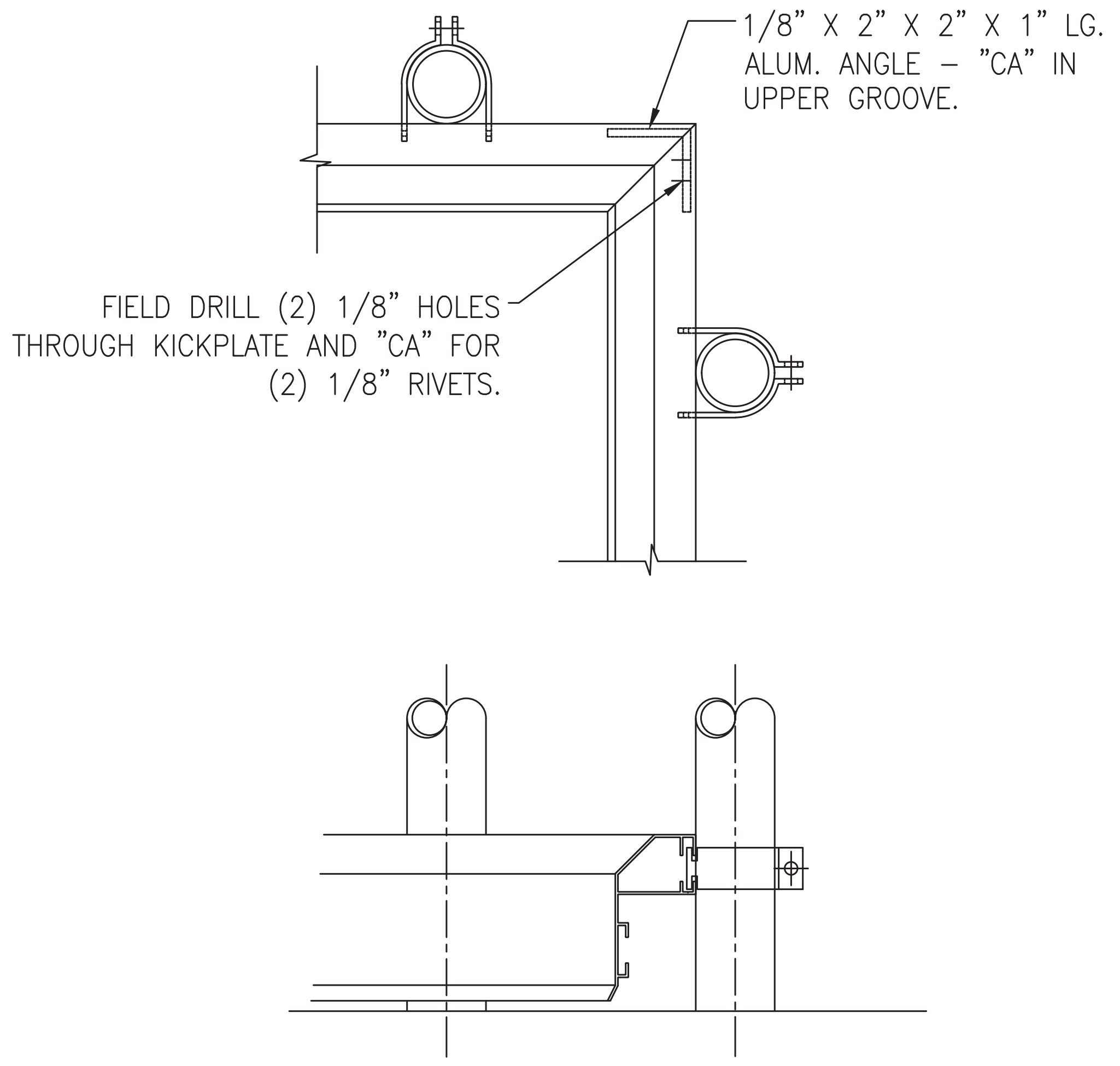

INSIDE 90 CORNER DETAIL

TYPICAL NOTES:

1.) ALL KICK PLATE SHALL BE:

- a) 4" EXTRUDED ALUMINUM "FKP" OR "SKP" PLATE.
- b) SHIPPED LOOSE IN 24'-0" STOCK LENGTHS FOR FIELD CUTTING AND DRILLING AS REQ'D.
- c) FIELD ATTACHED TO POSTS.

2.) ALL RIVETS ARE TO BE STAINLESS STEEL.

3.) INSTALL USING 1/4"ø S.S. BOLT (U.N.O.)

REV	DESCRIPTION	DATE
1	919-044A R&R	3/7/2019
1	919-044A SUBMITTAL	3/1/2019

PEAK TO PEAK
ENGINEERED RAILINGS
3000 YOUNGFIELD ST. SUITE 275 WHEAT RIDGE, CO 80215
Ph. (720)508-3819 FAX (720)409-3843

NOTICE TO CONTRACTOR AND ERECTOR:
BACK CHARGES FOR CORRECTIVE WORK OR REPLACEMENT MATERIALS WILL NOT BE ACCEPTED UNLESS AUTHORIZED BY PEAK TO PEAK ENGINEERED RAILINGS, INC. BEFORE SUCH COSTS ARE INCURRED

WALKWAY HANDRAIL
YOUNGSTOWN, OH
RIVET SYSTEM - SUB-ASSEMBLE

DESIGNER	CLEAR STREAM	CUSTOMER	CLEAR STREAM	DWG TITLE	KICKPLATE DETAILS		
CUSTOMER JOB #	18-001-C38	PRINT DATE	3/11/2019	ISSUE DATE	3/11/2019	CONTRACT NO 919-044	DRAWING NO. KP-1
DETAILED BY	JSS	CHECKER	JSS	SCALE	NTS		

Hydro

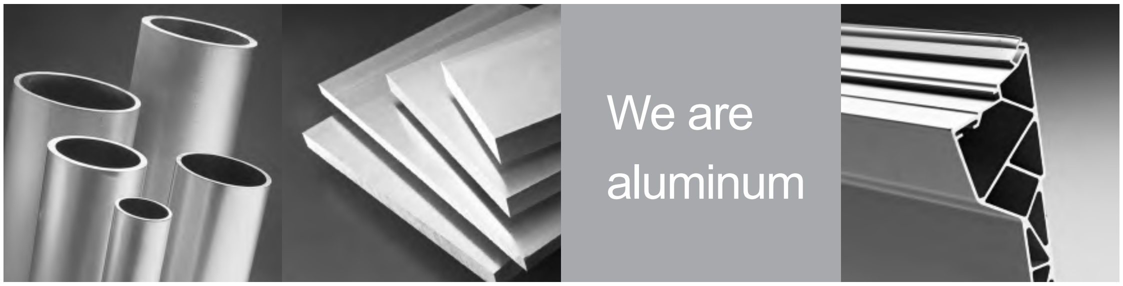

Alloy 6063

Alloy 6063, one of the most popular alloys in the 6000 series, provides good extrudability and a high quality surface finish. Hydro produces 6063 for use in standard architectural shapes, custom solid shapes and heatsinks, as well as seamless and structural tube and pipe. This alloy is often used for electrical applications in the -T5, -T52 and -T6 conditions due to its good electrical conductivity.

In the heat-treated condition, alloy 6063 provides good resistance to general corrosion, including resistance to stress corrosion cracking. It is easily welded or brazed by various commercial methods (caution: direct contact by dissimilar metals can cause galvanic corrosion). Since 6063 is a heat-treatable alloy, strength in its -T6 condition can be reduced in the weld region. Selection of an appropriate filler alloy will depend on the desired weld characteristics. Consult the Safety Data Sheet (SDS) for proper safety and handling precautions when using alloy 6063.

Alloy 6063 offers excellent response for anodizing in its -T5, -T52 , -T53 (“matte finish”), -T54, -T6 (“lusterous” finish) tempers The most common methods are clear, clear and color dying, and bright dipping and hard coat. Bright dipping provides an economical alternative to mechanical polished finishes while offering improved surface durability.

Since 6063 is the alloy of choice for aesthetic applications, special packaging may be required to protect critical exposed surfaces. Alloy 6063 is not typically ink-stenciled in order to preserve its surface finish quality. If stenciling and/or special packaging is required, it should be specified at the time of quotation.

Hydro offers alloy 6063 in a variety of standard tempers, as well as special tempers developed for unique applications.

Typical applications for 6063 alloy:

- Architectural and building products
- Railings and furniture
- Door and window frames
- Pipe and tube for irrigation systems
- Electrical components and conduit
- Heatsinks

6063 Temper Designations and Definitions

Standard Tempers	Standard Temper Definitions*
F	As fabricated. There is no special control over thermal conditions and there are no mechanical property limits.
O	Annealed. Applies to products that are annealed to obtain the lowest strength temper.
T1	Cooled from an elevated temperature shaping process and naturally aged. (See Note A.)
T4	Solution heat-treated and naturally aged. (See Note B.)
T5, T52, T53, T54, T55	Cooled from an elevated temperature shaping process and artificially aged. (See Note A.)
T6, T65	Solution heat-treated and artificially aged. (See Note B.)

Special Tempers	Special Temper Definitions**
T4S6	For 6063 extrusions requiring maximum formability in the naturally aged condition. This temper is intended for use when extrusions will be formed by the customer in the naturally aged condition and subsequently aged to -T6. May not meet -T4 minimum mechanical properties, but will meet -T6 minimum when properly aged. Test reports will state -T6 properties to demonstrate heat treat capabilities, but product will be supplied in the naturally aged condition. (See Note C.)
T6S5	For 6063 extrusions requiring good formability; meets standard 6063 -T6 minimum properties. (See Note B.)

* For further details of definitions, see Aluminum Association’s Aluminum Standards and Data manual and Tempers for Aluminum and Aluminum Alloy Products.

** Hydro Special Temper Designations are unregistered tempers for reference only, not recognized by the Aluminum Association, and are provided for customer use to identify unique processing, material or end use application characteristics.

Note A: Applies to products that are not cold worked after cooling from an elevated temperature shaping process, or in which the effect of cold work in flattening or straightening may not be recognized in mechanical properties.

Note B: Applies to products that are not cold worked after solution heat-treatment, or in which the effect of cold work in flattening or straightening may not be recognized in mechanical properties.

Note C: The specified temper will not conform to military, Federal, ASTM, ASME and AMS specifications.

Chemical Composition

Melting Temperature Range: 1140-1210 ºF Density: 0.097 lb./in.^{3}

Alloy	Si	Fe	Cu	Mn	Mg	Cr	Zn	Ti	Others	
									Each	Total
6063	0.20-0.6	0.35	0.10	0.10	0.45-0.9	0.10	0.10	0.10	0.05	0.15

Chemical composition in weight percent maximum unless shown as a range or minimum.

Aluminum = Remainder

Average Coefficient of Thermal Expansion (68º to 212ºF) = 13.0 x 10^{-6} (in./in.ºF)

Alloy 6063

6063 Extruded Mechanical and Physical Property Limits[1]

Standard Tempers	Wall Thickness[2] (min.)		Tensile Strength ksi (MPa)		Elongation[3] % (min.)	Typical Thermal Conductivity, @77°F, BTU-in./ft.²hr.°F (W/m-K@25ºC)	Typical Electrical Conductivity, @68ºF, % IACS
	inches	mm	Ultimate (min.)	Yield - 0.2% offset (min.)			
O	All	All	19.0 (130) max.	—	18	1510 (218)	58
T1	up thru .500	up thru 12.50	17.0 (115)	9.0 (60)	12	1340 (193)	50
	.501 - 1.000	>12.50 - 25.00	16.0 (110)	8.0 (55)	12	1340 (193)	50
T4	up thru .500	up thru 12.50	19.0 (130)	10.0 (70)	14	1340 (193)	50
	.501 - 1.000	>12.50 - 25.00	18.0 (125)	9.0 (60)	14	1340 (193)	50
T5	up thru .500	up thru 12.50	22.0 (150)	16.0 (110)	8	1450 (209)	55
	.501 - 1.000	>12.50 - 25.00	21.0 (145)	15.0 (105)	8	1450 (209)	55
T52	up thru 1.000	up thru 25.00	22.0-30.0 (150-205)	16.0-25.0 (110-170)	8	1450 (209)	55
T53	up thru .249	up thru 6.30	13.0-21.0 (90-145)	5-13 (30-90)	14	–	–
T54	up thru .124	up thru 3.20	33.0 (225)	30.0 (205)	8	–	–
	.125 - .499	>3.20 - 12.50	33.0 (225)	30.0 (205)	10	–	–
T55	up thru .124	up thru 3.20	28.0 (195)	23.0 (160)	8	–	–
	.125 - .249	>3.20 - 6.30	27.0 (185)	22.0 (150)	10	–	–
	.250 - .499	>6.30 - 12.50	26.0 (180)	21.0 (145)	12	–	–
T6	up thru .124	up thru 3.20	30.0 (205)	25.0 (170)	8	1390 (201)	53
	.125 - 1.000	>3.20 - 12.50	30.0 (205)	25.0 (170)	10	1390 (201)	53
T65	up thru 0.182	up thru 5.00	36.0 (250)	33.0 (225)	8	–	–
Hydro Special Tempers*							
T6S5	up thru .124	up thru 3.20	30.0 (205)	25.0 (170)	8	1390 (201)	53
	.125 - 1.000	>3.20 - 12.50	30.0 (205)	25.0 (170)	10	1390 (201)	53

1. Minimum property levels unless shown as a range or indicated as a maximum (max.)
2. The thickness of the cross section from which the tension test specimen is taken determines the applicable mechanical properties.
3. For materials of such dimensions that a standard test specimen cannot be taken, or for shapes thinner than .062”, the test for elongation is not required. Elongation percent is minimum in 2” or 4 times specimen diameter.

* Hydro Special Temper Designations are unregistered tempers for reference only, not recognized by the Aluminum Association or standard industry specifications, and are provided for customer use to identify unique processing, material or end use application characteristics.

Comparative Characteristics of Related Alloys/Tempers[1]

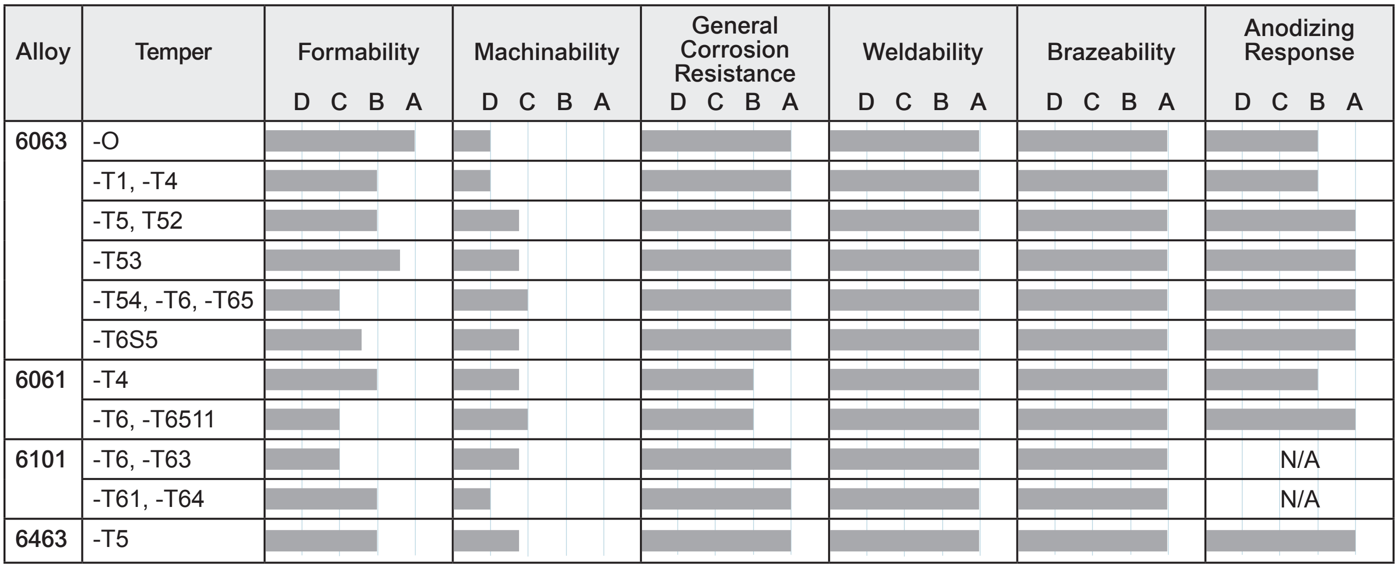

1. Rating: A = Excellent B = Good C = Fair D = Poor

Extrusion North America
6250 North River Rd, Suite 5000 Rosemont, IL 60018
Phone: 877-710-7272
E-mail: NorthAmerica.Sales@hydro.com
www.hydroextrusions.com

Hydro

Revision 2019/01 (2/2019)

PEAK TO PEAK
ENGINEERED RAILINGS

PART 1 - GENERAL

1.1 SUMMARY

A. Work in this section includes Interior and Exterior component aluminum handrail, stair rail, and guardrails.

1.2 DESIGN / PERFORMANCE REQUIREMENTS

A. Comply with requirements of building authorities having jurisdiction in Project location and the following:

1. Occupational Safety and Health Administration (OSHA):
    a. 29 CFR 1910, Occupational Safety Health Standards

2. International Code Council (ICC):
    a. International Building Code and associated standards, 2012 Edition including all amendments

B. Design, fabricate and install handrail, stair rail, and guardrails to withstand a uniformly distributed load of 50 lbs./L.F. applied in any direction and a concentrated load of 200 lbs. applied at any point and in any direction, loads shall be applied separately.

C. Structural Performance:

1. ASTM E935-13e1, Standard Test Methods for Performance or Permanent Metal Railing Systems and Rails for Buildings

2. ASTM E985-00 (2006), Standard Specification for Permanent Metal Railing Systems and Rails for Buildings

1.3 SUBMITTALS

A. Shop Drawings:

1. Indicate sizes, shapes, configuration, sections, locations, fabrication, and installation details.

2. Certify that railings, stair rails, and guardrails have been designed and fabricated to meet the loading requirements specified.

B. Product data:

   1. Confirmation that products submitted meet requirements of standards referenced.

   2. Manufacturer's Installation instructions and details

C. Samples:

   1. One Sample of a shortened post with top rail, intermediate fittings, vertical post, and kick plate.

D. Calculations:

   1. Calculations shall be performed, sealed, signed, and dated by a registered Professional Engineer licensed in the State of the Project.

E. Cleaning and Maintenance Data:

   1. Per Voluntary Guide Specification for Cleaning and Maintenance of Architectural Anodized Aluminum (Publication No. AAMA 609.1-85)

1.4 QUALITY ASSURANCE:

A. Manufacturer Qualifications: Minimum 5 years documented experience producing systems specified in this section.

B. Field Measurements & Coordination:

   1. Take field measurements prior to preparation of shop drawings and fabrication.

   2. Provide approval drawings for all fabricated material that handrail is connecting to prior to preparation of shop drawings and approved submittal drawings prior to release for fabrication.

1.5 DELIVERY, STORAGE, AND HANDLING:

A. Materials to be delivered to the job site in good condition and adequately protected against damage.

B. Store products to avoid damage from moisture, abrasion, and other jobsite activities.

C. Avoid handling on the jobsite and use caution to avoid damage to exterior surface and finishes.

1.6 WARRANTY:

A. Provide owner with manufacturer’s standard limited warranty for materials and installation (1-year standard).

PART 2 - PRODUCTS

2.0 MANUFACTURERS:

A. Acceptable manufacturers:

PEAK TO PEAK ENGINEERED RAILINGS, 3000 Youngfield St, Suite 275, Wheat Ridge, CO. Phone: 720-508-3819. Fax: 720-409-3843. Email: sales@peaktopeakrailings.com. Website: www.peaktopeakrailings.com

1. Product:
   a. Rivet Mechanical Railing System
   b. TCF Mechanical Railing System
   c. Tang Mechanical Railing System

B. Substitutions: Not permitted.

2.1 MATERIALS

A. Type:
1. Extruded Aluminum: 6005A-T61
2. Cast Aluminum Base Mounts: Alloy 535
3. Aluminum Mechanical Fittings: Alloy 1070A-O
4. Fasteners: 304 Stainless Steel

B. Size:
1. Pipe: 1-1/2 inches (1.90 inches O.D.), Schedule 40 or Schedule 80, as required per project layout and post spacing.

2.2 FINISH:

A. 215-R1, Architectural Class 1, AA-M10C22A41, Clear Anodized

2.3 RAILING AND GUARDRAIL FABRICATION:

A. Fabricate aluminum railings, stair rails, and guardrails in accordance with approved shop drawings

B. Shop Fabrication Options:

1. Sub-Assembled:
    a. All posts are to be furnished cut to length with fittings & mounting plates attached or shipped loose per their specific details.
    b. Pipe for straight rail is furnished in up to 24’-0” stock lengths for field cutting and drilling as needed.
    c. Pipe for curved rail is furnished in 21’-0” (max) rolled lengths for field cutting and drilling as needed.
    d. Pipe for cantilever railing is furnished in up to 24’-0” stock lengths for field cutting and drilling as needed.
    e. All kick plates are furnished in up to 24’-0” stock lengths for field cutting and drilling as needed.
    f. All bends and loops will be supplied with a 3-inch centerline radius and must be field cut and installed as required.

2. Assembled:
    a. Railing Panels are furnished assembled to the greatest extent possible up to a maximum length of 24’-0” long.
    b. Pipe for curved rail is furnished only as Sub-Assembled and in 21’-0” (max) rolled lengths for field cutting and drilling as needed.
    c. Pipe for cantilever railing is furnished in up to 24’-0” stock lengths for field cutting and drilling as needed.
    d. All kick plates are furnished in up to 24’-0” stock lengths for field cutting and drilling as needed.
    e. All bends and loops will be supplied with a 3-inch centerline radius and must be field cut and installed as required.

C. Pipe cuts shall be square and accurate to minimize joint gap. Cuts shall be free of all burrs left from cutting.

PART 3 - EXECUTION

3.1 PREPARATION:

A. Prior to installation, inspect that all substrates and support structures have been properly prepared and fully reviewed to verify that they are structurally sound for the anchoring of the railing system.

3.2 INSTALLATION:

A. Install all handrail, stair rail, and guardrails to meet loading requirements of the Building Code.

B. Install all material in accordance with the manufacturer’s instructions.

C. Install the railing system plumb, level, and true, free of distortion, defects and anchored securely to all substrates and support structures.

COATINGS

PRODUCT DATA SHEET

HI-BUILD EPOXOLINE® II SERIES N69

PRODUCT PROFILE

GENERIC DESCRIPTION Polyamidoamine Epoxy

COMMON USAGE An advanced generation epoxy for protection and finishing of steel and concrete. It has excellent resistance to abrasion and is suitable for immersion as well as chemical contact exposure. Contact your local Tnemec representative for a list of chemicals. This product can also be used for lining storage tanks that contain demineralized, deionized or distilled water.

COLORS Refer to Tnemec Color Guide. **Note:** Epoxies chalk with extended exposure to sunlight. Lack of ventilation, incomplete mixing, miscatalyzation or the use of heaters that emit carbon dioxide and carbon monoxide during application and initial stages of curing may cause yellowing to occur.

FINISH Satin

SPECIAL QUALIFICATIONS A two-coat system at 4.0-6.0 dry mills (100-150 dry microns) per coat passes the performance requirements of **MIL-PRF-4556F** for fuel storage.

PERFORMANCE CRITERIA Extensive test data available. Contact your Tnemec representative for specific test results.

COATING SYSTEM

SURFACER/FILLER/PATCHER 215

PRIMERS
Steel: Self-priming or Series 1, 27, 37H, 66, L69, L69F, N69F, V69F, 90E-92, 90-97, H90-97, 90G-1K97, 90-98, 91-H_2O, 94-H_2O, 135, 161, 394, 530
Galvanized Steel and Non-Ferrous Metal: Self-priming or Series 66, L69, L69F, N69F, V69F, 161
Concrete: Self-priming or Series 130, 215, 218
CMU: Self-priming or 130, 215, 218, 1254

TOPCOATS 22, 46H-413, 66, L69, L69F, N69, N69F, V69, V69F, 72, 73, 84, 104, 113, 114, 141, 156, 157, 161, 175, 180, 181, 287, 446, 740, 750, 1028, 1029, 1070, 1070V, 1071, 1071V, 1072, 1072V, 1074, 1074U, 1075, 1075U, 1077, 1078, 1080, 1081. Refer to COLORS on applicable topcoat data sheets for additional information. **Note:** The following recoat times apply for Series N69: Immersion Service—Surface must be scarified after 60 days. Atmospheric Service—After 60 days, scarification or an epoxy tie-coat is required. When topcoating with Series 740 or 750, recoat time for N69 is 21 days for atmospheric service. Contact your Tnemec representative for specific recommendations.

SURFACE PREPARATION

PRIMED STEEL **Immersion Service:** Scarify the epoxy prime coat surface by abrasive blasting with fine abrasive before topcoating if it has been exterior exposed for 60 days or longer and N69 is the specified topcoat.

STEEL
Immersion Service: SSPC-SP10/NACE 2 Near-White Blast Cleaning with a minimum angular anchor profile of 1.5 mils.
Non-Immersion Service: SSPC-SP6/NACE 3 Commercial Blast Cleaning with a minimum angular anchor profile of 1.5 mils.

GALVANIZED STEEL & NON-FERROUS METAL Surface preparation recommendations will vary depending on substrate and exposure conditions. Contact your Tnemec representative or Tnemec Technical Services.

CAST/DUCTILE IRON Contact your Tnemec representative or Tnemec Technical Services.

CONCRETE Allow new concrete to cure 28 days. For optimum results and/or immersion service, abrasive blast referencing SSPC-SP13/NACE 6, ICRI CSP 2-4 Surface Preparation of Concrete and Tnemec's Surface Preparation and Application Guide.

CMU Allow mortar to cure for 28 days. Level protrusions and mortar spatter.

PAINTED SURFACES **Non-Immersion Service:** Ask your Tnemec representative for specific recommendations.

ALL SURFACES Must be clean, dry and free of oil, grease, chalk and other contaminants.

TECHNICAL DATA

VOLUME SOLIDS 67.0 ± 2.0% (mixed) †

RECOMMENDED DFT 2.0 to 10.0 mils (50 to 255 microns) per coat. **Note:** MIL-PRF-4556F applications require two coats at 4.0-6.0 mils (100-150 microns) per coat. Otherwise, the number of coats and thickness requirements will vary with substrate, application method and exposure. Contact your Tnemec representative.

CURING TIME AT 5 MILS DFT Without 44-700 Accelerator

Temperature	To Handle	To Recoat	Immersion
90°F (32°C)	5 hours	7 hours	7 days
80°F (27°C)	7 hours	9 hours	7 days
70°F (21°C)	9 hours	12 hours	7 days
60°F (16°C)	16 hours	22 hours	9 to 12 days
50°F (10°C)	24 hours	32 hours	12 to 14 days

Curing time varies with surface temperature, air movement, humidity and film thickness. **Note:** For faster curing and low-temperature applications, add No. 44-700 Epoxy Accelerator; see separate product data sheet for cure information.

VOLATILE ORGANIC COMPOUNDS
Unthinned: 2.40 lbs/gallon (285 grams/litre)
Thinned 10% (No. 4 Thinner): 2.80 lbs/gallon (334 grams/litre)
Thinned 10% (No. 60 Thinner): 2.80 lbs/gallon (335 grams/litre)

HAPS
Unthinned: 2.40 lbs/gal solids
Thinned 10% (No. 4 Thinner): 3.25 lbs/gal solids
Thinned 10% (No. 60 Thinner): 2.40 lbs/gal solids

THEORETICAL COVERAGE 1,074 mil sq ft/gal (26.4 m^2/L at 25 microns). See APPLICATION for coverage rates. †

NUMBER OF COMPONENTS Two: Part A (amine) and Part B (epoxy) — One (Part A) to one (Part B) by volume.

PACKAGING 5 gallon (18.9L) pails and 1 gallon (3.79L) cans — Order in multiples of 2.

NET WEIGHT PER GALLON 13.67 ± 0.25 lbs (6.10 ± .11 kg) (mixed) †

STORAGE TEMPERATURE Minimum 20°F (-7°C) Maximum 110°F (43°C)

TEMPERATURE RESISTANCE (Dry) Continuous 250°F (121°C) Intermittent 275°F (135°C)

SHELF LIFE Part A: 24 months; Part B: 12 months at recommended storage temperature.

FLASH POINT - SETA Part A: 82°F (28°C) Part B: 93°F (34°C)

HEALTH & SAFETY Paint products contain chemical ingredients which are considered hazardous. Read container label warning and Material Safety Data Sheet for important health and safety information prior to the use of this product.
Keep out of the reach of children.

APPLICATION

COVERAGE RATES

	Dry Mils (Microns)	Wet Mils (Microns)	Sq Ft/Gal (m^2/Gal)
Suggested (1)	6.0 (150)	9.0 (230)	179 (16.6)
Minimum	2.0 (50)	3.0 (75)	537 (49.9)
Maximum	10.0 (250)	15.0 (375)	107 (10.0)

Dense Concrete & Masonry: From 100 to 150 sq ft (9.3 to 13.9 m^2) per gallon.
CMU: From 75 to 100 sq ft (7.0 to 9.3 m^2) per gallon.
(1) Note for Steel: Roller or brush application requires two or more coats to obtain recommended film thickness. Also, Series N69 can be spray applied to an optional high-build film thickness range of 8.0 to 10.0 dry mils (205 to 255 dry microns) or 11.5 to 14.5 wet mils (209 to 370 wet microns). Allow for overspray and surface irregularities. Film thickness is rounded to the nearest 0.5 mil or 5 microns. Application of coating below minimum or above maximum recommended dry film thicknesses may adversely affect coating performance. †

MIXING

1. Start with equal amounts of both Parts A & B.
2. Using a power mixer, separately stir Parts A & B.
3. (For accelerated version. If not using 44-700, skip to No. 4.) Add four (4) fluid ounces of 44-700 per gallon of Part A while Part A is under agitation.
4. Add Part A to Part B under agitation, stir until thoroughly mixed.
5. Both components must be above 50°F (10°C) prior to mixing. For application of the unaccelerated version to surfaces between 50°F to 60°F (10°C to 16°C) or the accelerated version to surfaces between 35°F to 50°F (2°C to 10°C), allow mixed material to stand 30 minutes and restir before using.
6. For optimum application properties, the material temperature should be above 60°F (16°C).

Note: The use of more than the recommended amount of 44-700 will adversely affect performance.

THINNING Use No. 4 or No. 60 Thinner. For air spray, thin up to 10% or 3/4 pint (380 mL) per gallon. For airless spray, roller or brush, thin up to 5% or 1/4 pint (190 mL) per gallon.

POT LIFE
Without 44-700: 6 hours at 50°F (10°C) 4 hours at 75°F (24°C) 1 hour at 100°F (38°C)
With 44-700: 2 hours at 50°F (10°C) 1 hour at 75°F (24°C) 30 minutes at 100°F (38°C)

SPRAY LIFE Without 44-700: 1 hour at 75°F (24°C) With 44-700: 30 minutes at 75°F (24°C)
Note: Spray application after listed times will adversely affect ability to achieve recommended dry film thickness.

APPLICATION EQUIPMENT

Air Spray ‡

Gun	Fluid Tip	Air Cap	Air Hose ID	Mat'l Hose ID	Atomizing Pressure	Pot Pressure
DeVilbiss JGA	E	765 or 704	5/16" or 3/8" (7.9 or 9.5 mm)	3/8" or 1/2" (9.5 or 12.7 mm)	75-100 psi (5.2-6.9 bar)	10-20 psi (0.7-1.4 bar)

Low temperatures or longer hoses require higher pot pressure.

Airless Spray ‡

Tip Orifice	Atomizing Pressure	Mat'l Hose ID	Manifold Filter
0.015"-0.019" (380-485 microns)	3000-4800 psi (207-330 bar)	1/4" or 3/8" (6.4 or 9.5 mm)	60 mesh (250 microns)

Use appropriate tip/atomizing pressure for equipment, applicator technique and weather conditions.
‡ Spray application of first coat on CMU should be followed by backrolling. **Note:** Application over inorganic zinc-rich primers: Apply a wet mist coat and allow tiny bubbles to form. When bubbles disappear in 1 to 2 minutes, apply a full wet coat at specified mil thickness.
Roller: Use 3/8" or 1/2" (9.5 mm or 12.7 mm) synthetic woven nap roller cover. Use longer nap to obtain penetration on rough or porous surfaces.
Brush: Recommended for small areas only. Use high quality natural or synthetic bristle brushes.

SURFACE TEMPERATURE Minimum 50°F (10°C) Maximum 135°F (57°C) The surface should be dry and at least 5°F (3°C) above the dew point. Coating will not cure below minimum surface temperature.

CLEANUP Flush and clean all equipment immediately after use with the recommended thinner or MEK.
† Values may vary with color.

WARRANTY & LIMITATION OF SELLER'S LIABILITY: Tnemec Company, Inc. warrants only that its coatings represented herein meet the formulation standards of Tnemec Company, Inc. THE WARRANTY DESCRIBED IN THE ABOVE PARAGRAPH SHALL BE IN LIEU OF ANY OTHER WARRANTY, EXPRESSED OR IMPLIED, INCLUDING BUT NOT LIMITED TO, ANY IMPLIED WARRANTY OF MERCHANTABILITY OR FITNESS FOR A PARTICULAR PURPOSE. THERE ARE NO WARRANTIES THAT EXTEND BEYOND THE DESCRIPTION ON THE FACE HEREOF. The buyer's sole and exclusive remedy against Tnemec Company, Inc. shall be for replacement of the product in the event a defective condition of the product should be found to exist and the exclusive remedy shall not have failed its essential purpose as long as Tnemec is willing to provide comparable replacement product to the buyer. NO OTHER REMEDY (INCLUDING, BUT NOT LIMITED TO, INCIDENTAL OR CONSEQUENTIAL DAMAGES FOR LOST PROFITS, LOST SALES, INJURY TO PERSON OR PROPERTY, ENVIRONMENTAL INJURIES OR ANY OTHER INCIDENTAL OR CONSEQUENTIAL LOSS) SHALL BE AVAILABLE TO THE BUYER. Technical and application information herein is provided for the purpose of establishing a general profile of the coating and proper coating application procedures. Test performance results were obtained in a controlled environment and Tnemec Company makes no claim that these tests or any other tests, accurately represent all environments. As application, environmental and design factors can vary significantly, due care should be exercised in the selection and use of the coating.

TNEMEC

PRODUCT DATA SHEET

ENDURA-SHIELD® SERIES 73

PRODUCT PROFILE

GENERIC DESCRIPTION Aliphatic Acrylic Polyurethane

COMMON USAGE A coating highly resistant to abrasion, wet conditions, corrosive fumes, chemical contact and exterior weathering. High build quality combines with project specific primers for two-coat, labor saving systems. NOT FOR IMMERSION SERVICE.

COLORS Refer to Tnemec Color Guide. **Note:** Certain colors may require multiple coats depending on method of application and finish coat color. When feasible, the preceding coat should be in the same color family (blue, gray, etc.), but noticeably different.

FINISH Semi-gloss

SPECIAL QUALIFICATIONS Series 73 meets the accelerated weathering requirements of SSPC Paint Standard 36.

PERFORMANCE CRITERIA Extensive test data available. Contact your Tnemec representative for specific test results.

COATING SYSTEM

PRIMERS

Steel: Series 1, 20, FC20, 27, 37H, 66, L69, L69F, N69, N69F, V69, V69F, 90-97, H90-97, 90G-1K97, 91-H_2O, H91-H_2O, 94-H_2O, 135, L140, L140F, N140, N140F, V140, V140F, 141, 161, 394, 530
Galvanized Steel & Non-Ferrous Metal: Series 66, L69, L69F, N69, N69F, V69, V69F, 161
Concrete: Series 66, L69, L69F, N69, N69F, V69, V69F, 141, 161, 1254
CMU: Series 1254
Note: Series 530 exterior exposed more than 24 hours, Series L69, N69, V69, 135, L140, N140, or V140 exterior exposed more than 60 days, Series L69F, N69F, V69F, L140F, N140F or V140F exterior exposed more than 30 days, or Series 141 exterior exposed more than 14 days must first be scarified or reprimed with themselves. Brush blasting with fine abrasive is the preferred method of scarification. Recoat windows for other primers may apply. See those data sheets for additional information.

TOPCOATS Series 700, 701, 740, 750, 1070, 1070V, 1071, 1071V, 1072, 1072V, 1074, 1074U, 1075, 1075U, 1077, 1078

SURFACE PREPARATION

ALL SURFACES Must be clean, dry and free of oil, grease and other contaminants.
See primer product data sheet for surface preparation recommendation.

TECHNICAL DATA

VOLUME SOLIDS 58.0 ± 2.0% (mixed) †

RECOMMENDED DFT 2.0 to 5.0 mils (50 to 125 microns) per coat. **Note:** Number of coats and thickness requirements will vary with substrate, application method and exposure. Contact your Tnemec representative.

CURING TIME

Temperature	To Touch	To Handle	To Recoat
75°F (24°C)	1 hour	5-8 hours	12 hours

Curing time varies with surface temperature, air movement, humidity and film thickness. **Note:** For faster curing and low-temperature applications, add No. 44-710 Urethane Accelerator; see separate product data sheet.

VOLATILE ORGANIC COMPOUNDS

Unthinned	Thinned 10% (Max) (No. 39 Thinner)	Thinned 10% (Max) (No. 42 Thinner)	Thinned 10% (Max) (No. 48 Thinner)	Thinned 10% (Max) (No. 56 Thinner)	Thinned 10% (Max) (No. 63 Thinner)
2.70 lbs/gallon (324 grams/litre)	3.05 lbs/gallon (366 grams/litre)	3.10 lbs/gallon (371 grams/litre)	3.15 lbs/gallon (378 grams/litre)	2.76 lbs/gallon (331 grams/litre)	3.07 lbs/gallon (368 grams/litre)

HAPS

Unthinned	Thinned 10% (Max) (No. 39 Thinner)	Thinned 10% (Max) (No. 42 Thinner)	Thinned 10% (Max) (No. 48 Thinner)	Thinned 10% (Max) (No. 56 Thinner)	Thinned 10% (Max) (No. 63 Thinner)
0.27 lbs/gal solids	0.27 lbs/gal solids	0.27 lbs/gal solids	0.27 lbs/gal solids	0.27 lbs/gal solids	0.32 lbs/gal solids

THEORETICAL COVERAGE 930 mil sq ft/gal (22.8 m^2/L at 25 microns). †

NUMBER OF COMPONENTS Two: Part A and Part B

MIXING RATIO By volume: Four (Part A) to one (Part B)

PACKAGING

	PART A	PART B	When Mixed
5 Gallon Kit	5 gallon pail (partial fill)	1 gallon can	5 gallons (18.9L)
1 Gallon Kit	1 gallon pail (partial fill)	1 quart can (partial fill)	1 gallon (3.79L)

NET WEIGHT PER GALLON 12.13 ± 0.25 lbs (5.50 ± .11 kg) †

STORAGE TEMPERATURE Minimum 20°F (-7°C) Maximum 110°F (43°C)

TEMPERATURE RESISTANCE (Dry) Continuous 250°F (121°C) Intermittent 275°F (135°C)

SHELF LIFE Part A: 24 months at recommended storage temperature.
Part B: 12 months at recommended storage temperature.

FLASH POINT - SETA Part A: 55°F (13°C) Part B: 112°F (43°C)

HEALTH & SAFETY Paint products contain chemical ingredients which are considered hazardous. Read container label warning and Material Safety Data Sheet for important health and safety information prior to the use of this product.
Keep out of the reach of children.

APPLICATION

COVERAGE RATES

Conventional Build (Spray, Brush or Roller)

	Dry Mils (Microns)	Wet Mils (Microns)	Sq Ft/Gal (m^2/Gal)
Suggested	2.5 (65)	4.5 (115)	372 (34.6)
Minimum	2.0 (50)	3.5 (90)	465 (43.2)
Maximum	3.0 (75)	5.0 (155)	310 (28.8)

High-Build (Spray Only)

	Dry Mils (Microns)	Wet Mils (Microns)	Sq Ft/Gal (m^2/Gal)
Suggested	4.0 (100)	7.0 (180)	233 (21.6)
Minimum	3.0 (75)	5.0 (125)	310 (28.8)
Maximum	5.0 (125)	8.5 (215)	186 (17.3)

(1) Can be spray applied at 3.0 to 5.0 mils (75 to 125 microns) DFT per coat when extra protection or the elimination of a coat is desired.
(2) Can be sprayed, brushed or rolled at 2.0 to 3.0 mils (50 to 75 microns) DFT per coat for use in systems requiring a conventional build topcoat.
Allow for overspray and surface irregularities. Wet film thickness is rounded to the nearest 0.5 mil or 5 microns.
Application of coating below minimum or above maximum recommended dry film thicknesses may adversely affect coating performance. †

MIXING

Stir contents of the container marked Part A, making sure no pigment remains on the bottom. Add the contents of the can marked Part B to Part A while under agitation. Continue agitation until the two components are thoroughly mixed. When used with 44-710 Urethane Accelerator, first blend 44-710 into Part A under agitation; continue as above. Do not use mixed material beyond pot life limits. **Caution: Part B is moisture-sensitive and will react with atmospheric moisture. Keep unused material tightly closed at all times.**

THINNING

For air spray, thin up to 10% or 3/4 pint (380 mL) per gallon by volume with No. 42 Thinner if temperatures are below 80°F (27°C), use No. 48 Thinner for temperatures above 80°F (27°C). Thin up to 5% or 1/4 pint (190 mL) per gallon for airless spray. For brush or roller, thin 5% to 10% or 1/4 to 3/4 pint (190 to 380 mL) per gallon with No. 39 or No. 63 Thinner. Thinning is required for proper brush or roller application. **Note:** A maximum of 10% of No. 56 Thinner may be used to comply with VOC regulations. **Caution: Do not add thinner if more than thirty (30) minutes have elapsed after mixing.**

POT LIFE

8 hours at 40°F (4°C) 4 hours at 77°F (25°C) 2 hours at 100°F (38°C)

APPLICATION EQUIPMENT

Air Spray

Gun	Fluid Tip	Air Cap	Air Hose ID	Mat’l Hose ID	Atomizing Pressure	Pot Pressure
DeVilbiss JGA	E	765 or 704	5/16” or 3/8” (7.9 or 9.5 mm)	3/8” or 1/2” (9.5 or 12.7 mm)	75-90 psi (5.2-6.2 bar)	10-20 psi (0.7-1.4 bar)

Low temperatures or longer hoses require higher pot pressure.

Airless Spray

Tip Orifice	Atomizing Pressure	Mat’l Hose ID	Manifold Filter
0.013”-0.017” (330-430 microns)	2700-3300 psi (186-228 bar)	1/4” or 3/8” (6.4 or 9.5 mm)	60 mesh (250 microns)

Use appropriate tip/atomizing pressure for equipment, applicator technique and weather conditions.
Roller: Use 1/4” to 3/8” (6.4 mm to 9.5 mm) synthetic woven nap roller cover. Do not use long nap roller covers. **Note:** Two coats are required to obtain dry film thickness above 3.0 mils (75 microns).
Brush: Recommended for small areas only. Use high quality natural or synthetic bristle brushes. **Note:** Two or more coats may be required to obtain recommended film thicknesses.

SURFACE TEMPERATURE

Minimum 35°F (2°C) Maximum 120°F (49°C)
The surface should be dry and at least 5°F (3°C) above the dew point.
Cure time necessary to resist direct contact with moisture at surface temperature:
40°F (4°C): 24 to 40 hours 50°F (10°C): 18 to 26 hours 60°F (16°C): 12 to 16 hours
70°F (21°C): 4 to 8 hours 90°F (32°C): 2 to 4 hours 100°F (38°C): 2 to 3 hours
If the coating is exposed to moisture before the preceding cure parameters are met, dull, flat or spotty appearing areas may develop. Actual times will vary with air movement, film thickness and humidity.

CLEANUP

Flush and clean all equipment immediately after use with the recommended thinner or MEK.

† Values may vary with color.

STATEMENT OF QUALIFICATIONS/ INSTALLATION LIST

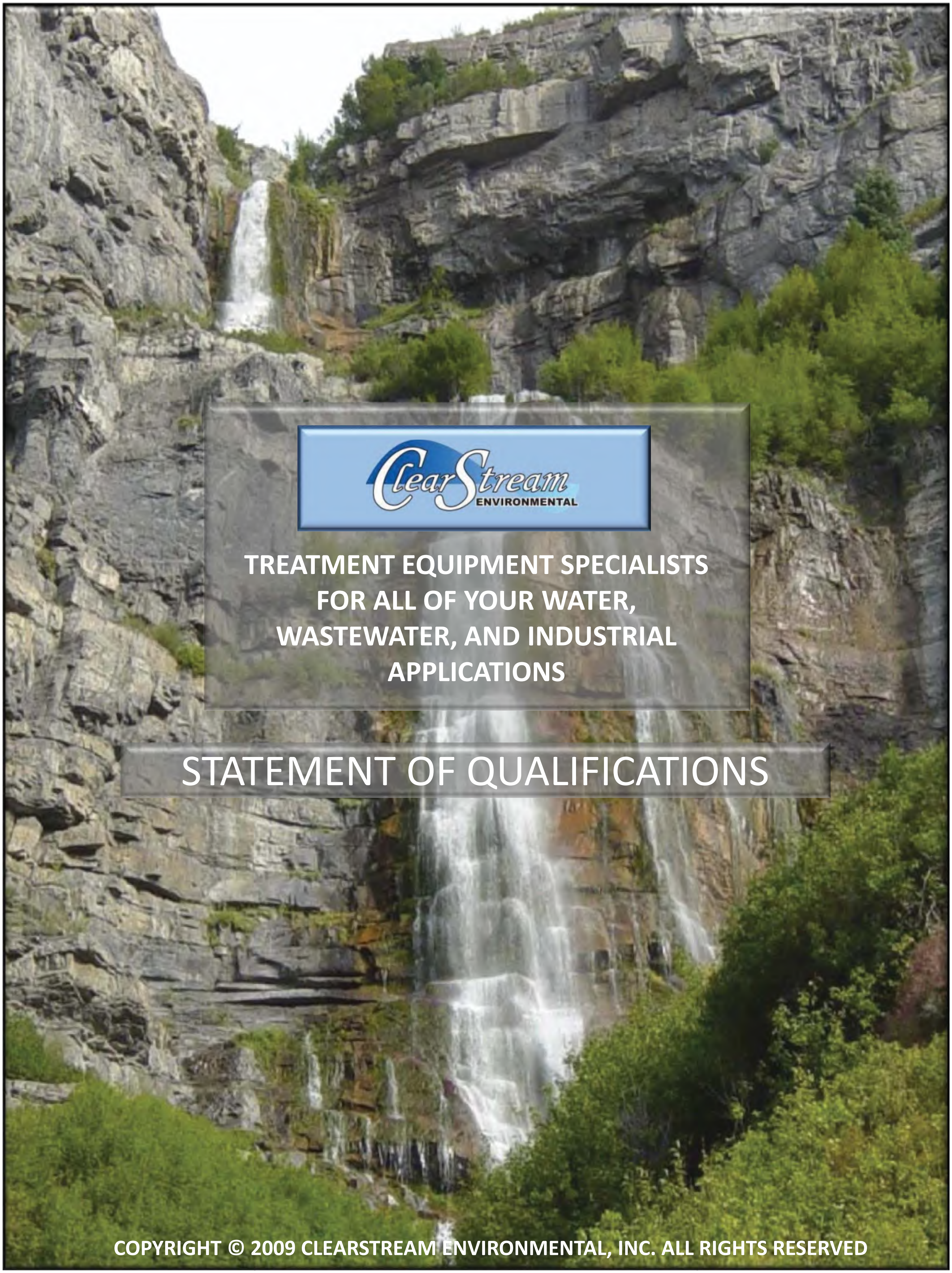

ClearStream ENVIRONMENTAL

TREATMENT EQUIPMENT SPECIALISTS FOR ALL OF YOUR WATER, WASTEWATER, AND INDUSTRIAL APPLICATIONS

STATEMENT OF QUALIFICATIONS

CLEARSTREAM ENVIRONMENTAL
STATEMENT OF QUALIFICATIONS

CORPORATE SUMMARY:

ClearStream Environmental was incorporated in 2002 to provide superior process equipment to the water and wastewater treatment industries. ClearStream has experienced tremendous success over the past few years, and has grown by approximately 100% per year for the past seven years. In 2013, ClearStream achieved gross sales of $9M USD, and are planning to continue to grow aggressively in the future. The success of the company can be directly attributed to our philosophy of supplying innovative, high quality, and competitively priced equipment, with superior customer service and support.


145’ SECONDARY CLARIFIER – NEW HAMPSHIRE, USA


140’ SUCTION PIPE CLARIFIER– MASSACHUSETTS, USA

EXPERIENCE:

The ClearStream technical staff has combined industry experience in excess of 75 years. Corporate management has been working in the water & wastewater treatment arena for nearly 55 years. ClearStream maintains a highly trained technical staff of engineers, project managers, equipment designers, procurement specialists, and detail draftsmen to ensure product quality and safety. A detailed installation & experience list is presented in Appendix A. Detailed resumes for corporate management are presented in Appendix B.

PRODUCTS:

ClearStream offers a complete line of sedimentation equipment for all municipal and industrial applications. We can supply equipment ranging from very small pilot type mechanisms to very large and complex treatment equipment. ClearStream equipment is custom designed and fabricated to each individual customer’s needs and specifications.


120’ PRIMARY CLARIFIER– MISSOURI, USA

PRODUCTS (CONTINUED):

ClearStream equipment has been installed, commissioned, and is reliably operating all over the world in numerous process applications. ClearStream welcomes all opportunities to supply proposals for any customer equipment needs. Letters of recommendation by past and current customers and project partners are presented in Appendix C.

40’ Dissolved Air Flotation – OHIO, USA

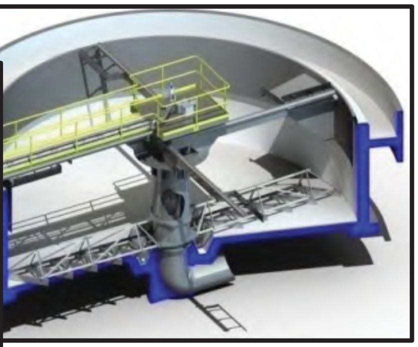

40’ DAF CAD Design

50’ CLARIFIER – PUERTO RICO

50’ REACTOR CLARIFIER – NORTH CAROLINA, USA

35M CLARIFIER – SAUDI ARABIA

30.5M PRIMARY CLARIFIER – MEXICO

30’ THICKENER – KENTUCKY, USA

PROCESS EQUIPMENT:

ClearStream offers a full line of process equipment. All of our equipment is custom designed and optimized to meet each individual customer's specification and performance requirements.

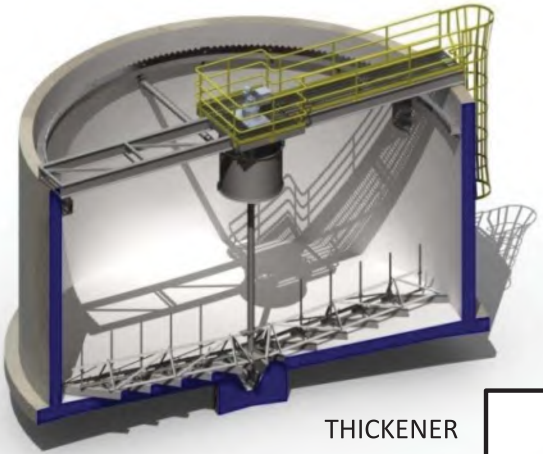

THICKENER

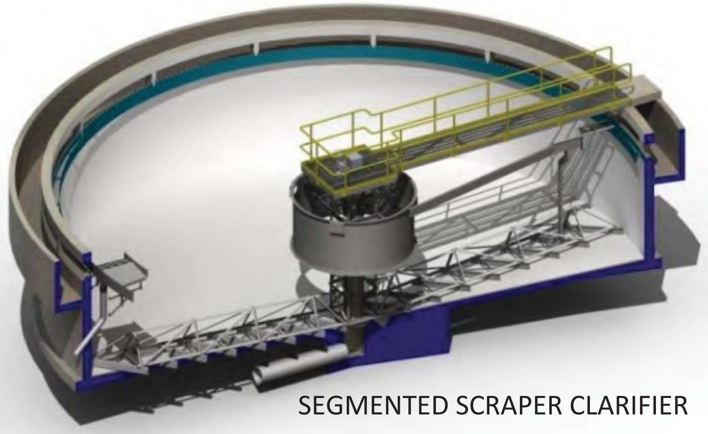

SEGMENTED SCRAPER CLARIFIER

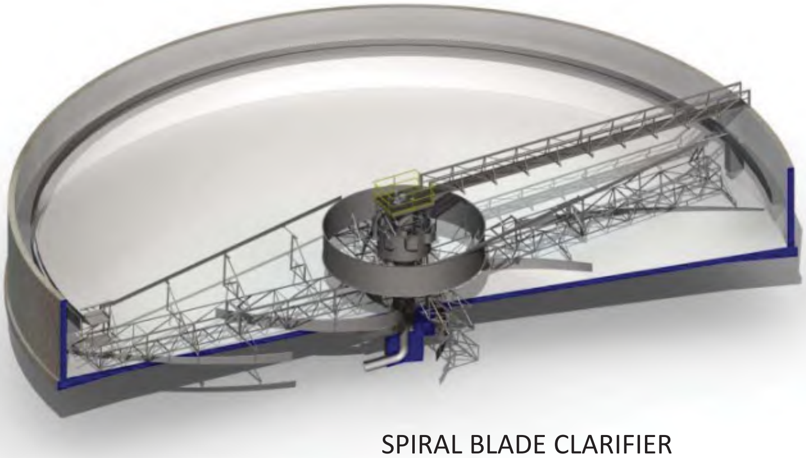

SPIRAL BLADE CLARIFIER

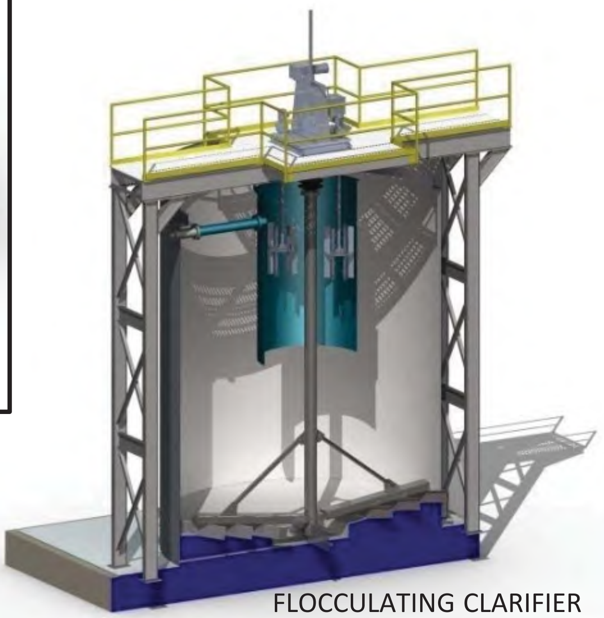

FLOCCULATING CLARIFIER

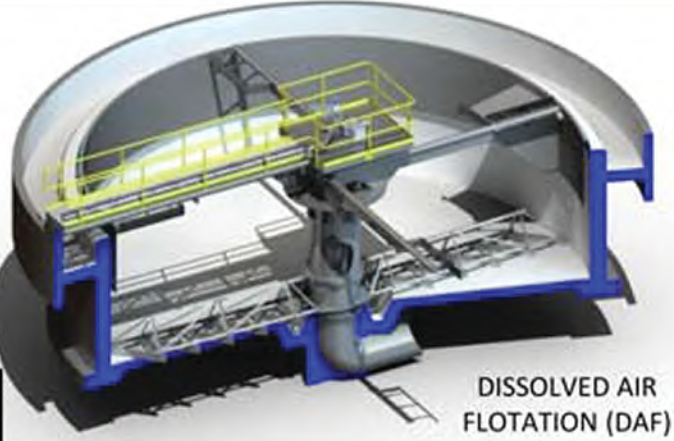

DISSOLVED AIR FLOTATION (DAF)

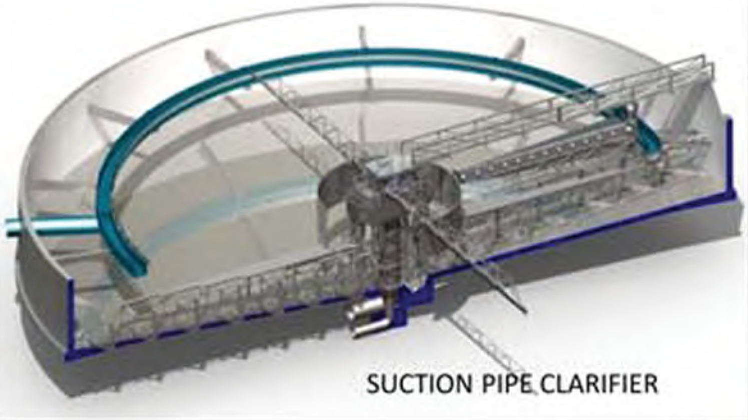

SUCTION PIPE CLARIFIER

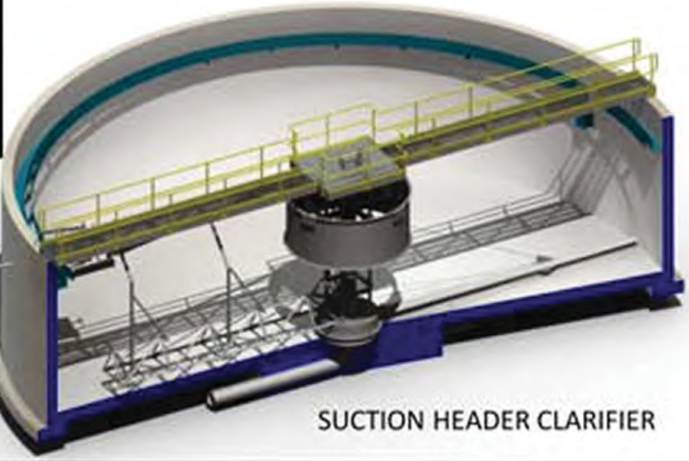

SUCTION HEADER CLARIFIER

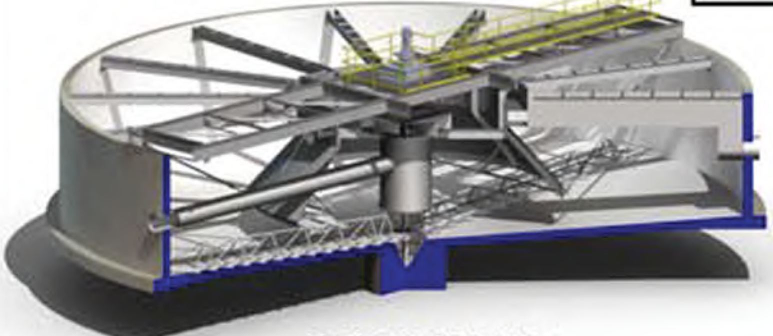

REACTOR CLARIFIER

DIGESTER COVERS

CLEARSTREAM ENVIRONMENTAL

TREATMENT EQUIPMENT SPECIALISTS

WE ARE PROUD TO OFFER:

CLEARFLO BIOLOGICAL PROCESS SOLUTIONS

CLEARFLO JET AERATION SYSTEMS:

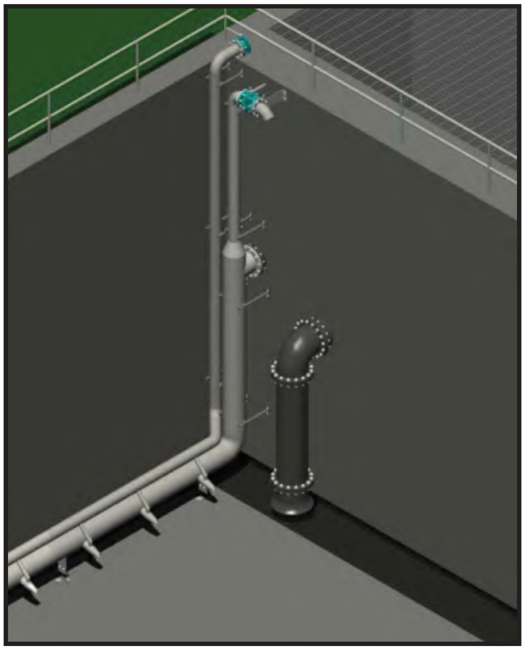

ClearFlo jet aeration systems offer state of the art aeration and mixing for a wide variety municipal and industrial wastewater and process applications.

Independent control of oxygen transfer and mixing, low installation costs, long life, high clean water transfer efficiency, high “dirty water” transfer efficiency, low maintenance, thermal conservation, and clean operation (eliminates airborn volatiles) make jets the ideal choice for new facilities, as well as upgrades, and process optimization projects.

CLEARFLO SEQUENCING BATCH REACTOR SYSTEMS:

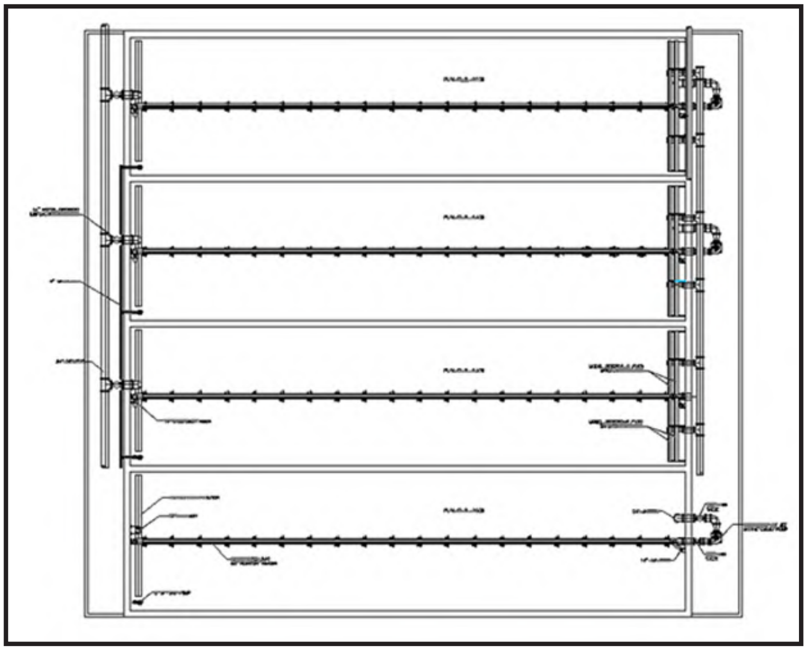

ClearFlo SBR systems are optimized for a wide variety of applications; from small packaged single train systems, to large **Constant Level SBR** systems. State of the art SBR designs are available to meet the Nation’s toughest BNR standards. Our proprietary operating strategy enables ClearFlo SBR systems to treat flows from zero to 350% of design flow without bypassing, or permit violations.

CLEARFLO CONTINUOUS LOOP REACTOR SYSTEMS:

ClearFlo CLR systems are optimized for a wide variety of applications; from small packaged “bullseye” systems with an oxidation channel wrapped around a ClearStream clarifier for carbonaceous and ammonia removal, to large **multi-channel** systems for reliable and cost effective BNR processes.

Deeper space saving basins increase overall efficiency, and reduce heat loss during winter operation. Clean operating subsurface jet aeration eliminates mist and spray, Low maintenance, (no shafts or disks to break, or expensive gear drives to service), and long life make ClearFlo CLR Systems the clear choice.

CLEARFLO PROCESS OPTIMIZATION AND RETROFITS:

Tightening effluent standards and rising energy costs have left many facilities in an untenable situation. Process systems designed and installed in the 1970s and 80s are incapable of meeting current effluent standards, and the power costs continue to rise. Let ClearStream process engineers evaluate your current system and develop a plan to increase capacity, meet current standards, and reduce energy consumption.

CLEARFLO HYBRID DIGESTER SLUDGE MINIMIZATION SYSTEMS:

By combining facultative/anaerobic and aerobic digestion chambers, ClearFlo process engineers can reduce solids sent to disposal by up 80% compared to conventional solids digestion systems. Using proven principles of enhanced facultative cell lysis, coupled with state of the art ORP control, a ClearFlo Hybrid digestion system can reduce solids handling costs to a fraction of that of current aerobic systems.

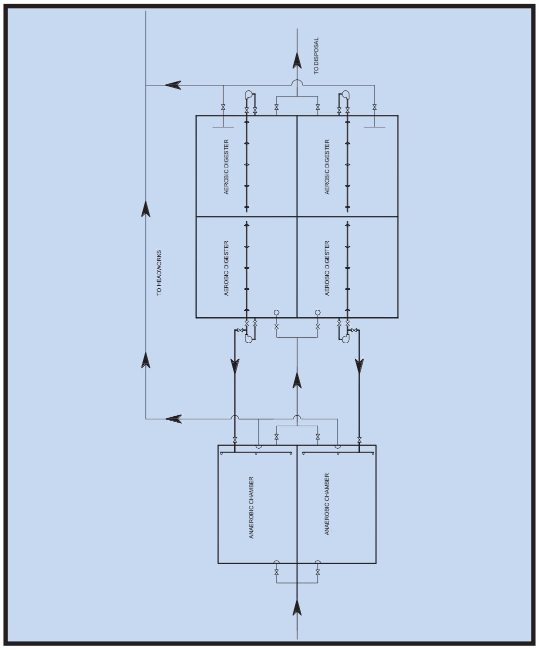

TANKAGE & INSTALLATION:

ClearStream offers steel and fiberglass tank supply to complement our sedimentation equipment lines. Additionally, we offer turn-key installation services for the tank and mechanism if desired by the customer. Our in-house specialists can oversee the construction and installation of the mechanism and tank to create a single source for the entire treatment package.

FIELD SERVICE & RETROFIT SERVICES:

ClearStream also offers field service for existing mechanisms, including part replacement and rehabilitation. We can also supply complete retro-fit of existing mechanisms supplied by any manufacturer. Many ClearStream supplied replacement units are currently in operation all over the world.

DRIVE UNITS:

ClearStream drive units provide a superior treatment package. Drives are available in fabricated steel or stainless steel all with a precision main gear and bearing with torque protection system.

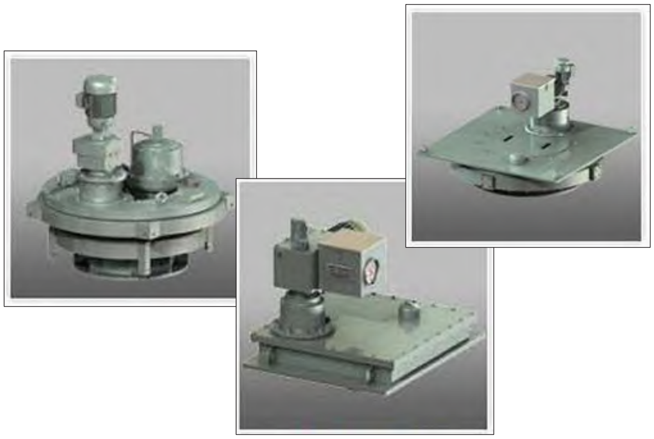

DESIGN METHODOLOGY:

ClearStream utilizes cutting edge analysis and design technologies to custom design each piece of process equipment to meet each individual customer's needs. All equipment is analyzed using advanced Computational Fluid Dynamic (CFD), Finite Element Analysis (FEA) and Civil / Structural software codes, to ensure process performance and structural integrity. All mechanisms are fully designed in a 3-D CAD environment to produce the highest quality, and customer friendly designs possible.


26' Clarifier Installation


26' Clarifier CAD Design

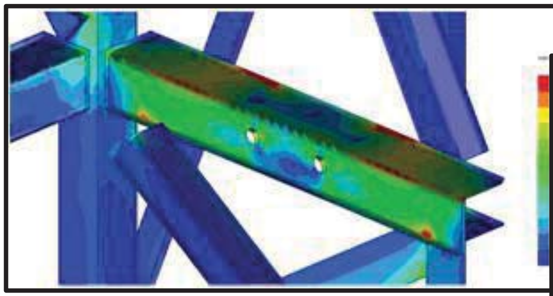
Rake Arm FEA Analysis

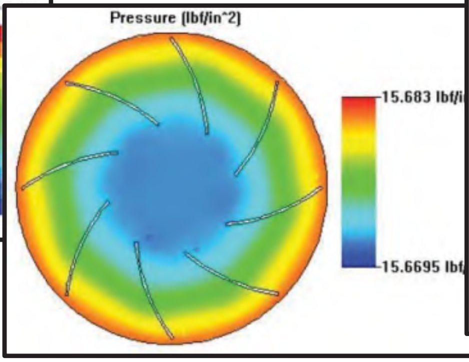

Radial Turbine CFD Analysis

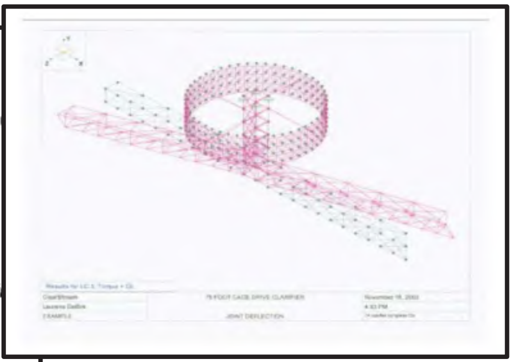
RISA Structural Analysis

ADDITONAL DESIGN RESOURCES:

In addition to substantial internal capability for design and testing, ClearStream utilizes several outside, independent , design resources to ensure the highest quality equipment designs. To complement internal capabilities, ClearStream occasionally contracts with an independent testing lab (Pocock Industrial) for additional support on more elaborate projects.

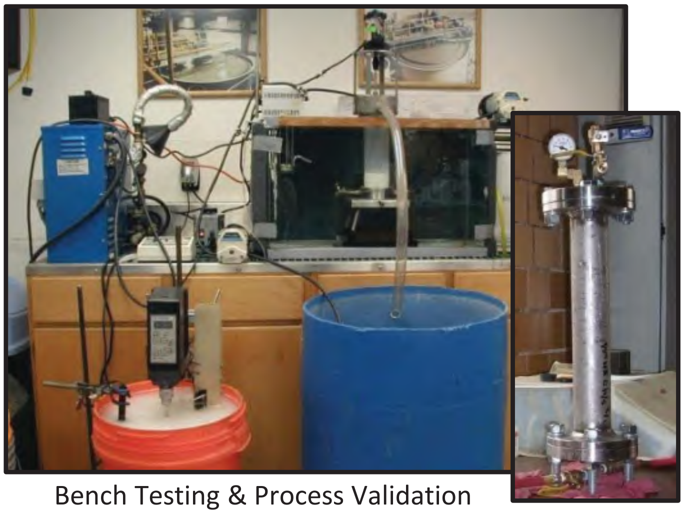
Bench Testing & Process Validation

CONTACT US:

ClearStream Environmental is located in metropolitan Salt Lake City, Utah. Our address and contact information is:

9547 South 500 West
Sandy, UT 84070

(801) 676-1890 Phone
(801) 676-1893 Fax
www.clearstreameng.com

MAP TO CLEARSTREAM ENVIRONMENTAL

APPENDIX A – INSTALLATION LIST

Installation List

PO Year Job Name/Location/Equipment type

2003 City of Appleton, Wisconsin
(2) 45’ dia. Thickeners.
OEM Account

2004 Zapotlanejo, Mexico
74' dia. Secondary Clarifier
Design Only

2004 BP Chemical – Decatur, Alabama
(1) 26’ stainless steel clarifier with lift, elevated tank and erection
Engineer: BP AVC Technology

2005 Millersburg, Ohio
(1) 48’ diameter Spiral Blade Clarifier
Engineer: ATS Engineers

2005 Duke Energy, South Carolina
(1) 40’ thickener with lift
OEM Account

2005 BP Chemical – Decatur, Alabama
(2) 26’ diameter stainless steel clarifiers with lift, elevated tank and erection
Engineer: BP AVC Technology

2005 Pleasant Prairie, Wisconsin
(1) 17’ diameter clarifier with lift
OEM Account

2005 BP Chemical, Unit 1 – Cooper River, South Carolina
(1) 32’ diameter stainless steel clarifier with lift, elevated tank and erection

2005 Wooster, Ohio
(3) 60’ Primary Clarifiers
(1) 40’ FOG Clarifier (Dissolved Air Flotation Clarifier)
Engineer: ATS Engineers

2005 Kissimmee, FL
(1) 18.5’ clarifier (316 stainless steel)
OEM Account

2005 Salisbury, MD
(1) 110’ diameter secondary clarifier, 4 walkway replacements.
Engineer: O’Brien & Gere

Installation List

PO Year	Job Name/Location/Equipment type
2005	Camuy, Puerto Rico (6) 50’ Clarifiers Engineer: Roe and Associates
2005	Mak Engineering, China (1) 80’ diameter Solids Contact Clarifier
2005	Belews Creek, Duke Energy (2) 50’ Cage Drive Solid Contact Clarifiers
2006	Wichita, Kansas (1) 17’-6” diameter clarifier (304 stainless steel) OEM Account
2006	Somersworth, NH (2) 13’-3” Clarifiers OEM Account
2006	BP Chemical, Unit 2 – Cooper River, South Carolina (1) 26’ diameter stainless steel clarifier with lift, elevated tank and erection.
2006	Talpa, Mexico (2) 14 M Secondary Clarifiers
2006	Saltillo Principal, Mexico (5) 30 M Primary Flocculating Clarifiers (5) 38.8 M Secondary Clarifiers – Spiral Blade
2006	La Morino, Mexico (2) 30 M Secondary Clarifiers
2006	Saltillo – Gran Bosque, Mexico (2) 15.2 M Secondary Clarifiers
2006	Tijuana – Los Olivos, Mexico (2) 46.5 M Secondary Clarifiers – Spiral Blade
2006	Oaxaca, Mexico (3) 42.3 M Secondary Clarifiers – Spiral Blade
2006	Anasco, Puerto Rico (1) 25’ Thickener

Installation List

PO Year	Job Name/Location/Equipment type
2006	Lares, Puerto Rico (2) 32’ Primary Shaft Drive Clarifiers (2) 50’ Secondary Shaft Drive Clarifiers.
2006	Dorado, PR (1) 55’ Diameter Clarifier
2006	Tijuana – La Gloria (2) 32 M Secondary Clarifiers – Spiral Blade
2006	Rabigh Refinery, Saudi Arabia (1) 25 M Segmented Blade Clarifier (1) 35 M Segmented Blade Clarifier Engineer: TSK Co., LTD.
2006	Allen Steam Station, SC (2) 40’ Diameter Cage Drive Solids Contact Clarifiers OEM Account
2006	Monroe Steam Station, MI (2) 55’ Diameter Cage Drive Solids Contact Clarifiers OEM Account
2006	Reliant Power (2) 25’ diameter Solids Contact Clarifiers OEM Account
2007	Geneva, NY (1) 21’ Shaft Drive Clarifier OEM Account
2007	Patillas, PR (1) 35’ Thickener Engineer: Luis Hernandez Y Asociados, CSP.
2007	City of St. Joseph, MO (2) 120’ Primary Clarifiers - Spiral Blade Engineer: The City of St. Joseph
2007	Las Marias, PR (2) 16’ Diameter Shaft Drive Clarifiers OEM Account

Installation List

PO Year	Job Name/Location/Equipment type
2007	Gilbert, AZ (2) 21'-3" Shaft Drive Clarifiers OEM Account
2007	Papillion, NY (1) 19' Shaft Drive Clarifier OEM Account
2007	Hindman, KY (2) 11'-2" Diameter Shaft Drive Clarifiers OEM Account
2007	Samsung (1) 28' Solids Contact Clarifier OEM Account
2007	Fairfield, Ca (2) 28' Diameter Shaft Drive Clarifiers. OEM Account
2007	Hatfield Ferry, Mason, PA (2) 45' Solids Contact Clarifiers OEM Account
2007	Manchester, NH (3) 145' Clarifiers – Spiral Blade Engineer: Metcalf & Eddy/AECOM
2007	Mirant Chalk Point Station (1) 23' Solids Contact Clarifier
2007	Mirant Morgantown Station (1) 30' Solids Contact Clarifier
2007	Reliant Keystone Station (2) 35' Solids Contact Clarifiers
2007	Mirant Dickerson (1) 23' Solids Contact Clarifier
2007	Upper Blackstone, MA (8) 140' Diameter Suction Pipe Clarifiers Engineer: CDM

Installation List

PO Year	Job Name/Location/Equipment type
2008	Tampa Bay, FL (2) 32.8’ Shaft Drive Clarifiers OEM Account
2008	Brandon Shores (2) 33’ Flocculating Clarifiers (2) 30’ Solids Contact Clarifiers OEM Account
2008	Port Angeles, WA (2) 15’-6” Shaft Drive Clarifier OEM Account
2008	Sunnymede, AR (1) 22’ Diameter Clarifier OEM Account
2008	Fort Thomas, KY (1) 30’ Shaft Drive Thickener
2008	Pemex, MX (2) 130’ Secondary Clarifiers
2008	Concordia, KS (1) 55’ Secondary Clarifier
2008	Freemont Hills (2) 27’ Shaft Drive Secondary Clarifiers
2008	AMDRI (2) 20.7’ Settling Tank Scraper Assemblies OEM Account
2008	Thyssen Krupp (2) 45’ Shaft Drive Thickener (2) 60’ Suction Header Clarifiers
2008	Duke - Cliffside (1) 30’ Shaft Drive Clarifier w/ lift OEM Account

Installation List

PO Year Job Name/Location/Equipment type

2008 Sandy Creek Power Plant
(2) 80’ Solids Contact Clarifiers
(1) 50’ Thickener
OEM Account

2008 Deer Valley WWTP
(4) 31.5’ Clarifiers

2008 Washington Aqueduct, MA
(4) 105’ Thickeners
Engineer: Army Corps of Engineers

2008 Parker, CO
(2) 13.3’ Square Shaft Drive Clarifier
(1) 29.5’ Square Shaft Drive Clarifier
OEM Account

2009 BPCM Malaysia
(1) 26’ Shaft Drive Clarifier
OEM Account

2009 Indianapolis - TW Moses
(2) 25’ Square Shaft Drive Clarifiers
OEM Account

2009 Guthrie, OK
(2) 14’ Square Shaft Drive Clarifiers

2009 Webster, MA
(1) 17’ Square Shaft Drive Clarifier
OEM Account

2009 St. Joseph, MO
(1) 120’ Primary Clarifiers – Spiral Blade
Engineer: The City of St. Joseph

2009 Pemex, MX
(2) 105’ Secondary Clarifiers – Spiral Blade

2009 Newark, OH
(2) 17’ Square Shaft Drive Clarifiers
OEM Account

Installation List

PO Year	Job Name/Location/Equipment type
2009	Pesqueria, MX (2) 70’ Suction Header Clarifiers
2009	Norte, MX (5) 190’ Secondary Clarifiers – Spiral Blade
2009	Blackwell, OK (1) 60’ Primary Clarifier
2009	Seminole City, FL (2) 17.5’ Square Shaft Drive Clarifiers OEM Account
2009	Fields Point, RI (4) 120’ Primary Clarifiers – Spiral Blade (6) 125’ Secondary Clarifiers – Suction Pipe (3) 65’ Thickeners Engineer: CH2M Hill/SEA Contractor: Daniel O’ Connel & Sons
2009	Wichita, KS (1) 160’ Steel Launder System
2009	Westborough, MA (2) 26’ Square Shaft Drive Clarifiers OEM Account
2009	Vera Cruz, MX (2) 140’ Secondary Clarifiers – Spiral Blade
2009	Merrimack Station (2) 14’ Solids Contact Clarifiers OEM Account
2009	Fort Peck, MT (2) 20’ Square Shaft Drive Clarifiers OEM Account
2009	Jaffrey, NH (2) 11’ Square Shaft Drive Clarifiers OEM Account

Installation List

PO Year	Job Name/Location/Equipment type
2009	Las Marias, PR (1) 70’ Thickener
2010	Plymouth, NH (1) 35’ Gravity Thickener Engineer: Wright – Pierce
2010	Amalgamated Clarifier Mod (1) Retrofit Feedwell and EDI
2010	Rockton, IL (1) 30’ Shaft Drive Clarifier
2010	Niagara Falls, NY (1) 70’ Cage Drive Thickener
2010	Longview, WA (1) FRP Weirs & Baffles
2010	New Milford, CT (4) 45’ Secondary Clarifiers Engineer: CDM
2010	Rattlesnake, OH (1) 33’ Spiral Blade Clarifier
2010	Irvine Ranch, CA (1) 28’ Square Shaft Drive Clarifiers OEM Account
2010	Pemex, Monterrey, MX (1) 105’ Primary Clarifier – Spiral Blade
2010	Arkansas, KS (1) 50’ Primary Clarifier
2010	Langley Gulch LHPS (1) 96” dia. Coagulation Tank (1) 94” radius Flocculation Tank (1) 240” dia. Sedimentation Tank OEM Account

Installation List

PO Year	Job Name/Location/Equipment type
2010	Cadereyta, MX (2) 70’ Suction Header Clarifier
2010	St. Joseph, MO (2) 160’ Secondary Clarifiers – Suction Pipe Engineer: The City of St. Joseph
2010	Russky Island Clarifier, Vladivostok, Russia (2) 56’ Primary Clarifiers
2010	Blue Springs, MO (2) 125’ Suction Header Clarifiers Engineer: HDR Archer
2010	Wilson Creek, TX (1) 31.22’ Square Shaft Drive Clarifier OEM Account
2010	Leominster, MA (2) 20’ Square Shaft Drive Clarifiers OEM Account
2010	Heber Valley, UT (1) 55’ Primary Clarifier – Spiral Blade (2) 60’ Secondary Clarifiers – Spiral Blade Engineer: AQUA Engineering
2011	High Sierra Water Services, CO (3) 20’ Solids Contact Clarifiers OEM Account
2011	Gelena, MO (1) 29’ Shaft Drive Secondary Clarifier Engineer: Great River Engineering
2011	Hill Air Force Base (1) 46’ Shaft Drive Clarifier/Tank/Erection Engineer: CH2M Hill
2011	Bustamante WWTP, Mexico (1) 30’ Suction Header Clarifier

Installation List

PO Year Job Name/Location/Equipment type

2011 Pemex, Mexico
(2) 24.5 M Secondary Clarifiers – Spiral Blade

2011 Acapantzingo Cuernavaca, Mexico
(4) 21 M Cage Drive Primary Clarifiers
(2) 38 M Secondary Clarifiers – Spiral Blade
(1) 21 M Cage Drive Thickener

2011 Barrick Cortez
(1) 35’ Clarifier/Elevated Tank/Sludge Handling
Design/Erection

2011 PXP, California
(1) 35’ Thickener
OEM Account

2011 Tulsa, OK
(2) 155’ Primary Clarifiers
Engineer: City of Tulsa

2011 Celeya, MX
(2) 157’ Secondary Clarifiers - Spiral Blade

2011 Tulsa Northside, OK
(2) 50’ Thickeners
Engineer: City of Tulsa

2011 Anacortes, WA
(2) 36.25’ Square Clarifiers
OEM Account

2011 KCMO Birmingham, MO
(2) 113’ Secondary Clarifiers
Engineer: Tetra Tech

2011 Middle Big Creek, MO
(2) 75’ Suction Header Clarifiers
Engineer: HDR Engineering

2011 Manchester, CT
(2) 20’ Mechanisms
OEM Account

Installation List

PO Year	Job Name/Location/Equipment type
2011	Sembcorp, Singapore (2) 27 M Clarifiers
2012	Rhodia, Inc., Vernon, TX (1) 65’ diameter Clarifier upgrade Direct Bid to Client
2012	Homer City (1) 28’ Diameter Gravity Thickener OEM Account
2012	Pohnpei STP, Micronesia (2) 16 M Clarifiers Engineer: Laurie Curran Water PTY, Ltd.
2012	Consol Energy, WV (1) 70’ Thickener Engineer: Chester Engineers
2012	Fishing River, MO (2) 65’ Secondary Clarifiers Engineer: Burns & McDonnell
2012	Stamford, CT (2) 130’ Diameter Spiral Blade Secondary Clarifiers (3) 50’ Diameter Gravity Thickeners Engineer: City of Stamford
2012	Berlin, NH (2) 65’ Diameter Primary Clarifiers (3) 70’ Diameter Secondary Clarifiers (2) 20’ Diameter Gravity Thickeners Engineer: Wright – Pierce
2012	Midori Removables (1) Clarifier – Pilot skid
2012	First Energy (1) 75’ Diameter Flocculating Clarifier (Replacement and upgrade) Direct Bid to First Energy

Installation List

PO Year Job Name/Location/Equipment type

2012 Rock Creek
(2) 20'-5" Clarifiers
OEM Client

2012 Moore's Bridges WTP
(2) 65' Diameter Gravity Thickeners
Engineer: Whitman, ReQuardt, & Associates

2012 Tulsa WPC 12-3
(2) 155' Diameter Primary Clarifiers
Engineer: City of Tulsa

2012 Smithfield, RI
(2) 14' Diameter Shaft Drive Clarifiers
OEM Client

2012 Niagara Falls, NY
(1) 70' diameter Thickener retrofit
Engineer: CRA Infrastructure & Engineering

2012 Burley, ID
(1) 80' diameter Suction Pipe Clarifier
Engineer: Forsgren Associates, Inc.

2012 Dry Creek WWTP, Roseville, CA
(4) 85' diameter Suction Header Clarifiers
Engineer: WaterWorks Engineers

2012 Sacramento Regional WWTP
(1) 130' diameter Suction Header Clarifier Retrofit
Engineer: Sacramento Regional

2012 Carrolton, MO
(1) 45' diameter Suction Header Clarifier
Engineer: HDR Engineering, Inc.

2012 Spring River WTP, Columbus, Kansas
(2) 42' diameter Solids Contact Clarifiers

2012 Independence, MO
(8) 65' Suction Header Clarifiers
Engineer: HDR Engineering
Contractor: Whiting-Turner Contracting

Installation List

PO Year Job Name/Location/Equipment type

2012 Al-Jubail, Saudi Arabia
(1) 11.5 M diameter Shaft Drive Clarifier and Tank
Client: Moritani America – Sadara MFC
Tsukishima Kankyo Engineering, Ltd,

2012 Southern Power - Plant Daniels
(2) 20’ Diameter Solids Contact Clarifiers
(2) 20’ diameter FRP tanks
(4) 10’ diameter FRP Tanks, Mixers and Supports
(2) 8’ diameter FRP Tanks, Mixers and Supports
(1) 14’ diameter FRP Sludge Mix Tank, Mixer and Supports
On-site Erection of SCC Tanks and Mechanisms
Engineer: Aquatech International

2013 Atlatec DAF, Monterrey, Mexico
(1) 1 M diameter DAF skid
OEM Client

2013 Ambatovy Mining, Madagascar
80M Thickener Upgrades
OEM Client

2013 Rhodia (Solvay), Baton Rouge, LA
(2) 60’ Suction Pipe Clarifiers
Owner Installed

2013 Paw Paw Lake Area WWTP, Michigan
(1) 30’ Thickener
Engineer: Jones and Henry Engineers
Contractor: DHE Plumbing and Mechanical

2013 Gonvick WWTF, MN
(1) 18’ Shaft Drive Clarifier
Engineer: Wench Associates
Contractor: KHC Construction Inc.

2013 Hot Springs Village WTP Expansion
(2) 45’ Diameter SCC Shaft and rake Rehab
OEM Client
Engineer: Crist Engineers

Installation List

PO Year Job Name/Location/Equipment type

2013 Shenango, Inc., Pittsburg, PA
(1) 16’ DAF Mechanism, Pressure System, Elevated Steel Tank, Installation
Engineer: JNE Consulting

2013 Macon, GA
(2) 70’ diameter Suction Pipe Clarifiers
Engineer: City of Macon Water Authority

2013 Mt. Pleasant WWTP, MI
(2) 85’ Spiral Blade Final Clarifiers
Engineer: Jones and Henry Engineers, LTD
Contractor: Gerace Construction Company, Inc.

2013 Jack Link’s, Alpena Plant, Alpena, SD
(1) 17’ Segmented Blade Clarifier
Engineer: Banner Engineers

2013 Great Falls WWTP, Great Fall, Montana
(1) 104’ Square Suction Pipe Clarifier
Engineer: HDR Engineering
Contractor: Swank Enterprises

2013 Ethydco, Egypt
(1) 10M Solids Contact Clarifier
(1) 8M Thickener
Engineer: Aquatech International

2013 Denmark, Australia
(1) 12M Suction Header Clarifier
Engineer: Water Corporation

2013 Clinton WWTP, Clinton, OK
(1) 55’ Suction Header Clarifier
Engineer: City of Clinton
Contractor: Wynn Construction Co., Oklahoma City, OK

2013 Clark County WWTP, Medway, Ohio
(1) 60’ Spiral Blade Clarifier
Engineer: O’Brien & Gere
Contractor: Peterson Construction Co.

Installation List

PO Year Job Name/Location/Equipment type

2013 Seminole, OK
(2) 75’ Suction Pipe Clarifiers
Contractor: Sharp Iron group – BW Fabricators, Wichita Falls, TX

2013 Barstow, CA
(1) 22’ Gravity Thickener
Engineer: Carollo Engineers
Contractor: Kana Engineering Group, Inc., Rancho Cucamonga, CA

2013 Lake Oswego, OR AFS
(2) 24’-9” Shaft Drive Clarifiers
OEM Client

2013 Richmond County, Rockingham, NC
(1) 58’ Thickener
Engineer: Municipal Engineering Services
Contractor: Eberhart Construction, Inc, Willow Spring, NC

2013 New Haven, CT
(8) 100’ Square Suction Pipe Clarifiers
(2) 60’ Thickeners
Engineer: CH2M Hill
Contractor: Nickerson General Contractors, Torrington, Connecticut

2013 Dublin Road WTP – City of Columbus, OH
(4) 105’ Clarifiers w/ Corner Sweep Mechanism
Engineer: CDM Smith
Contractor: Kokosing Construction Co., Columbus, Ohio

2013 Pyrite Canyon Treatment Facility
(2) 22’ Flocculating Clarifiers w/ Elevated Tank
Contractor: CW Roen Construction Company
Engineer: Tetra Tech

2013 HVUD, TN
(1) 39’ Shaft Drive Clarifier
OEM Client

2013 Gladstone WWTP Nassau, Bahamas
(2) 57’ Suction Header Clarifiers
Contractor: NID / Emerene Co., LTD Joint Venture, Nassau, Bahamas

Installation List

PO Year Job Name/Location/Equipment type

2013 Ethydco, Egypt
(1) 7.2 M Shaft Drive Secondary Clarifier
(1) Rectangular DAF, 3.2 M x 2.2 M
Engineer: Aquatech Engineering

2013 Cox Creek WRF
(2) 42’ Thickeners
OEM Client

2013 Cox Creek, WWTP
(1) 20’-7” Square Shaft Drive Clarifier
OEM Client

2013 Parkway WWTP, Laurel, Maryland
(2) 40’ Gravity Thickeners
Engineer: CH2M Hill
Contractor: CPP Construction

2014 Spencer, MA
(1) 60' dia. Suction Pipe Clarifier
Engineer: Wright – Pierce

2014 Chevron Phillips Baytown
(1) 32' dia. Shaft Drive Clarifier

2014 Ballarat South, Australia
(1) 42M Suction Header Clarifier
Engineer: MWH

2014 Westville, IN
(2) 35' dia. Suction Header Clarifiers
Engineer: McMahon Engineers

2014 Sacramento Regional WWTP
(5) 130’ diameter Suction Header Clarifier Retrofits
Engineer: Sacramento Regional
Contractor: Auburn Construction

2014 Fremont, OH
(3) 90’ dia. Suction Header Clarifiers
Contractor: MWH Constructors

Installation List

PO Year	Job Name/Location/Equipment type
2014	Ste. Agathe, Ontario, Canada (2) 19.5 M Suction Header Clarifiers Engineer: Genivar/Dessua
2014	Cranston, RI (2) 24' Square x 18' Scraper Clarifier Mechanism OEM Client
2014	Rock Creek, OR (4) 51' dia. Gravity Thickeners Engineer: Carollo
2014	Iowa Fertilizer Co. – Nonprocess OSBL Facility (3) 70' Solids Contact Clarifiers w/ Steel Tanks (2) 60' Gravity Thickeners w/ Tanks (1) 26' Storage Tank Engineer: Aquatech International
2014	St. Joseph, MO (1) 160' dia. Suction Pipe Clarifier Engineer: HDR
2014	Westville, IN (2) 35' dia. Suction Header Clarifiers Engineer: McMAHON
2014	Forrest, IL (1) 33'-6" dia. Shaft Drive Clarifier Engineer: Farnsworth Group
2014	Mukhazina, Oman (1) 82' Solids Contact Clarifier Engineer: Aquatech International
2014	Palo Alto, CA (1) 120' dia. Suction Pipe Clarifier Engineer: City of Palo Alto
2014	Rockville, MD (1) 57' dia. Gravity Thickener Engineer: Hazen & Sawyer

Installation List

PO Year Job Name/Location/Equipment type

2014 Delta Diablo WWTP, CA
(3) 70’ Diameter, Scum Removal Equipment

2014 City of Tulsa, OK
(3) 16’ x 76’ Rectangular DAF’s
Engineer: Black & Veatch

2014 Warwick, RI
(2) 17.33' Square X 16.9' SWD Mechanisms
OEM Client

2014 West Warwick, RI
(2) 17.33’ x 17.33’ Scraper Mechanisms
OEM Client

2014 Clinton, AR
(1) 15’-10” x 15’-10” Scraper Mechanisms
OEM Client

2014 West Warwick, RI
(2) 17.33’ x 17.33’ Scraper Mechanisms
OEM Client

2014 Loudoun Water WTP
(2) 45’ Gravity Thickeners
Engineer: CDM Smith
Contractor: PC Construction

2014 Hyperion, CA
Sixteen (16) 150' Dia. x 12' Side Water Depth Clarifier Mechanism Components
Designed for Installation in Existing Concrete Tanks.
Engineer: City of Los Angeles Dept. of Public Works

2014 Blue Plains
(3) 34’-3” dia. Square Shaft Drive Clarifiers
OEM Client

2015 Terre Haute, IN
(1) 17’ Square x 17’ SWD Mechanisms
OEM Client

Installation List

PO Year	Job Name/Location/Equipment type
2015	James Hardie McCarran, NV (1) 30’ dia. Clarifier/Fluidizer
2015	Timber Lake, OR (1) 16’ dia. Shaft Drive Clarifier
2015	Duke Energy Carolinas (1) 30’ dia. Gravity Thickener Engineer: Veolia
2015	Weno Chuuk (1) 40’-6” dia. Clarifier Engineer: Laurie Curran Water Pty, Ltd.
2015	Gualala, CA (1) 24’ dia. Shaft Drive Clarifier
2015	Woonsocket, RI (3) 110’ dia. Suction Pipe Clarifiers Engineer: CH2M Hill
2015	Northern Kentucky Water District (2) 89’-5” Square Clarifier Mechanisms Engineer: HDR, Inc. Contractor: Building Crafts
2015	Lawrence, KS (2) 110’ Suction Pipe Clarifiers Engineer: Black and Veatch
2015	New Orleans – West Bank Plant (1) 120’ dia. Primary Clarifier Contractor: Cole Construction Company Inc.
2015	Paw Paw Lake WWTP (1) 80’ dia. Spiral Blade Primary Clarifier Engineer: Jones & Henry Engineers, Ltd. Contractor: Gerace Construction Company, Inc.
2015	Iowa Fertilizer Co. – Nonprocess OSBL Facility (3) 70’ dia. Aluminum Covers for Solids Contact Clarifiers w/ Steel Tanks (2) 60’ dia. Aluminum Covers for Gravity Thickeners w/ Tanks Engineer: Aquatech International

Installation List

PO Year Job Name/Location/Equipment type

2015 City of Titusville – Mourning Dove WTP
(1) 34' dia. Gravity Thickener
(1) 53.5' dia. Solids Contact Clarifier
Engineer: Reiss Engineering

2015 City of Hayward, CA – WPCF Improvements
(1) 80' dia. Primary Clarifier
Engineer: Brown and Caldwell

2015 City of Lakewood, Ohio
(2) 75' dia. Suction Header Clarifier Headers
Engineer: City of Lakewood, Ohio

2015 Union County, AR
(1) 24' Square Shaft Drive Clarifier
Engineer: OEM Client

2015 Washington Aqueduct
(1) FRP Replacement Feedwell
Contractor: Fasting Enterprises, Inc.

2015 Fire Camp 8
(1) 14' dia. Primary Clarifier
(1) 10' dia. Secondary Clarifier
Engineer: PACE Water
Contractor: Integrated Water Services, Inc.

2015 Tallulah, LA
(1) 70' Diameter Clarifier
Engineer: Denmon Engineering

2016 Frontier Water
(1) 10' Diameter Solids Contact Clarifier

2016 Timet, NV
(1) 16' Diameter Clarifier mechanism with Solids Contact/Flash Mix tank
Engineer: Carollo

2016 City of Martinsville WWTP, Ridgeway, VA
(2) 40' Diameter Chlorine Contact Clarifier

Installation List

PO Year Job Name/Location/Equipment type

2016 Junction City, KS
(2) 70’ Diameter Primary Clarifiers
Engineer: HDR Engineering

2016 Zuazua, MX
(2) 20M Diameter Spiral Blade Clarifiers

2016 Planta Norte, MX
(1) 67.06M (220’-0”) Diameter Suction Header Clarifier

2016 Fields Point, RI
(16) 150’ Diameter Clarifiers
Engineer: LA DWP Engineering

2016 Cranston
(1) 38’ Diameter Gravity Thickener Platform
Engineer: Veolia

2016 Pinole, CA
(3) 45’ Diameter Primary Clarifiers
(2) 65’ Diameter Suction Header Clarifiers
(1) 40’ Diameter Gravity Thickener
Engineer: HDR

2016 Shell Franklin
(1) 52’ Diameter Raw Water Gravity Thickener
Engineer: Veolia

2016 Johnson City, TN
(1) 80’ Diameter Suction Pipe Clarifier
Client: Jeff Corder

2016 Bellows Falls, VT
(2) 40’ Diameter Primary Clarifiers
(2) 40’ Diameter Secondary Clarifiers
Engineer: Aldrich & Elliott

2016 Frontier Water Systems, CA
(1) 10’ Diameter Solids Contact Clarifier
Client: Frontier Water Systems

Installation List

PO Year	Job Name/Location/Equipment type
2016	Avon Lake, OH (3) 70’ Diameter Spiral Blade Secondary Clarifiers (1) 76’ Diameter Spiral Blade Final Clarifier (1) 80’ Alum Gravity Thickener Engineer: CDM Smith
2016	New Orleans – East Bank (1) 164’ Suction Pipe Clarifier Client: NOLA
2016	Muswellbrook, AU (1) 17.37M Diameter Solids Contact Clarifier Engineer: GHD
2016	City of Manchester, NH (3) 130’ Diameter Primary Clarifiers (3) 50’ Diameter Gravity Thickeners
2016	South Lake Tahoe (1) 100’ Diameter Primary Clarifier Engineer: HDR
2016	Muswellbrook, AU (1) 17.37M Diameter Solids Contact Clarifier Engineer: GHD
2016	Rantoul, KS (1) 45’ Diameter Solids Contact Clarifier Design Build: Garney Construction
2016	Mesa, AZ (2) 22’ Sq. Shaft Clarifier Engineer: Kruger
2017	City of Peshtigo (1) 40’ Diameter Gravity Thickener Engineer: Robert E Lee & Associates
2017	UOSA, VA (3) 125’ Diameter Primary Clarifiers (3) 40’ Diameter Gravity Thickeners (1) 75’ Diameter Gravity Thickener Engineer: CH2M Hill

Installation List

PO Year Job Name/Location/Equipment type

2017 Western Treatment Plant – Melbourne, AU
(4) 45M Diameter Spiral Blade Secondary Clarifiers
Engineer: JACOBS

2017 Village of Layfayette, OH
(2) 20’ Shaft Drive Clarifiers
Engineer: Poggemeyer Design Group, Inc.

2017 Town of Newmarket, NH
(2) 35j’ Diameter Primary Clarifiers
Engineer: Wright - Pierce

2017 Bass Lake WWTP, CA
(2) 28’ Diameter Suction Header Clarifiers
(2) Knock Down Tanks
(2) Sets Tank Partitions
Engineer: Carollo

2017 Frito Lay WWTP, MD
(1) 33.77’ Diameter Spiral Blade Clarifier
Engineer: Pharmer Engineering

2017 Duke Energy Plant Rogers, Mooresboro, NC
(2) 45’ Diameter Thickeners
Engineer: Burns & McDonnell

2017 Struthers WWTP, Struthers, OH
(2) 62’ Diameter Primary Clarifiers
Engineer: MS Consultants, Inc.

2017 City of Concordia, KS
(1) 55’ Diameter Secondary Clarifier
Engineer: Professional Engineering Consultants, P.A.

2017 City of Potterville WWTF, Potterville, MI
One (1) 85’ Diameter Primary Clarifier
One (1) Set FRP Weirs, Troughs, and Scum Baffles
Engineer: Williams & Works

2017 City of Branson, MO
(2) 80’ Diameter Suction Header Clarifiers
Engineer: Black & Veatch

Installation List

PO Year	Job Name/Location/Equipment type
2017	Melbourne Water Nutrient Removal Plant, Australia (4) 45M Diameter Spiral Blade Secondary Clarifiers Engineer: CPB / UGL / Jacobs
2017	Edmonton WWTP, Alberta Canada (1) 30M Diameter Rim Drive Spiral Clarifier Engineer: Jacobs Group
2017	Priest River WRRF, Priest River, ID (2) 30’ Diameter Spiral Blade Clarifiers Engineer: Mountain Waterworks
2017	James Hardie Building Products, Tacoma, WA (1) 30’ Diameter Clarifier Engineer: None
2017	James Hardie Building Products, Mission Viejo, CA (1) 30’ Diameter Clarifier Engineer: None
2017	City of Gulf Shores, Gulf Shores, AL (2) 75’ Diameter Suction Header Clarifiers Engineer: McMillan Engineering Services
2017	Milford, MA (2) 28’ Diameter Gravity Thickeners Engineer: Tata & Howard
2017	Village of Denmark, WI - DBS (2) 30’ Diameter Clarifiers Engineer: None
2017	Clear Lake Oaks WWTP, CA (1) 65’ Diameter Spiral Blade Secondary Clarifier Engineer: MC-Engineering
2017	Kubota Financial Center (1) 28’ Package Plant Engineer: MindWater, Inc.
2017	Tin Can Hollow WTP, Jefferson, PA (2) Suction Troughs Sludge Removal Equipment Engineer: Rice Water Services

Installation List

PO Year	Job Name/Location/Equipment type
2017	City of Palo Alto, CA. (1) 120’ Square Suction Pipe Clarifier (1) 120’ Diameter Suction Header Clarifier Engineer: Jenks & Adamson
2017	Southern Company Plant Bowen: Cartersville, GA (2) 38’ Diameter Solids Contact Clarifiers Engineer: Veolia
2017	Hickory Run Energy Station, North Beaver Township, PA (1) 50’ Diameter Thickener Mechanism Engineer: Veolia
2017	Domtar Paper Company LLC. Rothschild, WI (1) 120’ Clarifier Study Engineer: None
2017	Seminole WWTP, Seminole, OK (1) 75” Suction Pipe Clarifier Engineer: ABT
2017	Suisun-Solano Water Authority, Vacaville, CA Cement Hill Water Treatment Plant (1) 72’ Diameter Solids Contact Clarifier Engineer: Direct Bid
2017	Southeastern Berrien County Landfill WWTP, Niles, MI (1) ClearFlo Sequencing Batch Reactor Complete Systems Engineer: Gosling Czubak Engineering Services, Inc.
2017	Shire of East Pilbara Newman WWTP, Australia (1) 18.3M Diameter Rim Drive Suction Header Clarifier Engineer: None
2018	Struthers Ohio WTP Struthers OH (3) 37.5’ Diameter Solids Contact Clarifiers Engineer: AQUA
2018	Lenoir WTP, Granite Falls, NC (2) 17’-6” Square Thickener Mechanisms Engineer: Kruger

Installation List

PO Year	Job Name/Location/Equipment type
2018	Paw Paw Lake Regional Joint Sewage Disposal Board (2) 60’ Diameter Spiral Blade Clarifiers Engineer: Jones & Henry Engineers, Ltd.
2018	Marine Harvest, Kyleakin Scotland (1) 6.5M Diameter Secondary Clarifier Engineer: Wastewater Technologies, LLC
2018	Domtar Paper Company, LLC. Roghschild, WI (1) 120’ Primary Scraper Blade Clarifier Engineer: None
2018	Village of New Lexington WWTP; New Lexington, OH (2) 46’ Spiral Blade Clarifiers Engineer: Poggemeyer Design Group, Inc.
2018	St. Charles, LA (1) 20.7’ Diameter Thickener Engineer: Veolia
2018	Cooper Creek WWTF; Branson, MO (2) 80’ Suction Header Clarifier Engineer: Burns & McDonnell
2018	Advance Disposal Landfill; Newburg, PA (1) 36’-4 3/8” Diameter Thickener Mechanism (1) lot Field Installation
2018	Haikey Creek WWTP; Broken Arrow, OK (2) 60’ Diameter Thickener Mechanisms Engineer: None
2018	Little Rock Adams Field WRF, Little Rock, AR (3) 145’ Diameter Spiral Blade Secondary Clarifiers Engineer: Black & Veatch and Hawkins Weir Joint Project
2018	Effluent Treatment Plant; New Glasgow Canada (1) 56M Diameter Primary Scraper Clarifier (2) 56M Diameter Secondary Suction Header Clarifiers Engineer: Veolia

Installation List

PO Year	Job Name/Location/Equipment type
2018	East Bank WWTP Clarifier #8; New Orleans, LA. (1) 164’ Diameter Secondary Suction Pipe Clarifier Engineer: None
2018	Pequannock Newark NJ (1) 40’ Diameter Shaft Drive Thickener (1) 40’ Diameter Steel Knock Down Tank Engineer: Hatch Mott MacDonald
2018	James Hardie JH Building Products Sparks, NV (1) Clarifier Rake Mechanism Engineer: None
2018	FRC / JWC Environmental, LLC. Jamaica (1) 34’ Diameter Shaft Drive Clarifier Mechanism Engineer: None, OEM Account
2018	Gardner, MA. WWTF (2) 25’ Diameter Shaft Drive Gravity Thickeners Engineer: Wright-Pierce
2018	Rialto WWTP, Rialto, CA. (1) 95’ Primary Spiral Blade Clarifier (1) 100’ Secondary Spiral Blade Clarifier Engineer: AECOM / W.M. Lyles Co. Joint Venture
2018	Northern Adelaide Irrigation Systems, Adelaide, Australia (1) 9M Diameter Thickener Mechanism (1) 11M Mixer Support Walkway and Access Platform Engineer: Liquitek Pty, Ltd.
2018	James Hardie JH Building Products Prattville, AL Plant (1) 30’ Diameter Cone Rake Thickener Engineer: None, OEM Account
2018	City of Albany WWTP Albany, OH (2) 16’ Diameter Shaft Drive Clarifiers Engineer: STANTEC
2018	Southern Company Plant Bowen: Cartersville, GA (1) 38’ Diameter Solids Contact Clarifiers Engineer: Veolia

ClearStream ENVIRONMENTAL

Installation List

PO Year Job Name/Location/Equipment type

2018 Materne North America: Traverse City, MI
(1) ClearFlo SBNR Process Plant
Engineer: Gosling Czubak Engineering Sciences, Inc.

2018 City of Torrington, CT.: Torrington, CT.
(2) 20'-3" Square Thickeners
Engineer: Kruger

2018 City of Lakewood WWTP: Lakewood OH.
(2) 18'-3" Square Thickeners
Engineer: Kruger

2018 City of Lancaster WWTP: Lancaster, OH
(2) 25' Diameter Secondary Clarifiers
Engineer: Burgess & Niple, Inc.

2018 City of Martinsville WWTP, Ridgeway, VA
(2) 40' Diameter Chlorine Contact Clarifier
Engineer: City Direct Purchase

2019 Suisun-Solano Water Authority: Cement Hills WTP, Fairfield, CA
(2) 55' Diameter Solids Contact Clarifiers
Engineer: Kjeldsen, Sinnock, Neudeck, (KSN), Inc.

2019 Pequannock RTF: Gualala, CA
(1) 28' Cage Drive Clarifier
Direct Purchase

2019 Entergy, Lake Charles, LA
(1) 26' Clarifier Mechanism
(1) 26' Knock Down Anchor Channel Tank
Engineer: Veolia

2019 Spectrum Meats – Nelson Carlson Mechanical, Mount Morris, IL.
(1) 30' Suction Header Clarifier Mechanism
Engineer: McMahon Associates, Inc.

2019 Yen Xa, Vietnam
(24) 24m Diameter Scraper Final Clarifiers
Hanoi Department of Construction

Installation List

PO Year	Job Name/Location/Equipment type
2019	Michigan Sugar Company – Croswell, MI. (1) 101.01’ Diameter Flume Water Clarifier Mechanism (1) 101.01 Diameter Bolted Tank (1) Concrete Foundation Design (1) lot Field Installation Engineer: Direct Purchase
2019	Kennebec Sanitary Treatment District, Waterville, ME. (2) 30’ Dia. Gravity Thickeners Engineer: Wright – Pierce
2019	Kruger (Veolia) French Broad WRF, Ashville, NC (2) 24.5’ Square Clarifiers Engineer: CDM Smith
2019	City of Leavenworth, KS Field Repair of Primary Clarifier #3 and Final Clarifier #1 Engineer: None
2019	City of Salina Kansas WTP (2) 40’ SC Lime / Soda Ash Softening Clarifiers Engineer: Burns & McDonnell
2019	Hall Street WWTF Primary Clarifier Upgrade, Concord, NH (2) 95’-0” Primary Clarifiers Engineer: Wright-Pierce
2019	Dutchman’s Creek WWTP, Mocksville, NC (2) 60’-0” Diameter Scraper Clarifiers Engineer: Willis Engineers
2019	Trumbull County / Mosquito Creek WWTP, Warren, OH. (3) 78’-0” Diameter Suction Header Clarifiers (2) 86’-0” Diameter Spiral Blade Clarifiers (1) 44’-0” Diameter Gravity Sludge Thickeners Engineer: CT Consultants
2019	Oxnard WWTP Emergency Repairs, Oxnard, CA. (2) Replacement Walkways for Clarifiers Engineer: AECOM / KEH & Associates

Installation List

PO Year	Job Name/Location/Equipment type
2019	Terre Haute II, IN. (1) 17’ X 17’ Square Clarifier (ACTIFLO) Engineer: Kruger (Veolia)
2019	Icon Water Googong WTP Clarifier System Renewal, Williamsdale, ACD, Australia (4) 27m X 27m X 5m Solids Contact Clarifiers Engineer: JACOBS Australia / Liquitek Pty, Ltd.
2019	Clinton WWTP Clarifier Refurbishment, Clinton, OK (1) 80’-0” Diameter Suction Header Clarifier Engineer: City of Clinton
2019	City of Portsmouth PEASE WWTP, Portsmouth, NH. (2) 40’-0” Diameter Primary Clarifiers Engineer: Stantec
2019	Western Sugar Project, Fort Morgan, CO. (1) 72’-0” Segmented Blade Clarifier and Installation Engineer: Veolia Water Technologies
2019	Bateau Bay WWTP Clarifier Number 3, New South Wales, Australia (1) 24m Diameter Rim Drive Spiral Blade Clarifier Engineer: Central Coast Council / Liquitek Pty, Ltd.
2019	Chrysler, WWTP Detroit, MI (1) 35’ Diameter Flocculating Clarifier and Overflow Launder System (1) 40’ Diameter Flocculating Clarifier (1) 35’ Diameter Gravity Thickener and Elevated Knock Down Tank (1) lot Submersible Mix Systems (2) 55.39’ Diameter bolted Mix Tanks (1) lot Interconnecting Walkways and Stair Tower Engineer: John E Green Co.
2019	Town of Hanover, NH WWTP (2) 45’ Primary Clarifiers Including Demolition and Installation Engineer: Town of Hanover
2019	McKinley Paper, Port Angeles, WA. (1) 80” Drive Unit and Misc. Clarifier Parts Engineer: None

Installation List

PO Year	Job Name/Location/Equipment type
2019	Wallingford, CT WWTP (2) 18’ Square Clarifiers (ACTIFLO) Engineer: Kruger (Veolia)
2019	USS Fairfield Thickener (10) 18’ Thickener Engineer: Veolia
2019	Scotia, CA WWTP (1) 30’ Shaft Drive Primary Clarifier Engineer: None
2019	New Carlisle, OH (1) 35’ Clarifier Engineer: Danis
2019	Muskogee Municipal Authority, Muskogee, OK (2) Secondary Clarifier Drive replacement (1) Gravity Thickener Engineer: Holloway, Updike and Bellen, Inc.
2019	Goodyear, AZ (2) 12’ Square, Shaft Drive Clarifiers Engineer: Kruger (Veolia)
2019	Knightstown, IN Clarifier (1) 46’ Spiral Blade Secondary Clarifier Engineer: Danis
2019	Lower Poplar WWTP, Macon, GA (2) 110’ Diameter Primary Clarifiers (3) Secondary 150’ Clarifiers (1) 70’ Thickener (2) 50’ Thickeners Engineer: None

TORQUE TEST PROCEDURE

ClearStream Environmental, Inc
9547 South 500 West, Sandy, UT 84070
801.676.1890 Phone │ 801.676.1893 Fax

Static Torque Test Procedure

Rev 0

Equipment Needed:
Soft straps
Two (2) Come-a-longs
Anchor Bolt(s)
Crescent Wrench
Dynamometer (minimum one)
Continuity tester

Purpose

The torque test serves 3 purposes.

1. Verify that the alarm and cutoff torque contacts are set at the correct torque settings and that the local control panel correctly alarms and shuts off the drive unit

2. Verify that the drive unit torque gauge is reading accurately

3. Verify that that the mechanism can withstand the tested torque values.

Test Procedure:

1. To verify that the local control panel is correctly connected to the drive unit, connect a crescent wrench to the drive unit. Apply force to the wrench to simulate a torque and using the continuity tester, verify that the alarm and torque contacts are correctly working. If the drive unit is a hydraulic drive, use the test valve to simulate a torque while the motor is running.
2. Turn the power to the mechanism on so that the mechanism begins to rotate. As the mechanism rotates, apply force to the wrench, or use the test valve, and simulate a torque that is higher than the cutout torque.
3. Verify that the mechanism shuts off once the cutoff torque is reached. Mechanism should not restart until the control panel is reset.
4. Inspect the clarifier mechanism and locate a structurally sound point along a rake arm, a structurally sound point will be at a joint between 2-3 steel members. Identify the same location on the opposite rake arm. These are the locations where the slings will connect to the rake arms. It is best to place the sling at a structural joint. Measure and record the distance from the chosen point to the center of the tank (Dimension A on diagram)
5. Layout the come-a-longs, dynamometer, and slings at the bottom of the tank. For each rake arm, attach one end of the strap to the rake arm. Attach the other end of the strap to the dynamometer (testing may be done with a single dynamometer). Attach the other end of the dynamometer to the Come-a-long. Repeat the setup procedure for the opposite rake arm. If testing a single arm, or if only one arm is available, Only setup equipment on one arm.
6. Measure the distance from the rake arm connection point to a point on the tank floor perpendicular to the arm (dimension B in the diagram). This will be the anchor location. Repeat

for the opposite arm. If only one dynamometer is used, add the length of the dynamometer to the arm opposite the dynamometer.

7. Verify that measurements A and B are identical for each arm.
8. To determine the anchor bolt loading, divide the cutoff torque in half, (Do not divide if only testing a single arm) and then divide the result by the distance "A" recorded in step 4. This will provide the load that the anchor bolt will see at the alarm/cutoff test settings. Use the calculated load to determine the anchor bolt size/embedment and the size and method of attaching the slings.
9. Set anchor(s) in the location(s) from step 6. Connect the come-a-long to the anchor and secure so that the com-a-long will not come off the anchor during testing.
10. Use the come-a-longs to set equal tension in the straps on both rake arms.
11. Start the drive unit and let the drive unit run to cut-off. When the mechanism has cutoff, record the maximum force as registered by the dynamometer.
12. Repeat the previous step and obtain multiple readings.
13. Once testing is completed, and load has been removed from the mechanism (slings should be slack), disconnect the slings, Dynamometer(s) and come-a-longs from the rake arms.
14. Cut the cylinder anchor bolts flush with the floor.

Complete all calculations and fill out the torque test data sheet.

ClearStream ENVIRONMENTAL

STATIC TORQUE TEST DATA SHEET – STATIC TEST

Job Number:	
Job Name:	
Testing Location:	
Witness:	
Test Date:	

Alarm Switches activates at correct value?		Cutoff Switch activates at correct value?		
Mechanism Shuts Down at cutoff Value?				

Distance from Center of Tank to Strap Attachment Point (Measurement B)		FT	
Distance from Rake Arm to Anchor Point (Measurement B):		FT	
Vertical Distance from Cylinder anchor to strap attachment:		FT	

	Expected Torque (FT*LBS)	Expected Dynamometer Force (LBS)	
Drive Alarm Torque:			
Drive Cutoff Torque:			
Shear Pin Torque: (If applicable):			
Force Per Anchor (2 Arm Restraint) = Torque/2/Measurement A			**Do Not Exceed Anchor or Strap Capacity**
Force Per Anchor (1 arm Restraint)=Torque/Measurement A			

	Force on Dynamometer		Torque Calculated		Torque (Observed at Drive Gauge)		Difference
Test 1							
Test 2							
Test 3							
Test 4							
Test 5							
Test 6							
Test 7							
Test 8							
Test 9							
Test 10							

Notes:	

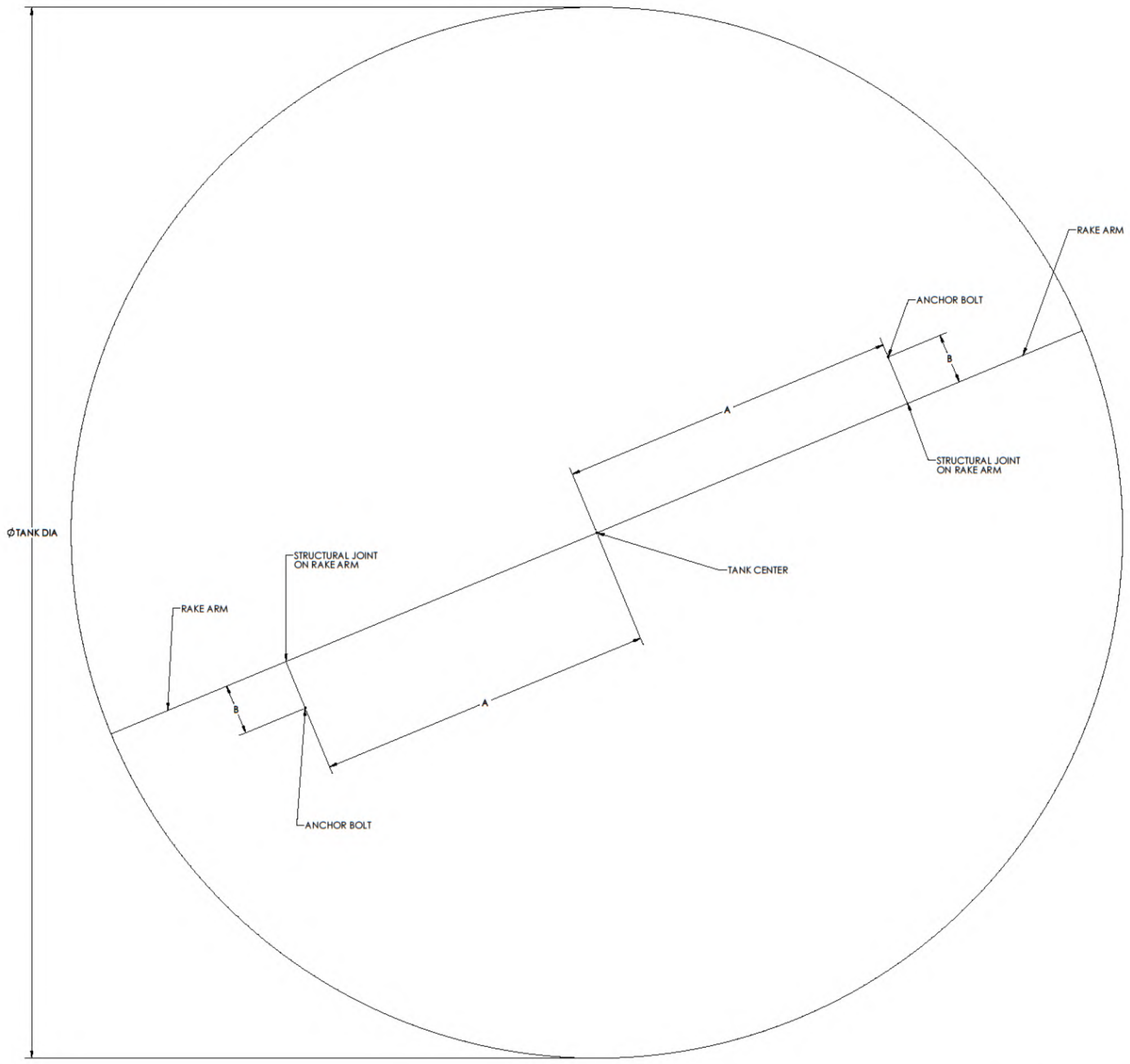

REV.	DESCRIPTION	DRAWN	APPROV.	DATE
0	INITIAL RELEASE	TLK	TLK	5/12

9547 SOUTH 500 WEST
SANDY, UT 84070
OFFICE: (801) 676-1890
FAX: (801) 676-1893

PROPRIETARY AND CONFIDENTIAL

THE INFORMATION CONTAINED IN THIS DRAWING IS THE SOLE PROPERTY OF CLEARSTREAM ENVIRONMENTAL. ANY REPRODUCTION IN PART OR AS A WHOLE WITHOUT THE WRITTEN PERMISSION OF CLEARSTREAM ENVIRONMENTAL IS PROHIBITED.

UNLESS OTHERWISE SPECIFIED:
DIMENSIONS ARE IN INCHES
WEIGHTS ARE IN LBS
TOLERANCES (I.A.W. AWS D1.1, AISC CODE OF STD PRACTICE):
FRACTIONAL ±1/8"
HOLE LOCATION: ±1/32"

MATERIAL: N/A
WEIGHT EACH: N/A
NUMBER OF MECHANISMS: 2
TOTAL WEIGHT: N/A

	NAME	DATE
DRAWN	TLK	5/12
CHECKED	MJD	5/12
ENG APPR.	TLK	5/12
FAB INSP.		

DO NOT SCALE DRAWING
MODEL NUMBER:
DESIGNATION:

TORQUE TEST

TITLE:
TORQUE TEST DIAGRAM

SIZE D
DWG. / PART NO. 98
REV

SCALE: 1:80
SHEET 1 OF 1

CAGE DRIVE FIELD INSPECTION REPORT

CSE Job #: ____________
Customer Reference #: ____________
Date: ____________

9090 South 300 West
Sandy, Utah 84070

Office: 801.676.1890
Fax: 801.676.1893

CAGE DRIVE FIELD INSPECTION REPORT

PROJECT: ____________
LOCATION: ____________
CONTRACTOR: ____________
CONTACT: ____________
PHONE # ____________
PLANT CONTACT: ____________
PHONE #: ____________
EQUIPMENT: ____________

START-UP CHECK LIST:

DRIVE UNIT

POWER TO MOTOR ____________
TORQUE SWITCH(ES) WORKING ____________
OIL/GREASE LUBRICATED ____________
MOTOR ROTATION CHECK ____________

DRIVE LIFT (IF APPLICABLE)

POWER TO MOTOR N/A
OIL LEVEL/TEMP SWITHCHES ____________
HYDRAULIC FLUID FILLED ____________
MOTOR ROTATION CHECK ____________
UPPER LIMIT SWITCH SET IN RIGHT POSITION AND OPERATING ____________
LOWER LIMIT SWITCH SET IN RIGHT POSITION AND OPERATING ____________
LIFT OPERATES AT CORRECT TORQUE SETTING ____________
LIFT LOWERS AT CORRECT TORQUE SETTING/TIME FRAME ____________

CONTROL PANEL CHECK OUT

START ____________
HORN SILENCE ____________
TORQUE ALARM ____________
STOP ____________
RESTART ____________
TORQUE SHUT OFF ____________
ALARM ____________
HORN ____________

DRIVE CAGE

PLUMB ____________

RAKE ARMS

MECHANISM LEVEL (See attached Leveling Procedure and Tolerances)

Measurements	ARM 1		ARM 2 (IF APPLICABLE)	
	0		0	
	90		90	
	180		180	
	270		270	
	DIFFERENCE		DIFFERENCE	

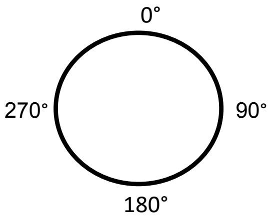

ALLOWABLE TOLERANCE ____________

CSE Job #: ____________________
Customer Reference #: ____________________
Date: ____________________

9090 South 300 West
Sandy, Utah 84070

Office: 801.676.1890
Fax: 801.676.1893

CAGE DRIVE FIELD INSPECTION REPORT

(CONTINUED)

INFLUENT DISTRIBUTION WELL (IF APPLICABLE)
SUPPORTED CORRECTLY __________ LEVEL __________

FEEDWELL
SUPPORT CORRECTLY __________ LEVEL __________

SKIMMER (IF APPLICABLE)
SUPPORTS __________
SKIMMER BLADE (DEFLECTOR) LEVEL __________
SKIMMER ASSEMBLY LEVEL __________
SKIMMER ASSEMBLY PIVOTING FREELY __________
SKIMMER ARMS PARALLEL __________
SPRING TENSION __________

SCUM BOX
SUPPORTS __________ LEVEL __________
ON LINE RADIALLY __________

WEIRS
CORRECT ELEVATION __________ LEVEL __________
SEALED AGAINST WALL __________

BAFFLE
SUPPORTED __________
VERTICAL __________
CONFORMS TO SKIMMER __________

GENERAL
ALL BOLTS TIGHTENED __________

COMMENTS:

INSPECTED BY: ______________________________ DATE: ____________________

CERTIFICATE OF UNIT RESPONSIBILITY

ClearStream Environmental, Inc
9090 South 300 West, Sandy, UT 84070
801.676.1890 Phone │ 801.676.1893 Fax

CITY OF COTTAGE GROVE OREGON

CERTIFICATE OF UNIT RESPONSIBILITY
For Specification Section

SECTION 11338 CLARIFIER

In accordance with the contract documents, the undersigned manufacturer accepts unit responsibility for all components of equipment furnished under specification Section 11338. ***We hereby certify that these components are compatible and comprise a functional unit suitable for the specified performance and design requirements except for those items listed in Section 11338 2.06 electrical components and Section 11338 2.05.N.5.d that states local control panel and owners PLC these items are not part of Clearstream's scope of supply and therefore do not take unit responsiblity.***

CLEARSTREAM
Name of Corporation

9090 S 300 W
Street Address

SANDY, UT 84070
City, State and Zip Code

By:
Duly Authorized Official

TYLER HOGENSON
Name

PROJECT MANAGER
Title

Date: 05/31/2022

Notary Public

6/23/24
Commission Expiration Date

Seal: GERALDINE LEE JOHNSON
NOTARY PUBLIC - STATE OF UTAH
MY COMMISSION EXPIRES 6/23/2024

REVIEWED
SPECIFICATION 11338
CLARIFIER

ClearStream Environmental, Inc
9090 South 300 West, Sandy, UT 84070
801.676.1890 Phone │ 801.676.1893 Fax

REVIEWED SPECIFICATION 11338 05/27/2022

1. Clearstream (CSE) is not providing electrical wiring or local control panels on this project.
2. As stated before, CSE is not providing electrical wiring or local control panels on this project.
3. Alarm torque to be 100% of the continuous torque per table 2.05.C.1
4. Cutoff torque to be 125% of the continuous torque per table 2.05.C.1
5. Addendum No. 2 replaced value of “8” for “Maximum mechanism tip speed, feet per minute” in the operating conditions table with a value of “12”.
6. Strip liners are not used. Precision main bearing is used per 2.05.M.2
7. Addendum No. 2 replaced the following sentence: “The drive shall be designed and rated to develop the following torque values at an approximate output speed of 0.03 rpm (8 fpm arm tip speed)” with the following: “The drive shall be designed and rated to develop the following torque values at an approximate output speed of 0.045 rpm (12 fpm arm tip speed)”
8. Operation and maintenance manual will be submitted after submittal approval. Extended warranty form will be with O&M manual, Instrumentation data and calibration test form is not applicable for this equipment, Manufacturer’s installation certification form will be completed after installation, Manufacturer’s installation certification from repeat of before, Manufacturer’s representative service report will be provided after start up, Motor data from is provided in the submittal, O&M information transmittal; Clearstream has a standard transmittal form, Proposed substitution not applicable, Submittal Transmittal; Clearstream has a standard transmittal form, Unit responsibility certificate is provided in the submittal.
9. Clearstream proposal called out a 1 year warranty.
10. Clearstream proposes a 1” baseplate thickness as long as it meets loading criteria.
11. Clearstream proposes ¼” fillet seal welds as long as it meets loading criteria. Clearstream will verify this before fabrication.
12. Clearstream proposes ¼” fillet seal welds as long as it meets loading criteria. Clearstream will verify this before fabrication.
13. Feedwell and Energy Dissipating Inlet will be a Type 2 LA-EDI that has both components in one.
14. Actual dimensions of square rake arm are determined by structural loading. No adjustable clevis rod will be used. Rake arm to Cage will be attached through fasteners.
15. Clearstream’s design allows up to 12’-0” spacing based off past installs.
16. Scum box width will be greater than 1’-2”
17. Please confirm 8” pipe for scum. Current design has 6” which is terminated and joined together though the use of a fernco coupling. Please provide flange dimensions and elevation if scum box pipe is to mate with existing/new scum piping.

18. The scum beach total peripheral length is slightly under 4’-0”. This is typical of Clearstream design for this size of box. It is Clearstream experience that longer beaches don’t necessary insure better skimming but if this is required Clearstream can design a customer scum box for this project. Please advise.
19. Scum skimmer should be sufficient to attach a launder cleaning brush but Clearstream doesn’t have a launder cleaning brush system in their scope of supply. It would have to be by others. Please provide loading from brush vendor to analyze loading.
20. Clearstream proposal had qty one (1) scum skimmer which would skim the surface once per rotation.
21. Springs are made from stainless steel. No protection needed.
22. Springs are made from stainless steel. No protection needed. Would cause interference in functionality.
23. Clearstream typically uses F593 316 ss fasteners. Which have similar mechanical and chemical properties.
24. Clearstream typically uses F593 316 ss fasteners. Which have similar mechanical and chemical properties.
25. Handrail mounting posts will have gaskets between walkway bridge and handrail post
26. No 1/8” thick neoprene gaskets is used because paint system provides metallic isolation.
27. Teflon sleeves and washers are not needed due to paint system acting like insulator.
28. Paint/coatings will protect from dissimilar metals.
29. Anti-rotation baffle will be supported from the walkway. Clearstream doesn’t have a spray system in their scope of supply. Others to coordinate with Clearstream if necessary.
30. Output and tip speed were changed per addendum.
31. Main spur gear and precision bearing are a combined unit and use the same material, AISI 4140. 2.05.M.2 allows main bearing to be 4140. PRE uses 8620 allow steel in the manufacturing of its pinion gears.
32. Main bearing is grease lubricated.
33. Strip Liners are not used. Precision bearing is used per 2.05.M.2
34. Bearings used in the helical and planetary gear reducers are oil lubricated. 2.05.E.1 calls for gears and bearings to be oil lubricated.
35. Lower pinion bearing is not utilized. The lower bearing is a common failure point. PRE uses planetary gearboxes designed to handle the radial loads eliminating the need for a lower bearing.
36. Diameter of opening in drive top plate is 21”, see drive GA for additional information
37. ClearStream provided platform covers the drive opening. A separate cover, in addition to the platform
38. Turntable is bolted directly to the main precision bearing. Turntable itself does not have a raceway.
39. Main bearing balls in the precision main bearing are grease lubricated. Precision main bearing is used, replaceable strip liners are not used.

40. Control panel and controls are not by the drive manufacturer. Drive unit has switches that can be used to control the equipment.
41. Switches are located in a NEMA 4 housing, which is contained inside a 304 SS NEMA 4X housing.
42. Drive torque gauge will display up to 200% of the continuous torque.
43. Alarm torque to be 100% of the continuous torque per table 2.05.C.1
44. Cutoff torque to be 125% of the continuous torque per table 2.05.C.1
45. Field wiring and control panel are not in Clearstream scope of supply and do not take responsibility for coordination.
46. Not applicable
47. No special tools required.
48. Drive unit utilizes fabricated steel. Fabricated steel is sandblasted and coated prior to assembly.
49. Torque test procedure has been provided in submittal. Clearstream typically anchors both arms to the floor, one arm will have the dynamometer to measure force. Typically Cleastream loads the mechanism until cutoff occurs.
50. See comment above.
51. Section 01825 could not be found. No additional testing is provided.

SECTION 11338

CIRCULAR SECONDARY CLARIFIER EQUIPMENT (CIRCULAR PLOW TYPE)

PART 1 - GENERAL

1.01 SUMMARY

✓ A. This section covers furnishing circular clarifier equipment that shall be pre-purchased for installation (by others) within an existing circular secondary clarifier tank at the City of Cottage, Oregon Wastewater Treatment Plant (WWTP). The existing Secondary Clarifier No. 1 is a center feed, peripheral overflow design with an outboard concrete launder and center sludge hopper configuration.

✓ B. The equipment shall be designed for gravity separation of mixed liquor solids from the activated sludge process and shall be specifically designed for installation within the existing Secondary Clarifier No. 1 and existing conditions shown in the as-builts provided and as described herein.

✓ C. The clarifier mechanism shall be of the center drive type, supported on a stationary influent column with the flow entering at the bottom of the influent column and flowing upward into the energy dissipating inlet. The flow shall then proceed into the hydraulic flocculating feedwell through tangential gates near the water level for further energy dissipation and settling. The clarifier mechanism shall be designed to remove settled sludge from the center hopper at the bottom of the tank and floating scum from the surface of the tank.

✓ D. The equipment specified herein includes sludge and scum collection equipment, scum troughs, scum baffles, weir plates, drive equipment, bridge and walkway for access to the drive equipment, and miscellaneous appurtenances as specified.

1 ✗ E. Equipment shall be furnished complete with all mechanical and electrical components and accessories required for proper installation and operation, including complete drive units and controls; and any additional materials or construction required by the manufacturer to meet the requirements of the pre-purchase package.

2 ✗ F. The supplier shall furnish a system that is fully coordinated and operating properly. All items required for a complete and properly operating system shall be provided, whether specifically called for or not.

✓ G. Equipment tag numbers:

  1. Secondary Clarifier No. 1: 60-SDR-01

✓ 1.02 REFERENCED SECTIONS

A. The following Sections are referenced in this Section:

  1. Section 01330 – Submittals
  2. Section 01782 – Operation and Maintenance Information

3. Section 01825 – Equipment and System Testing

4. Section 01999 – Reference Forms

5. Section 05520 – Handrail

6. Section 05530 – Aluminum Grating

7. Section 11000 – General Requirements for Equipment

8. Section 11060 – Electric Motors

1.03 REFERENCES

✓ A. This section contains references to the documents listed below. They are a part of this section as specified and modified. Where a referenced document cites other standards, such standards are included as references under this section as if referenced directly. In the event of conflict between the requirements of this section and those of the listed documents, the requirements of this section shall prevail.

✓ B. Unless otherwise specified, references to documents shall mean the documents in effect at the time of Advertisement for Bids or Invitation to Bid (or on the effective date of the Agreement if there were no Bids). If referenced documents have been discontinued by the issuing organization, references to those documents shall mean the replacement documents issued or otherwise identified by that organization or, if there are no replacement documents, the last version of the document before it was discontinued.

✓ C. The following is a list of standards that may be referenced in this section:

1. American Bearing Manufacturers Association (ABMA).
2. American Gear Manufacturers Association (AGMA):
    a. 2001, Fundamental Rating Factors and Calculation Methods for Involute Spur and Helical Gear Teeth.
    b. 2004, Gear Materials, Heat Treatment and Processing Manual.
    c. 6022, Design Manual for Cylindrical Wormgearing.
    d. 6034, Practice for Enclosed Cylindrical Wormgear Speed Reducers and Gearmotors.
    e. 9005, Industrial Gear Lubrication.
3. American Institute of Steel Construction (AISC).
4. American Iron and Steel Institute (AISI).
5. American Society of Mechanical Engineers (ASME): B29.100, Precision Power Transmission, Double-Pitch Power Transmission, and Double-Pitch Conveyor Roller Chains, Attachments, and Sprockets.
6. American Water Works Association (AWWA): C200, Steel Water Pipe – 6 In. (150 mm) and Larger.
7. American Welding Society (AWS):

    a. D1.1/D1.1M, Structural Welding Code – Steel.
    b. QC 1, Standard for AWS Certification of Welding Inspectors.

8. American Society for Testing and Materials (ASTM) International:
    a. A36/A36M, Standard Specification for Carbon Structural Steel.
    b. A48/A48M, Standard Specification for Gray Iron Castings.
    c. A148/A148M, Standard Specification for Steel Castings, High Strength, for Structural Purposes.
    d. A283/A283M, Standard Specification for Low and Intermediate Tensile Strength Carbon Steel Plates.
    e. A285/A285M, Standard Specification for Pressure Vessel Plates, Carbon Steel, Low- and Intermediate-Tensile Strength.
    f. A536, Standard Specification for Ductile Iron Castings.

9. National Electrical Manufacturers Association (NEMA):
    a. 250, Enclosures for Electrical Equipment (1000 Volts Maximum).
    b. MG 1, Motors and Generators.

1.04 DEFINITIONS

3 ✗ A. **Alarm Torque:** The torque at which an alarm sounds to serve as a warning of increased torque loading. The alarm torque is defined to be equal to 90 percent of the continuous operating torque.

✓ B. **Continuous Operating Torque:** The continuous operating torque is defined as the AGMA design torque, which is the torque load that is assumed to be continuously applied to the sludge and scum collection equipment by the drive system through a 24-hour operating period, 365 days per year for a 20-year life.

4 ✗ C. **Cutout Torque:** The torque load at which a motor cutout switch is activated to shut down the unit. The cutout torque is defined to be not less than 120 percent of the continuous operating design torque.

✓ D. **Energy Dissipating Inlet (EDI):** A device mounted at the center discharge column designed to dissipate the kinetic energy of the flowing wastewater as it is discharged from the center column inlet ports. Energy is dissipated through the dual effects of the energy dissipating inlet and the flocculation well.

✓ E. **Momentary Peak Torque:** The maximum or peak torque of the drive unit assumed to be equal to twice the calculated AGMA torque rating of the spur gear set or 3 times calculated AGMA torque rating of the worm gear set, whichever is lower.

✓ F. **RAS:** Return Activated Sludge.

✓ G. **Set:** Equipment necessary to completely furnish 1 clarifier.

✓ H. **Sidewater Depth:** Vertical distance from the normal water surface elevation in the clarifier to the top of the base slab as measured at the outer wall of the clarifier.

✓ I. **Slenderness Ratio:** Ratio of unbraced length to least radius of gyration.

✓ J. **Submerged Metal:** Metal below gear head drive and plane 18 inches above weir elevation indicated.

1.05 DESIGN REQUIREMENTS

A. Existing Secondary Clarifier Characteristics

1. The equipment shall be suitable for installation within an existing secondary clarifier with the following physical dimensions:

Item	Value	
Nominal Internal Diameter, feet	85	✓
Approximate Sidewater Depth, feet	12	✓
Approximate Slope of Clarifier Bottom Slab (inches/foot)	1” per foot	✓
Maximum allowable headloss through the clarifier equipment at maximum inlet flow, inches	12	✓
Freeboard at maximum inlet flow, feet	1.76	✓
Notes Sidewall depth and bottom slope have been obtained from original design drawings for each clarifier and have not been field verified. Repairs will be made to the clarifier floor after procurement of the mechanism. The Contractor will be responsible for making the repairs compatible with the mechanism as defined in this Section and installing the mechanism.		

B. Operating Conditions

1. The equipment shall perform in accordance with the following operating conditions:

Item	Value	
Maximum inlet flow, mgd (peak flow with maximum return sludge return)	12	✓
Minimum inlet flow, mgd (minimum flow with minimum return sludge return)	0.4	✓
Maximum return sludge flow, mgd	2.0	✓
Minimum return sludge flow, mgd	0.2	✓
Maximum center column mixed liquor inlet port headloss at maximum inlet flow, feet	0.2	✓
Design SVI, mL/g	200	✓
Mixed liquor suspended solids concentration range, mg/L	1,850 – 3,200	✓
Maximum mechanism tip speed, feet per minute	8	✗ 5
Mechanism Rotation	Clockwise	✓
Sludge viscosity, N-sec/m2	0.001 – 0.01	✓

C. Sludge and Scum Removal

✓ 1. Clarifier equipment shall collect and convey settled sludge to the center sludge pit.

✓ 2. Clarifier equipment shall collect, convey, and discharge floating scum from the surface of the clarifier to defined area at outside perimeter of the unit.

✓ 3. Capable of withstanding, without failure or permanent deformation of any part, Momentary Peak Torque rating as defined herein.

D. Drive Mechanism:

✓ 1. All drive gears and bearings shall be located above water level and all gearing shall be completely enclosed and grease or oil lubricated.

6 ✗ 2. Easy removal of internal gears, balls, and strip liners without walkway bridge removal.

✓ E. Design Running Torque:

1. 15,000 foot-pounds minimum foot pounds minimum.

7 ✗ F. Rotational Speed:

1. Between 0.03 and 0.025 rpm.

1.06 STRUCTURAL DESIGN CRITERIA

✓ A. General

1. In accordance with Oregon Structural Specialty Code (OSSC), tanks, mechanical and electrical components, and other elements of the Work that are permanently attached to structures shall be designed and constructed to transfer the component seismic forces specified in ASCE 7, Chapter 13 to the structure.

✓ 2. Seismic attachments braces, and anchorages shall be designed in accordance with the provisions of the OSSC and the site-specific seismic criteria as follow:

a. Site-Specific Spectral Response Coefficients

1) Short Period Mapped Maximum Considered Earthquake, 5 Percent Damped: Ss=0.661g

2) Short Period Mapped Maximum Considered Earthquake, 5 Percent Damped: S_1=0.386g

3) Short Period Design Spectral Response Acceleration, 5 percent Damped: $S_{DS} = 0.560$

4) 1 Second Period Design Spectral Response Acceleration, 5 percent Damped: $S_{D1} = 0.508$

b. Site Class: D

c. Seismic Design Category: D, unless noted otherwise

d. Risk Category: III, unless noted otherwise

e. Component Importance Factor, Ip:

1) Mechanical and Electrical Equipment: Use 1.25.

2) Tanks and Tank Anchorage: Use 1.25.

3) Components that contain hazardous materials: Use 1.5.

4) Components that are required for life safety: Use 1.5.

f. Components that must remain functional after an earthquake, such as fire protection sprinkler systems: Use 1.5.Do not use more than 60 percent of the weight of tanks and mechanical and electrical equipment for designing anchors for resisting overturning due to seismic forces.

g. Do not use friction to resist sliding due to seismic forces.

✓ B. Equipment Design drive cage, each sludge rake arm, and associated supports and connecting members to transmit and/or carry all loads and stresses associated with 200% of the continuous operating torque at the AISC allowable stresses. Do not exceed AISC allowable stresses by more than 33 percent under this loading condition. In addition to the specified operating loads, each member shall be designed to withstand a point load of 200 pounds applied perpendicular to its weak axis at the midpoint between its support areas.

1. Size structural members to accommodate the momentary peak torque without exceeding a deflection of L/100 where L is the length of the structural member.

✓ C. Drive Cage Design

1. Design drive cage as a box truss with connections for the two sludge rake arms and feedwell supports.

2. Design drive cage to withstand 200 percent of the continuous operating torque without overstressing the members. Consider the loading to develop the continuous operating torque as a uniform load applied to each rake arm.

3. Minimum Member Size: 2-inch by 2-inch by 1/4-inch angles.

✓ D. Sludge Rake Arm Design

1. Design rake arms as a steel truss using triangular or box truss construction.

✓ E. Influent Column Design

1. Design center influent column to support the drive mechanism, the sludge collection mechanism, scum skimmer arms, utility piping, access bridge, and related appurtenances.

✓ F. Energy Dissipating Inlet Design

1. Design the EDI and associated supports to support the weight of the EDI plus the weight of water to a depth of 2 inches within the EDI.

✓ G. Scum Removal Mechanism

1. Design scum trough with sufficient rigidity to limit deflection and sagging to a maximum of 1/2-inch such that skimmer wiper contacts trough along entire length of wiper.

✓ 2. Design scum trough and associated supports for all dead loads and live loads encountered during operation. Design scum trough and supports for the following two loading conditions:

   a. Trough is plugged and full of water and clarifier is empty.

   b. Trough is empty and clarifier is full of water.

✓ 3. Support scum trough from concrete wall of clarifier. Connect scum trough to scum baffle but do not transfer load to the scum baffle.

✓ H. Access Bridge Design

1. Design access bridge and operating platform for a live load of 60 lbs/ft^2. Deflection under full live load and dead load shall not exceed 1/360 of the span.

2. The access bridge shall span one half of the diameter of the clarifier.

✓ 1.07 PROJECT CONDITIONS

A. Environmental Project Conditions:

1. Installation in a wastewater treatment plant.

2. Moderate quantities of commercial and industrial waste.

3. Exposure to industrial solvents and petroleum products.

4. Operation at 628 feet above mean sea level.

5. Ambient Air Temperature:

   a. Maximum: 105 degrees Fahrenheit

   b. Minimum: -5 degrees Fahrenheit.

6. Wastewater temperature:

   a. Maximum: 80 degrees Fahrenheit

   b. Minimum: 50 degrees Fahrenheit.

1.08 SUBMITTAL

A. Submit within 60 days of notice to proceed in accordance with Section 01330; include the following information:

✓ 1. Completed Certificate of Unit Responsibility (Section 01999) attesting that the manufacturer accepts, unit responsibility in accordance with the requirements of this Section and Section 11000. No other submittal material will be reviewed until the certificate has been received and found to be in conformance with these requirements.

✓ 1. Product Data: Submit manufacturer’s standard catalog data, descriptive literature, motor and drive system data, parts list, and specifications describing system components.

✓ 2. A copy of this specification section, with addendum updates included, and all referenced and applicable sections, with addendum updates included, with each paragraph check-marked to indicate specification compliance or marked to indicate requested deviations from specification requirements. Sections to be marked-up and submitted shall include:

   a. Section 05520 – Handrail
   b. Section 05530 – Aluminum Grating
   c. Section 11000 – General Requirements for Equipment
   d. Section 11060 – Electric Motors
   ✓ e. A check mark shall denote full compliance with a paragraph as a whole. If deviations from the specifications are indicated, each deviation shall be underlined and denoted by a number in the margin to the right of the identified paragraph referenced to a detailed written explanation for requesting the deviation. The City shall be the final authority for determining acceptability of requested deviations. The remaining portions of the paragraph not underlined will signify compliance on the part of the Manufacturer with the specifications. Failure to include a copy of the marked-up specification sections, along with justification(s) for any requested deviations to the specification requirements, with the submittal shall be sufficient cause for rejection of the entire submittal with no further consideration.

✓ 3. Shop Drawings

   a. Provide general arrangement drawings showing the entire assembly. Include a materials list and descriptions of major components of the clarifier mechanism. Indicate:
      1) Size, thicknesses, and material designation for structural members.
      2) Dimensions.
      3) Details of connections to the concrete structure for the access bridge, scum trough, and center column.
      4) Descriptive information and electrical schematic for torque overload device.
      5) Location of piping connections.
   b. Submit manufacturer's equipment mounting instructions, requirements and detailed drawings for the installation of the secondary clarifier.
   c. Electrical control schematics for motors, wiring diagrams, and process and instrumentation diagrams.

4. Calculations

   ✓ a. Structural calculations identifying static, dynamic and torque reaction loads to be transferred into the structure at the center column and the access bridge support location.

   ✓ b. Structural design calculations for collector mechanism components, access bridge, bridge handrail, and other components substantiating the ability of each component to withstand the stresses imposed at the loads and torque conditions described in this Section.

   ✓ c. Sludge transport calculations substantiating withdrawal rates, headlosses, the sludge scraper blade design, rake tip speed, and floor slope and general sizing of equipment.

   ✓ d. Anchor bolt design calculations.

   ✓ e. Hydraulic calculations and process performance calculations for sizing the center column and discharge ports; EDI and EDI outlets; and flocculation well, demonstrating compliance with the specified requirements.

   ✓ f. Calculations documenting the AGMA rating of the drive unit and life of the main bearing.

5. Testing

   ✓ a. Factory Tests: Provide certified shop inspection reports indicating that all components of the secondary clarifiers have been factory-tested in accordance with the manufacturer's requirements and that the components meet or exceed the requirements of this Section.

   ✓ b. Proposed on-site testing and start-up procedures, including sketches and calculations for specified tests.

✓ 6. Manufacturer's Experience and Qualifications

   a. Installation list.

   b. Manufacturer qualifications.

7. Documentation

   8 ✗ a. Operation and Maintenance Data: Comply with Section 01782.

   b. Complete and submit applicable forms from Section 01999.

      1) Extended Warranty Form
      2) Instrumentation Data and Calibration Test Form
      3) Manufacturer's Installation Certification Form
      4) Manufacturer's Instruction Certification Form
      5) Manufacturer's Representative Service Report
      6) Motor Data Form
      7) O&M Information Transmittal
      8) Proposed Substitution

9) Submittal Transmittal
10) Unit Responsibility Certificate

1.09 QUALITY ASSURANCE

✓ A. Manufacturer’s Experience

1. A minimum of 15 years of experience in the design, application, and supply of circular clarifiers in wastewater treatment plants.
2. A minimum of 6 installations in which the proposed mechanism design, including sludge removal system, foam removal system, EDI design, and drive configuration, has been installed and is in operation. Provide installation date, clarifier size and component details, and owner contact information for each installation.

✓ B. Certificate of Unit Responsibility

1. Providing a certificate of unit responsibility shall not be construed as relieving the Contractor of overall responsibility for this portion of the Work.

✓ C. Coordination

1. The mechanism will be installed by the Contractor during the dry weather season between May and November of 2023.

1.10 DELIVERY, STORAGE AND HANDLING

✓ A. Fabricate clarifier equipment in the largest sections possible and allowed by shipping carriers. Identify and match components for ease of field erection.

✓ B. Sequencing Requirements

1. Clarifier equipment will be installed by the Contractor at a later date.

✓ C. Site Storage and Handling of Equipment

1. Store the supplied equipment in accordance with the manufacturer’s recommendations and instructions.
2. Take responsibility for work, equipment, and materials until inspected, tested and finally accepted.

1.11 MANUFACTURER’S EXTENDED WORKMANSHIP WARRANTY

A. Provide a written warranty from the manufacturer for the equipment specified in this Section.

9 ✗ 1. Warranty Period: Five (5) years from acceptance of equipment.

✓ 2. Coverage: Cover defects or failures of materials or workmanship which occur as the result of normal operation and service. The following components are subject to wear and are excluded from coverage:

   a. Squeegees.
   b. Skimmer wipers.

PART 2 - PRODUCTS

✓ 2.01 MANUFACTURERS

A. Materials, equipment, and accessories specified in this Section shall be the product of one of the following manufacturers, or equal.

1. Walker Process Equipment, Division of McNish Corporation
2. Clear Stream Environmental
3. EIMCO Water Technologies (OVIVO)
4. Evoqua Water Technologies
5. WesTech Engineering

2.02 FABRICATION

✓ A. Fabricate submerged components of the sludge collector mechanism from Type 304 Stainless Steel.

   1. Minimum Thickness of Structural Members: 1/4-inch, or as necessary based on structural design calculations.

✓ B. Shop Welding

   1. Comply with Structural Welding Code, AWS D1.1, of the American Welding Society.
   2. For all welded connections, develop the full strength of the connected elements.
   3. Seal weld joined or lapped surfaces with minimum 3/16-inch fillet weld. Stitch welding is not permitted.
   4. For metals other than stainless steel, grind welds smooth and grind edges of cut or sheared metal to a radius by multiple passes of a power grinder. For stainless steel, dull edges of cut or sheared members by at least 1 pass of a power grinder.

2.03 CLARIFIER EQUIPMENT COMPONENTS

✓ A. Influent Structure Components

   1. Center Column.
   2. Energy Dissipating Inlet.
   3. Flocculation Well.
   4. Weir Plates.

✓ B. Center Column

   1. Description: Stationary, vertical column with bottom support flange for bolting to the clarifier floor slab at the center of the clarifier tank and with

a similar support flange at the top for supporting the drive unit, rotating mechanism, and access bridge.

✓ 2. Wall Thickness: As required for structural loads, minimum 1/4-inch thick and designed to withstand twice the continuous torque of the drive mechanism.

✓ 3. Material: Type 304 stainless steel.

4. Bottom Support Flange:

   10 ✗ a. Thickness: As required for structural loads, minimum 1-1/4-inch thick.

   ✓ b. Material: Type 304 stainless steel.

   11 ✗ c. Weld bottom support flange to center column with full penetration welds.

   ✓ d. Bolt Holes: Size, number, and spacing to accommodate required number and size of anchor bolts.

5. Top Support Flange:

   ✓ a. Thickness: Minimum 3/4-inch thick.

   ✓ b. Material: Type 304 stainless steel.

   12 ✗ c. Welded to center column with full penetration welds.

   ✓ d. Designed for bolting the drive unit and access bridge to the flange.

✓ 6. Center Column Anchor Bolts:

   a. See Section 2.07.A in this Specification.

✓ C. Energy Dissipating Inlet (LA-EDI)

1. Performance Requirements:

   a. Supported from the center well support structure.

   b. Function: Enhance flocculation and diffuse influent liquid into clarifier.

   c. Size and Dimensional Design Details: Provided by US Patent Holder (Licensor) and licensed to Owner (Licensee). Licensing fees shall be paid by the selected manufacturer to Clarifiers, Inc., P.O. Box 745, Enfield, NH 03748 (Licensor) and shall be included in clarifier mechanism cost.

   d. Equip with multiple wing-type outlet nozzles attached to bottom of influent well. Nozzle ports shall be arranged in an opposing jet configuration to create flow impingement, disparate energy and promote flocculation.

13 ✗ D. Flocculation Well

1. Locate flocculation well outside of the EDI. Design flocculation well to diffuse the liquid into the clarifier without disturbance or formation of velocity currents.

2. Provide baffled openings near the water surface to allow scum to exit the flocculation well. Equally space openings around the circumference of the flocculation well.

3. The flocculation well shall be not less than 17’-6” diameter x 4’-6” side depth.

4. Fabricate flocculation well from 3/16-inch thick Type 304 stainless steel plate with stiffening members located as needed to maintain rigidity with stiffening angles around top edge.

5. Scum relief ports shall be provided on the flocculation well.

6. Flocculation well may be stationary or rotating.

   a. Stationary: Support flocculation well from the bridge framework with additional supporting members as required.

   b. Rotating: Support from the drive cage or from the rake arms. Design submerged supports extending from the rake arms in a manner that minimizes horizontal flow disruption.

E. Sludge Removal Components

✓ 1. Description

   a. Function: Transport settled sludge and prevent sludge dilution at the sludge pit.

   b. Basic Elements: Drive cage and sludge rake arms.

✓ 2. Drive Cage

   a. Provide a drive cage that encompasses the center column and provides connections for rotating elements of the clarifier equipment.

   b. Material: Type 304 rolled stainless steel with a minimum thickness of 1/4” meeting AISC specifications when twice the continuous torque of the drive unit is applied.

   c. Design drive cage to transmit torque from the drive unit to the sludge rake arms and skimmers.

   d. Bolt top of drive cage to the main gear which operates to rotate the drive cage with the attached rake arms, skimmer arms, and flocculation well.

3. Sludge Rake Arms

   ✓ 1) General: Provide two sludge rake arms equipped with spiral-shaped sludge scraper blades and adjustable squeegees.

14 ✗ b. Sludge Scraper Blades:

   1) The clarifier mechanism shall have two rigidly braced 304 stainless steel arms supported by the drive cage. The arms shall be of triangular or rectangular truss connection with rectangular truss dimensions not less than 4’-0” high x 3’-6”

wide. The arms shall be connected to the drive cage with adjustable clevis rods.

✓ 2) Each arm shall support one (1) 304 stainless steel spiral-shaped scraper blade that is fitted with vertically adjustable squeegees constructed from 20ga Type 304 stainless steel.

✓ 3) The scraper blade depth shall vary from a minimum of 8 inches at the tank periphery to a maximum depth of at the opposite end near the center of the tank. The maximum depth of the flight shall be determined by sludge transport calculations supplied by the manufacturer.

✓ 4) Designed and constructed to a logarithmic spiral curve with a constant 30 degree angle of attack and be positioned to effectively transport sludge to the sludge pit.

c. Squeegees:

✓ 1) Material and Thickness: Type 304 stainless steel, 20 gauge minimum thickness.

✓ 2) Fasten to sludge scraper blade with stainless steel bolts. Provide slotted bolt holes in squeegee to allow vertical adjustment.

✓ d. Provide a neoprene seal or equivalent at the termination point between the scraper blades and the sludge collection drum or the sludge withdrawal ring.

✓ e. The collector arms shall be designed to meet AISC specifications when twice the continuous torque of the drive unit is applied as a uniform load to both arms.

F. Scum Removal System

✓ 1. Description:

a. Consisting of a scum skimmer assembly that pushes floating scum to a scum trough for removal. Basic components of skimmer assembly include scum deflector blades and skimmer device.

✓ 2. Materials:

a. Skimmer Support Arms: Structural Steel

b. Scum Deflector Blades: 1/4” minimum thickness steel plate

c. Scum Skimmer Wipes: Oil resistant neoprene

d. Wear Block: Polyvinyl Chloride

e. Wear Block Spring Enclosure: Welded steel or cast iron housing

f. Springs, Threaded Fasteners: 18-8 stainless steel

g. Scum Trough and Scum Beach:

1) Fabricated from 3/8” minimum thickness steel plate.

2) Supported from clarifier wall by structural steel braces.

3. Structural Design:

15 ✗ a. Space supports brought up from the truss arm at not greater than 10 feet apart.

✓ b. Attach inner end of skimmer tangentially to flocculating well.

16 ✗ c. Support the scum trough and scum beach (inclined ramp) from tank wall using structural steel braces.

   1) Scum Trough Width, 1’-2” minimum.

17 ✗ d. 8-inch minimum diameter standard pipe flanged connection for scum discharge pipe.

✓ e. No internal stiffeners or structural members which obstruct scum flow.

   18 ✗ 1) Scum beach (inclined ramp):

      a) Length: 7’-0” minimum along the peripheral scum baffle.

4. Mechanical Design:

✓ a. Skimming Device: Attach a scum deflector blade to the collector mechanical arm to move floating scum outward to a circumferential scum baffle. The scum deflector blade shall extend from the flocculating well to the hinged scum skimmer.

✓ b. Attach a hinged scum skimmer to the deflector blade.

✓ c. Provide a maximum angle of approach of skimming device scum deflector blade to the scum in order to drift the scum as readily as possible to circumferential baffle.

✓ d. Provide an inclined approach ramp (scum beach) and trough with the beach shaped to contain scum as it moved up the incline to the trough by the scum skimmer.

5. Elements:

a. Scum Skimmers:

   ✓ 1) Provide scum skimming device on the outer end of the scum deflector blade to trap scum for discharge into scum trough. Scum skimming device shall be the full length of the scum trough.

   19 ✗ 2) Scum skimmer assembly, supports, and sludge collection rake arm designed to operate with launder cleaning brush mechanism supported by the arm, and to withstand forces imposed by brush mechanism.

   20 ✗ 3) Maintain continuous contact and proper alignment with scum baffle and inclined scum ramp to positively rake scum to the scum trough twice for each revolution of the mechanism.

✓ 4) Use a hinged blade with replaceable scum skimmer wipers on the bottom inner and outer edges to seal the entrapped scum and water when moving up the inclined approach ramp to the scum trough.

✓ a) Hinged blade adjustable vertically to control the dewatering of scum as it travels up the inclined ramp to the scum trough.

✓ b) Hinged blade adjustable vertically over the length to ensure contact with the scum trough even though the trough may not be level.

✓ c) Hinged blade capable of being raised and locked out above the water level or held horizontally against the circumferential baffle when skimming is not required.

✓ 5) Equipment manufacturer shall size and locate counterweights to be installed by the Contractor.

✓ 6) Do not support scum skimmers from the scum baffle.

b. Wear Block

✓ 1) Provide a replaceable wear block on the outer edge of each scum skimmer device.

✓ 2) Wear block constantly forced against circumferential scum baffle to keep baffle clean using a coiled spring arrangement.

✓ a) Force between baffle and wear block adjustable between 1 to 5 pounds.

21 ✗ b) Coiled springs enclosed to protect them from the weather.

22 ✗ c) Spring enclosures: Bronze bushed and grease lubricated for easy movement of hinged blades.

c. Scum Baffles

✓ 1) Plates, baffles, and supports: ASTM A167 and ASTM A276, minimum 1/4-inch thick.

23 ✗ 2) Fasteners: ASTM A193/A193M and ASTM A194/A194M, Type 316.

G. Weir Plates

✓ 1. Plates, baffles, and supports: ASTM A167 and ASTM A276, minimum 1/4-inch thick.

24 ✗ 2. Fasteners: ASTM A193/A193M and ASTM A194/A194M, Type 316.

H. Dissimilar Metals

25 ✗ 1. Isolate dissimilar metals or connectors to prevent direct contact and electrical conductivity.

26 ✗ 2. Use 1/8” thick continuous neoprene gasket to insulate aluminum grating, checker plate, and handrail post bases from access walkway support bridge and other components.

27 ✗ 3. Use insulating washer and Teflon sleeves at bolted connections

2.04 ACCESS BRIDGE AND OPERATING PLATFORM

A. Materials of Construction: Fabricate access bridge and operating platform from the materials listed in the following table:

Component	Material
✓ Structural Support Members and Miscellaneous Structural Elements	Structural Steel
Walking Surface – Along Bridge	Aluminum grating per Section 05530
✓ Walking Surface – Operating Platform	1/4” aluminum checker plate
✓ Slide Plates at Bridge Anchorage	UHMWPE
✓ Anchor Bolts and Fastening Hardware	Type 316 stainless steel

✓ B. Minimum Clear Width of Bridge Walkway: 36 inches.

✓ C. Bridge Support Design

1. Design and fabricate main bridge support members with structural beam sections or welded steel trusses to resist structural loads. Diagonally brace against lateral movement.

2. Support bridge support members from the influent center column at the center of the clarifier and the tank wall at the clarifier outer end.

3. Design anchorage at clarifier outer wall with stainless steel bearing plates, UHMW-PE slide plates, and anchor bolts.

28 ✗ D. Protect dissimilar metals from galvanic corrosion by means of pressure tapes, coatings or dielectric isolators. Protect aluminum in contact with concrete by a heavy coat of bituminous paint.

✓ E. Provide aluminum three-rung handrail and kickplate along the access walkway and operating platform as specified in this Section and Section 05520. Handrail shall be mounted on each side, 3’-6” above the walkway surface.

✓ F. Provide an operating platform around the drive mechanism. Size platform with a minimum clearance of 36 inches around the drive.

29 ✗ G. Support anti-rotation baffle, utilities and spray system from the bridge and operating platform.

2.05 DRIVE MECHANISM

✓ A. Drive Mechanism Components: Electric gear motor, pinion, torque overload protection system, turntable, worm gear and worm gear reducer or cycloidal/helical/planetary reducer with associated appurtenances.

B. General

✓ 1. The center drive mechanism shall consist of a motor driven primary gear reduction unit, steel roller chain drive (if used), shear pin coupling, intermediate wormgear reduction unit (if used), enclosed final gear reduction unit, and a torque limiting device. The intermediate wormgear reduction unit and the final gear reduction unit shall be the product of the Equipment Manufacturer.

C. Design Parameters

30 ✗ 1. The continuous output torque rating of the spur and pinion gearing shall be based on the smaller of the rating values determined from the above ANSI/AGMA standards and a design life of 20 years. The drive shall be designed and rated to develop the following torque values at an approximate output speed of 0.03 rpm (8 fpm arm tip speed.):

Operating Condition	Foot-Pounds	Notes
Continuous	15,000	At 1.0 Service Factor
Alarm	15,000	100% of Continuous
Motor Cut-Off	18,750	125% of Continuous
Momentary Peak	30,000	200% of Continuous
Shear Pin	-	Less than 200% of Continuous

✓ 2. All gearing shall be designed to AGMA standards, and the gearbox manufacturer shall be a Member of the American Gear Manufacturers Association (AGMA). All calculations shall be submitted to the engineer for approval substantiating the continuous output torque rating and design life. Calculations shall include the spur gear, pinion, wormgear set, and all bearings used I the intermediate wormgear reduction unit and the final gear reduction unit.

✓ 3. The spur gear and pinion calculations shall clearly specify the values used for the following design parameters for surface durability and bending strength ratings:

a. Number of pinions

b. Actual Face Width

c. Tooth Geometry Factor (I and J Factors

d. Load Distribution Factor

e. Aspect Ratio

f. Allowable Contact Stress

g. Allowable Bending Stress

h. Pinion Pitch Diameter

i. Tooth Diametrical Pitch

j. Hardness Ratio Factor

k. Elastic Coefficient

l. Life Factor

m. Application Factor

n. Rim Thickness Factor

o. Worm & Wormgear Grade

p. Pinion & Gear Quality Number

D. Materials of Construction

1. Fabricate components of the drive mechanism from materials specified in the following table:

Component	Material
Main spur gear	Ductile iron ASTM A536, 80-55-06 Forged steel ASTM A536, 80-55-06
Worm (if used)	Through hardened AISI 41L50 alloy steel or AISI 8620 alloy steel
Worm gear (if used)	ASTM B247, gear bronze alloy casting or ASTM A536 ductile iron or UNS 86300 high strength manganese bronze per ASTM B271
Pinion	AISI 4140, 4150 or 4340
Main bearings	SAE 52100, Rockwell C64
Anchor bolts and other fastening hardware	Type 316 stainless steel

✗ 31

E. Lubrication

32 ✗ 1. Gears and bearings shall be entirely oil lubricated. Supply lubricants and dust shields for gears and bearings with the installation of the equipment.

✓ 2. Install lubrication fittings in readily accessible locations.

3. Oil Lubrication

✓ a. Gear and bearing housing shall be fitted with oil level sight glasses.

33 ✗ b. Strip liners shall be provided with the main gear for maintenance.

✓ c. Gears and bearings shall have an oil reservoir below the main bearing to collect foreign material and prevent contamination of the main bearings and gears with condensate or other contaminants.

✓ F. Electric Gear Motor

✓ G. Motor: The drive motor shall be 1800 rpm conforming to Section 11060. The motor shall be designed for continuous duty, Class II applications in accordance with AGMA 6019-E. The motor shall be Type 2 as specified in Section 11060.

1. Minimum Continuous Horsepower: not less than 3/4.

2. Electrical Service: 480 volts, 3 Phase, 60 hertz

3. Gear Motor Enclosure: Total Enclosed Fan Cooled (TEFC), in NEMA 7 Enclosure.

4. Service Factor: 1.15.

5. Insulation Rating: NEMA Design B employing Class F insulation.

6. Motor Bearings: Rated for a minimum L-10 life of 100,000 hours.

7. Furnish gear motor with the manufacturer's standard enamel coating.

H. Worm Gear Reducer (if used)

1. Provide a worm assembly with a through hardened and ground alloy steel worm and a centrifugally cast bronze worm gear.

2. Load Capacity and Torque Rating: AGMA 6034.

3. Design: AGMA 6022.

4. Provide a self-contained worm gear assembly, enclosed in a cast iron gear case.

5. Roller chain and sprocket drive assembly shall provide power transmission between the gear motor and a special, single-reduction worm gear reducer.

6. Provide a worm that is integral or keyed to the worm shaft.

7. Service factor of 1.25 minimum applied to input horsepower of speed reducer when center drive unit is operating at Design Running Torque.

I. Cycloidal/Helical/Planetary Reducer (if used)

1. The speed reducing unit shall be directly connected to a motor without the use of chains or v-belts, and shall be keyed to the pinion.

2. The main ring gear of cycloidal drives shall be made of high carbon chromium bearing steel and be fixed to the drive casing.

3. An eccentric bearing on the high speed shaft shall roll cycloidal discs of the same material as the cycloidal drives around the internal circumference of this main ring gear.

4. The lobes of the cycloid disc shall engage successively with pins in the fixed ring gear. The movement of the cycloid discs shall be transmitted by pins to the low speed shaft. Speed reducer efficiency shall be a minimum of 90% per reduction stage.

✓ 5. Speed reducer of helical or planetary gearing shall be manufactured to AGMA standards and shall provide at least 95% power transmission efficiency per stage.

34 ✗ 6. The reducers shall be fitted with radial and thrust bearings of proper size for all mechanism loads and grease-lubricated. As a safety feature, the speed reducer shall be back drivable to release any stored energy as the result of an over torque condition.

✓ 7. Service factor of 1.25 minimum applied to input horsepower of speed reducer when center drive unit is operating at Design Running Torque.

J. Pinion Gear

1. Provide a pinion and shaft, which drive the internal spur gear, that are made as an integral unit or keyed and made from heat treated forged alloy steel and designed in accordance with ANSI/AGMA 2004.

35 ✗ 2. Rigidly support the pinion by bearings located above and below the pinion gear.

3. Wall Thickness (Above Keyway): Minimum depth of one tooth.

✓ K. Spur Gear Assembly

1. Provide a spur gear of AGMA Quality 6 or higher.

2. If the spur gear is of a split gear design, provide two halves with precision mating surfaces with self-registering and indexed fits.

3. Provide A36 fabricated steel or ASTM A48 Class 40 cast iron spur gear housing.

4. Provide a felt or neoprene seal and dust shield with each spur gear housing at the lower seal (located between the stationary drive base and main gear) and the upper seal (located between the main gear and stationary drive cover).

5. Provide access to the oil drain and condensate valves from the walkway. Provide the ability to determine the oil level and presence of condensate from the walkway.

6. If grease lubricated, provide grease lubrication from the main gear to pinion gear mesh.

7. Firmly mount the drive assembly to a cast iron turntable base with a minimum wall thickness of 1/2” or a fabricated steel turntable base with a minimum thickness of 3/8”.

8. Mount the drive base on the center column and provide with a positive leveling feature.

9. Provide a drive base that is suitable for supporting the entire load of the drive mechanism and access bridge.

36 ✗ 10. Provide each assembly with an access opening of not less than 22” in diameter to permit inspection and maintenance of components in the interior of the drive unit housing. Provide cover plate and lifting holes for opening.

37 ✗ 11. Minimum service factor of 1.25 based on the continuous operating torque.

L. Turntable

38 ✗ 1. The turntable base shall have an annular bearing raceway upon which the rotating assembly rests using ball bearings. It shall have a maximum allowable deflection in accordance with the bearing specifications.

2. The allowable modulus of elasticity for the turntable material shall be a minimum of 29 x 10^6 psi.

3. The turntable base shall be a minimum 1 inch thick to insure adequate structural rigidity to properly support the drive bearing and gear.

4. Provide adequate sealing to prevent moisture from entering the drive.

✓ M. Main Bearing

1. Support the mechanism turntable on a ball bearing assembly that uses bearing balls of minimum 1/4-inch-diameter, Grade 50 AISI E52100 chrome alloy steel bearing balls, hardness 60-64 RC, conforming to ANSI/ABMA/ISO 3290 (R2000).

2. The ball bearing assembly has shall be mounted in an ASTM A48 Class 40 cast iron housing. The housing shall be cast as a single piece to provide a leak proof enclosure. The housing shall be complete with seals, oil level dipstick, oil fill, and valve oil and condensation drains. Or the main ball bearing assembly shall be a precision bearing manufactured from AISI 4140 Alloy Steel with minimum 1” diameter Grade 50 E52100 Chrome Alloy Steel Balls.

3. The upper dust and rain seal between the internal spur gear and the housing shall consist of a labyrinth seal fabricated from AISI 304 stainless steel with stainless steel seal clamps and EPDM rubber time seal. A neoprene dust and rain seal located between the internal spur gear and housing shall also be acceptable.

4. Use bearing balls that run in an oil bath.

   39 ✗ a. For oil bath lubricated bearings, provide bearings that run on replaceable carbon corrected, high carbon steel liners hardened to 38-46 Rockwell C as specified in ASTM E18 and placed in annular raceways in the gear and turntable base.

   b. Lubrication of the gear teeth shall be accomplished by means of an oil dam and the meshing action of the pinion and the internal gear teeth that shall force lubricant up the face of the teeth.

5. For drives using strip liner bearings, bearing designs in which bearing wear cannot be measured or which require the disassembly of the bearing or final gear reduction or dewatering of the collector basin to measure bearing wear will not be acceptable.

6. The drives shall be designed so that balls and nylons spacers can be replaced without removing the access walkway.

✓ N. Torque Overload Protection

40 ✗ 1. Provide an overload protection device and an overload alarm system for the drive mechanism.

2. Enclose overload device in a stainless steel, watertight housing.

41 ✗ 3. Mount switches used in the torque overload protection device in NEMA 250, Type 4X rated, Type 316 rated enclosures.

42 ✗ 4. Provide an indicator showing the load on the mechanism that is visible from the access bridge and reads in ft-lbs torque or percent continuous operating torque covering the range of torques specified up to 160% of the continuous operating torque.

5. Provide with three switches:

    43 ✗ a. One to activate the alarm (activate at 80% of the continuous operating torque).

    44 ✗ b. One to shut down the unit (activate the cutout switch at 110% of the continuous operating torque).

    c. One back-up switch to shut down the unit at 140% of the continuous operating torque in the event that the cutout switch is not operational.

        1) As an alternative to the back-up switch, a NEMA 4X limit switch may be provided to activate when the shear pin breaks.

    d. Relay signals from the overload switches to the local control panel, and the Owner’s PLC.

    e. Factory-calibrate all alarm switches.

6. Amperage sensing devices shall not be acceptable for torque overload protection.

7. Any exposed linkages shall be stainless steel.

8. In addition to alarm and cutoff, the drive unit is also protected by a shear pin.

45 ✗

2.06 ELECTRICAL COMPONENTS

A. Furnish and install field wiring required including properly sized wire, conduit, fittings and supports.

B. Furnish and install electrical items required but not specifically called for as furnished by the equipment manufacturer.

2.07 ACCESSORIES

✓ A. Anchor Bolts

1. The equipment manufacturer shall furnish all Type 316 stainless steel anchor bolts, nuts, washers and gaskets necessary for the equipment furnished.

B. Spare Parts

1. Spare parts shall be provided as follows:

    ✓ a. 1 set – all bearings and bearing ring seal rings for drive unit, except the main turntable bearing.

✓ b. 1 set – all gaskets for drive unit

46 ✗ c. 1 set – spur gear seal and replaceable bearing races

✓ d. 1 set – springs used in scum collection assemblies, flexible wipers and seals used in scum collection assemblies, and scum arm blade pivot bearing

47 ✗ e. 1 set – any special tools required to assemble, disassemble, or maintain the equipment.

✓ f. 1 year of lubricant supply

2.08 FABRICATION

✓ A. Shop Assembly and Inspection: Factory assemble the clarifier equipment as far as practical to verify that mating parts can be accurately field assembled. Trial fit mating parts and match-mark for field assembly. Submit certification of shop trial assembly and photographs of assembly before shipment. Notify the Owner, installing Contractor, and Engineer prior to the start of shop assembly to provide an opportunity to witness the shop assembly.

✓ B. Inspection: Shop inspection shall be performed by a qualified inspector and certified by the manufacturer. The inspection shall be documented and all deficiencies noted, corrected, re-inspected and final completion formally authorized. Final shipment authorization shall be by the manufacturer to ensure completion of all fabrication, assembly, and inspection requirements. Submit inspection records and evidence of inspector qualification as part of the submittals.

PART 3 - EXECUTION

3.01 PREPARATION

48 ✗ A. Prior to assembly of the drive unit, the castings shall have been sandblasted and thoroughly cleaned to remove any foreign particles in the drive base. After assembly, the drive mechanism shall be solvent cleaned and power wire brushed as needed prior to application of manufacturer's standard primer.

✓ 3.02 INSTALLATION

A. Align, connect, and install equipment in accordance with the manufacturer’s written instructions.

B. Use equipment shop drawings, anchorage layout drawings, and anchor bolt layout templates to accurately position anchor bolts.

C. Place the anchorage in accordance with certified prints supplied by the equipment manufacturer.

D. Install, position, and level the drive unit prior to grouting the center column in place.

E. Provide factory-trained personnel to check installation and test initial operation per Paragraph 3.04.

F. Coordinate the installation of the secondary clarifier components with the effluent weirs and baffles.

G. Certify installation and initial operation of all components on the appropriate forms included in Section 01999.

1. Manufacturer's Installation Certification
2. Instrumentation Data and Calibration Test Form
3. Extended Warranty Form

3.03 FILED QUALITY CONTROL (NOT USED)

3.04 MANUFACTURER'S FIELD SERVICES

✓ A. The equipment manufacturer shall provide the services of a field service representative for a total of two (2) trips for a total of not more than four (4) working days for the purpose of instruction and assisting the contractor and the Owner's personnel in the start-up and proper operations of the equipment.

✓ B. The equipment manufacturer shall furnish operating and maintenance instruction for the equipment to the contractor.

✓ C. Corrective Actions: Replace or repair work to eliminate defects, deficiencies and irregularities.

✓ D. Complete and submit the appropriate forms provided in Section 01999.

1. Manufacturer's Representative Service Report
2. Manufacturer's Instruction Certification
3. O&M Information Transmittal

3.05 EQUIPMENT AND SYSTEM TESTING

✓ A. Conduct testing under the supervision of the equipment manufacturer's service technician prior to beginning operational testing of the equipment.

✓ B. Corrective Actions: Replace or repair work to eliminate defects, deficiencies and irregularities.

C. Field Tests

1. Torque Testing

49 ✗ a. Statically load test the entire mechanism by individually loading each rake arm with 150 percent of the specified continuous operating torque.

✓ b. Verify that the torque overload control device settings for alarm and motor cutout meet the requirements herein.

50 ✗ c. Individually anchor each arm and measure the load to demonstrate the ability of the rake arm, drive cage and drive unit to withstand the test loading condition.

✓ d. Submit the proposed testing procedures, including sketches and calculations, for approval prior to the testing.

D. Functional Testing

✓ 1. Operate the clarifier mechanism in a dry tank and check that there is no binding, jerky, or unusual motion during the run-in period.

2. Check motor amperage for unusual or higher than normal values.

✓ 3. If the unit should fail under dry tank testing, stop testing and correct the problem(s).

✓ 4. Successful functional testing is required prior to beginning operational testing.

51 ✗ E. Coordinate with Section 01825 for any additional testing.

END OF SECTION

REVIEWED
SPECIFICATION 05520
HANDRAIL

ClearStream Environmental, Inc
9090 South 300 West, Sandy, UT 84070
801.676.1890 Phone │ 801.676.1893 Fax

REVIEWED SPECIFICATION 05520 05/27/2022

1. Clearstream (CSE) will provide stamped calculations after submittal approval so that any changes that occur during submittal process will not require calculations to be re-done and stamped. CSE asks if a Utah PE stamp can be used in lieu of Oregon PE stamp.
2. Not sure what is meant by samples. Will a picture be sufficient?
3. Peak to Peak, which CSE uses on the majority of our projects, has been tested to ASTM E935-13e1 and ASTM E985-00 (2006) but not ASTM 894.
4. CSE is not supply handrail to walls or other constructions besides CSE equipment.
5. CSE proposes the use of a vendor CSE has used on many projects, Peak to Peak.
6. Materials that will be used are; extruded aluminum: 60005A-T61, cast aluminum base mounts: alloy 535, aluminum mechanical fittings: 1070A-0; fasteners: 316 stainless steel.
7. CSE is not providing concrete or masonry installed handrail anchors.
8. CSE is providing component type handrail that will need to be cut, fit and riveted together in the field.
9. CSE is not providing welded handrail.
10. CSE is not providing concrete or masonry installed handrail anchors.
11. CSE is not providing a chain with eye, snap hook and staple across gaps formed by removable railing sections at locations indicated.
12. Handrail components are shipped in crates and should not be opened until installation is about to occur.
13. Not sure what is meant by this paragraph.
14. Stainless steel not used
15. The finish on the handrail will be 215-R1, architectural class 1, AA-M10C22A41, clear anodized.
16. CSE is not performing installation of handrail.
17. CSE is not performing installation of handrail.
18. Handrail is not providing concrete installed handrail.
19. CSE is not performing installation of handrail.

SECTION 05520

HANDRAIL

PART 1 - GENERAL

✓ 1.01 SECTION INCLUDES

A. Aluminum handrail.

✓ 1.02 REFERENCED SECTIONS

A. The following Section is referenced in this Section:

   1. Section 01330 – Submittals

✓ 1.03 PERFORMANCE REQUIREMENTS

A. Design railings to withstand structural loads indicated, determine allowable design working stresses of railing materials based on the following:

   1. Aluminum Handrails: 60 percent of minimum yield strength.

B. Structural Performance: Provide railings capable of withstanding the following loads and stresses:

   1. Handrails:
      a. Uniform load of 50 pounds per lineal foot applied in any direction.
      b. Concentrated load of 200 pounds applied in any direction.
      c. Uniform and concentrated loads need not be assumed to act concurrently.
   2. Top Rails of Guards:
      a. Uniform load of 50 pounds per lineal foot applied horizontally and concurrently with 100 pound load applied vertically downward.
      b. Concentrated load of 200 pounds applied in any direction.
      c. Uniform and concentrated loads need not be assumed to act concurrently.

C. Thermal Movement: Provide exterior railings that allow for thermal movements resulting from a change in surface temperature of 120 degrees.

D. Control of Corrosion: Prevent galvanic action and other forms of corrosion by insulating metals and other materials from direct contact with incompatible materials.

1.04 SUBMITTALS

✓ A. Comply with Section 01330.

✓ B. Product Data: Manufacturer's standard catalog data for mechanically connected railings.

✓ C. Shop Drawings: Include plans, elevations, sections, details, and attachments to other work.

1 ✗ D. Calculations: Structural analyses signed and sealed by the qualified professional engineer, licensed in the State of Oregon, responsible for their preparation.

2 ✗ E. Samples for selection of surface color or texture.

3 ✗ F. Product Test Reports: Based on evaluation of comprehensive tests performed by a qualified testing agency, according to ASTM E894 and ASTM E935.

✓ 1.05 QUALITY ASSURANCE

A. Source Limitations: Obtain each type of railing through one source from a single manufacturer.

4 ✗ 1.06 PROJECT CONDITIONS

A. Field Measurements: Verify actual locations of walls and other construction contiguous with railings by field measurements before fabrication. Indicate measurements on Shop Drawings.

PART 2 - PRODUCTS

5 ✗ 2.01 MANUFACTURERS

A. Manufacturers: One of the following or equal:

1. Aluminum Pipe and Tube Railings:
    - a. AlumaGuard Corp.
    - b. CraneVeyor Corp.
    - c. Blum, Julius & Co., Inc.
    - d. Moultrie Manufacturing Company.

✓ 2.02 METALS, GENERAL

A. Metal Surfaces, General: Provide materials with smooth surfaces, without seam marks, roller marks, rolled trade names, stains, discolorations, or blemishes.

B. Brackets, Flanges, and Anchors: Cast or formed metal of same type of material and finish as supported rails, unless otherwise indicated.

2.03 ALUMINUM

✓ A. Aluminum, General: Provide alloy and temper recommended by aluminum producer and finisher for type of use and finish indicated, and with not less than the strength and durability properties of alloy and temper designated below for each aluminum form required.

6 ✗ B. Extruded Bars and Tubing: ASTM B221, Alloy 6063-T5/T52.

✗ C. Extruded Structural Pipe and Round Tubing: ASTM B429, Alloy 6063-T6.

1. Provide Standard Weight (Schedule 40) pipe, unless otherwise indicated.

✗ D. Drawn Seamless Tubing: ASTM B210, Alloy 6063-T832.

✗ E. Plate and Sheet: ASTM B209, Alloy 6061-T6.

✗ F. Die and Hand Forgings: ASTM B247, Alloy 6061-T6.

✗ G. Castings: ASTM B26/B26M, Alloy A356.0-T6.

2.04 STAINLESS STEEL (NOT USED)

2.05 FASTENERS

✓ A. General: Provide the following:

1. Aluminum Railings: Type 316 stainless-steel fasteners

✓ B. Fasteners for Anchoring Railings to Other Construction: Select fasteners of type, grade, and class required to produce connections suitable for anchoring railings to other types of construction indicated and capable of withstanding design loads.

7 ✗ C. Anchors: Provide chemical or expansion-type anchors, fabricated from Type 316 stainless steel with capability to sustain, without failure, a load equal to six times the load imposed when installed in unit masonry and equal to four times the load imposed when installed in concrete, as determined by testing per ASTM E488 conducted by a qualified independent testing agency.

2.06 FABRICATION

✓ A. Fabricate railings to comply with requirements indicated for design, dimensions, member sizes and spacing, details, finish, and anchorage.

8 ✗ B. Assemble railings in the shop to greatest extent possible to minimize field splicing and assembly. Disassemble units as necessary for shipping and handling limitations. Clearly mark units for reassembly and coordinated installation. Use connections that maintain structural value of joined pieces.

✓ C. Cut, drill, and punch metals cleanly and accurately. Remove burrs and ease edges to a radius of approximately 1/32 inch unless otherwise indicated. Remove sharp or rough areas on exposed surfaces.

✓ D. Form work true to line and level with accurate angles and surfaces.

✓ E. Fabricate connections that will be exposed to weather in a manner to exclude water. Provide weep holes where water may accumulate.

✓ F. Cut, reinforce, drill, and tap to receive finish hardware, screws, and similar items.

✓ G. Connections: Fabricate railings with either welded or nonwelded connections, unless otherwise indicated.

9 ✗ H. Welded Connections: Cope components at connections to provide close fit, or use fittings designed for this purpose. Weld all around at connections, including at fittings.

1. Use materials and methods that minimize distortion and develop strength and corrosion resistance of base metals.

2. Obtain fusion without undercut or overlap.

3. Remove flux immediately.

4. At exposed connections, finish exposed surfaces smooth and blended so no roughness shows after finishing and welded surface matches contours of adjoining surfaces.

✓ I. Nonwelded Connections: Connect members with concealed mechanical fasteners and fittings. Fabricate members and fittings to produce flush, smooth, rigid, hairline joints.

✓ J. Form changes in direction by bending or by inserting prefabricated elbow fittings.

✓ K. Brackets, Flanges, Fittings, and Anchors: Provide wall brackets, flanges, miscellaneous fittings, and anchors to interconnect railing members to other work, unless otherwise indicated.

10 ✗ L. Provide inserts and other anchorage devices for connecting railings to concrete or masonry work. Fabricate anchorage devices capable of withstanding loads imposed by railings. Coordinate anchorage devices with supporting structure.

11 ✗ M. For removable railing posts, fabricate slip-fit sockets from stainless steel tube or pipe whose ID is sized for a close fit with posts; limit movement of post without lateral load, measured at top, to not more than one-fortieth of post height. Provide socket covers designed and fabricated to resist being dislodged.

1. Provide chain with eye, snap hook, and staple across gaps formed by removable railing sections at locations indicated. Fabricate from same metal as railings.

2.07 FINISHES, GENERAL

12 ✗ A. Protect mechanical finishes on exposed surfaces from damage by applying a strippable, temporary protective covering before shipping.

13 ✗ B. Appearance of Finished Work: Variations in appearance of abutting or adjacent pieces are acceptable if they are within one-half of the range of approved Samples. Noticeable variations in the same piece are not acceptable. Variations in appearance of other components are acceptable if they are within the range of approved Samples and are assembled or installed to minimize contrast.

14 ✗ C. Stainless Steel Finishes (NOT USED)

15 ✗ D. When polishing is completed, passivate and rinse surfaces. Remove embedded foreign matter and leave surfaces chemically clean.

PART 3 - EXECUTION

16 ✗

3.01 INSTALLATION, GENERAL

A. Fit exposed connections together to form tight, hairline joints.

B. Perform cutting, drilling, and fitting required for installing railings. Set railings accurately in location, alignment, and elevation; measured from established lines and levels and free of rack.

   1. Do not weld, cut, or abrade surfaces of railing components that have been coated or finished after fabrication and that are intended for field connection by mechanical or other means without further cutting or fitting.
   2. Set posts plumb within a tolerance of 1/16 inch in 3 feet.
   3. Align rails so variations from level for horizontal members and variations from parallel with rake of steps and ramps for sloping members do not exceed 1/4 inch in 12 feet.

C. Adjust railings before anchoring to ensure matching alignment at abutting joints.

D. Fastening to In-Place Construction: Use anchorage devices and fasteners where necessary for securing railings and for properly transferring loads to in-place construction.

17 ❌ 3.02 RAILING CONNECTIONS

A. Nonwelded Connections: Use mechanical or adhesive joints for permanently connecting railing components. Use wood blocks and padding to prevent damage to railing members and fittings. Seal recessed holes of exposed locking screws using plastic cement filler colored to match finish of railings.

B. Welded Connections: Use fully welded joints for permanently connecting railing components. Comply with requirements for welded connections in Part 2 "Fabrication" Article whether welding is performed in the shop or in the field.

C. Expansion Joints: Install expansion joints at locations indicated but not farther apart than required to accommodate thermal movement. Provide slip-joint internal sleeve extending 2 inches beyond joint on either side, fasten internal sleeve securely to 1 side, and locate joint within 6 inches of post.

18 ❌ 3.03 ANCHORING POSTS

A. For aluminum pipe railings, attach posts using fittings designed and engineered for this purpose.

B. Install removable railing sections, where indicated, in slip-fit metal sockets cast in concrete.

19 ❌ 3.04 PROTECTION

A. Protect finishes of railings from damage during construction period with temporary protective coverings approved by railing manufacturer. Remove protective coverings at time of Substantial Completion.

B. Restore finishes damaged during installation and construction period so no evidence remains of correction work.

END OF SECTION

(THIS PAGE LEFT BLANK INTENTIONALLY)

REVIEWED
SPECIFICATION 05530
ALUMINUM GRATING

ClearStream Environmental, Inc
9090 South 300 West, Sandy, UT 84070
801.676.1890 Phone │ 801.676.1893 Fax

ClearStream ENVIRONMENTAL

REVIEWED SPECIFICATION 05530 05/27/2022

1. Clearstream (CSE) will provide grating drawings with dimensions and weights and installation drawings with the O&M for approval.
2. Grating will be supported by walkway structure which is showed in the calculations portion of the submittal.
3. Calculations will be submit with O&M for approval.
4. CSE is providing grating with 1 ¼" depth and has a 0.259" deflection at a 439 pounds/sq. ft.
5. CSE is providing grating with 1 ¼" depth.
6. CSE is only providing grating for CSE equipment. Field dimensions are not applicable.
7. CSE proposes using "Grating Systems". Grating Systems is a vendor that CSE has used on many projects.
8. Not applicable
9. Not applicable
10. Not applicable
11. Not applicable
12. Not applicable
13. Not applicable
14. Not applicable
15. CSE is not installing grating.

SECTION 05530

ALUMINUM GRATING

PART 1 - GENERAL

✓ 1.01 SECTION INCLUDES

A. Aluminum grating and related appurtenances.

✓ 1.02 REFERENCED SECTIONS

A. The following Section is referenced in his Section:

1. Section 01330 – Submittals

1.03 SUBMITTALS

A. Comply with Section 01330.

1 ✗ B. Grating: Submit shop drawings for the fabrication and installation of grating. Include dimensions, weights of each section, materials of construction, fabrication details, and fasteners.

2 ✗ C. Grating Supports: Submit shop drawings showing support locations, dimensions, size and weight, and anchorage to the structure.

3 ✗ D. Submit calculations demonstrating gratings meet specified load-bearing and deflection requirements for each type of grating and for each span.

1.04 DESIGN REQUIREMENTS

A. Bearing Bars

✓ 1. Rectangular bars, 3/16-inch thick, or I-bar, 1/16-inch thick web with 1/4-inch thick flange.

4 ✗ 2. Bar Depth and Spacing: Minimum 2 inches, or as determined by manufacturer to enable grating to support 180 pounds per square foot uniform live load on entire grating area, using an extreme fiber stress of 12,000 pounds per square inch.

✓ a. Spacing Limitation: Not more than 1-3/8 inch center-to-center spacing between bearing bars.

✓ 3. Top Edges of Bearing Bars: Grooved or serrated.

✓ B. Maximum Deflection Under Specified Loading: 1/240 of grating clear span maximum.

✓ C. Spacing of Main Grating Bars (Bearing Bars): Maximum of 1-1/8 inches clear between bars.

✓ D. Cross Bars: Swaged or pressure locked to bearing bars at maximum 4 inch spacing.

5 ✗ E. Minimum Grating Depth: 2 inches.

6 ✗ 1.05 PROJECT CONDITIONS

A. Field Measurements: Verify actual locations of walls and other construction contiguous with gratings by field measurements before fabrication.

B. Coordinate installation of grating supports and grating frames. Furnish setting drawings and templates for installing anchors and items that are to be embedded in concrete or masonry.

PART 2 - PRODUCTS

2.01 ALUMINUM GRATING

7 ✗ A. Manufacturers: One of the following, or equal:

   1. Grating Pacific, Inc.
   2. McNichols Company.
   3. Seidelhuber Metal Produces, Inc., Grooved I-Bar.

✓ B. Types: Swage locked with rectangular aluminum bars or swage locked I-bar aluminum grating.

C. Materials of Construction

   ✓ 1. Material for Grating, Shelf Angles, and Rebates: 6061-T6 or 6063-T6 aluminum alloy, except cross bars may be 6063-T5 aluminum alloy.

   8 ✗ 2. Shelf Angle Concrete Anchors: Type 304 or Type 316 stainless steel.

   9 ✗ 3. Grating Rebate Rod Anchors: 6061-T6 or 6063-T6 aluminum alloy.

D. Fabrication: Fabricate grating to cover areas indicated on the Drawings.

   ✓ 1. Fabricate grating in sections that are not wider than 3 feet and do not weigh more than 50 pounds.

   ✓ 2. Design sections to enable installation and subsequent removal of grating around protrusions or piping.

      10 ✗ a. Make cutouts in grating where required for equipment access or protrusion, including valve operators or stems, and gate frames.

      11 ✗ b. Openings 6 inches and Larger: Lay out grating panels with edges of 2 adjacent panels located on centerline of opening.

      12 ✗ c. Openings Smaller than 6 Inches: Locate opening at edge of single panel.

E. Banding: Band ends of each grating section and around cutouts.

   ✓ 1. End Banding: 1/8-inch less than height of grating, with top of grating and top edge of banding flush.

   ✓ 2. Cutout Banding: Full depth of grating.

   ✓ 3. Banding Material: Same material as grating.

13 ❌ F. Hold-down Clips: Where an area requires more than 1 grating section to cover an area, clamp adjacent grating sections together at ¼ points with stainless steel hold-down clips of the shape indicated on the Drawings.

14 ❌ 2.02 GRATING SUPPORTS

A. Seat Angles, Rebates and Beams

1. Use same material as grating, coordinate depth and dimension with grating depth, including serrations.
2. Coat surfaces in contact with concrete with zinc rich primer.
    a. Manufacturers: One of the following or equal:
        1) Benjamin Moore, Epoxy Zinc-Rich Primer CM18/19.
        2) Carboline Company, Carbozinc 621.
        3) Sherwin Williams Company, Corothane I GalvaPac Zinc Primer.
        4) Tnemec Company, Tneme-Zinc 90-97.
3. Horizontal bearing leg of seat angles and rebates: 2 inches minimum.
4. Allow 1/8 inch clearance between ends of grating and inside face of vertical leg of seat angles and rebates.
5. Grind sheared edges and welds to make smooth.

PART 3 - EXECUTION

15 ❌ 3.01 INSTALLATION

A. Install grating as indicated on the Drawings and in accordance with shop drawings.

B. Install supports to provide solid support and even bearing of grating sections such that grating does not rock or wobble and movement does not occur under the design loading condition.

C. Top surfaces of grating sections adjacent to each other shall line in same plane.

D. Install aluminum plate or angles where necessary to fill openings at changes in elevation and at openings between equipment and grating.

E. Install angle stops at ends of grating to prevent grating from sliding out of rebate or off support.

END OF SECTION

(THIS PAGE LEFT BLANK INTENTIONALLY)

REVIEWED
SPECIFICATION 11000
GENERAL
REQUIREMENTS

ClearStream Environmental, Inc
9090 South 300 West, Sandy, UT 84070
801.676.1890 Phone │ 801.676.1893 Fax

REVIEWED SPECIFICATION 11000 05/27/2022

1. Clearstream (CSE) provided a Unity Responsibility form but section 11338 2.06 and section 11338 2.05.N.5.D do not apply to CSE scope of supply and unit responsibility.
2. Steel equipment will be shipped most likely on a flat bed truck exposed to weather. Buy out parts will be crated.
3. Not applicable.
4. Not applicable.
5. Not applicable.
6. Not applicable.
7. Not applicable.
8. Not applicable.
9. No special tools required. Not applicable.
10. Not appliable.
11. CSE is not installing equipment.

SECTION 11000

GENERAL REQUIREMENTS FOR EQUIPMENT

PART 1 - GENERAL

✓ 1.01 SECTION INCLUDES

A. General requirements applicable to mechanical equipment and systems.

B. Ensure mechanical equipment meets the requirements of this Section in addition to the specific requirements of the individual equipment specification Sections.

✓ 1.02 REFERENCED SECTIONS

A. The following Sections are referenced in this Section

1. Section 01330 – Submittals
2. Section 01782 – Operation and Maintenance Information
3. Section 01825 – Equipment and System Testing
4. Section 01999 – Reference Forms
5. Section 10020 – Warning Signs
6. Section 11338 – Circular Secondary Clarifier Equipment

✓ 1.03 GENERAL REQUIREMENTS

A. Equipment shall be of new construction and comply with the following requirements:

1. Designed for all stresses that may occur during fabrication, transportation, erection, and during continuous or intermittent operations.
2. Adequately anchored, leveled, aligned, and ready for operation without binding or overloading of critical components or motors.
3. Installed with necessary appurtenances required for proper operation and installation in a neat and workmanlike manner.
4. Tested by factory trained service mechanics or engineers.

1 ✗ 1.04 UNIT RESPONSIBILITY

A. Equipment systems shall be assembled as a unit by a single manufacturer responsible for the entire unit.

1. Responsibility extends to selecting components of the system to assure compatibility, proper operation, and compliance with specified performance requirements.
2. Unit responsibility does not relieve Contractor of responsibility to Owner for performance of the Work.

✓ 1.05 QUALITY ASSURANCE

A. Arrangement

1. The arrangement of equipment shown on the Drawings is based upon information available at the time of design and is not intended to show exact dimensions peculiar to a specific manufacturer.

2. Some features of the illustrated equipment installation may require revision to meet actual equipment installation requirements.

3. Structural supports, foundations, connected piping, and valves shown may have to be altered to accommodate the equipment provided. Additional payment will not be made for such revisions and alterations.

B. Balance: Fully assemble all rotating elements in motors, pumps, blowers and centrifugal compressors before performing static and dynamic balance. Where specified, submit balancing reports, demonstrating compliance with this requirement.

✓ 1.06 SUBMITTALS

A. Comply with Section 01330.

B. General: Provide separate submittals for each equipment item or group of related equipment items.

C. Equipment Anchorage: Submit anchor bolt sizing calculations.

D. Bearing Life Calculations: Submit bearing L-10 life calculations in accordance with AFBMA requirements.

✓ 1.07 OPERATION AND MAINTENANCE MANUALS

A. Furnish operation and maintenance manuals for each equipment system in accordance with the Section 01782 requirements.

2 ✗ 1.08 PROTECTION DURING SHIPMENT

A. Shipping: Ship equipment in sealed, weather-tight, enclosed conveyances, and protected against damaging stresses during transport and handling.

B. Bearing Housings: Wrap or otherwise seal to prevent contamination by grit and dirt, and tape closed ventilation and other types of openings.

C. Repair any damaged materials to conform to the requirements of the Contract before the assembly is incorporated into the Work. The Contractor shall bear the costs arising out of dismantling, inspection, repair, and reassembly.

PART 2 - PRODUCTS

3 2.01 PIPING CONNECTIONS ON EQUIPMENT

A. Flanges on Equipment: Conform to dimensions and drilling specified in ANSI B16.1, Class 125 unless otherwise required by Division 15 pipe specifications or the Drawings.

B. Pipe Flanges: Conform to dimensions and drilling specified in AWWA C207, Class D, 125 lb flanges provided on connection pipe.

C. Threaded Flanges: Flat faced with standard taper pipe thread conforming to ANSI B1.20.1.

D. Pipe Threads: Conform in dimension and limits of size to ANSI B1.1, coarse thread series, Class 2 fit.

E. Flange Assembly Bolts and Nuts

1. Heavy pattern, hexagonal head, carbon steel machine bolts with heavy pattern, hot pressed, hexagonal nuts conforming to ANSI B18.2.1 and B18.2.2.

2. Threads: Unified Screw Threads, Standard Coarse Thread Series, Class 2A and 2B, ANSI B1.1.

4 2.02 BEARINGS

A. Service: Unless otherwise specified, equipment bearings shall be oil or grease lubricated, ball or roller type, designed to withstand the stresses of the service specified.

B. Rating

1. L-10 Rating Life: Minimum 50,000 hours unless otherwise specified. Determine rating life using the maximum equipment operating speed.

2. Determine rating in accordance with the latest revisions of AFBMA Methods of Evaluating Load Ratings of Ball and Roller Bearings.

3. Where individual equipment Sections specify higher bearing life ratings, those requirements supersede the minimum bearing life specified above.

C. Grease Lubricated Bearings

1. Fit with easily accessible grease supply, flush, drain and relief fittings, except those bearings specified to be factory sealed and lubricated.

2. Extend non-accessible grease fittings to an easily accessible location using 1/4-inch diameter stainless steel tubing as an extension tube.

3. Grease supply fittings: Standard hydraulic Alemite or Zerk type.

D. Oil Lubricated Bearings

1. Equip with either a pressure lubricating system or a separate oil reservoir type system.

  2. Size oil lubrication systems to safely absorb the heat energy normally generated in the bearing under a maximum ambient temperature of 60°C.
  3. Equip with a filler pipe and an external level indicator gage.

E. Incorporate bearing housings with sufficient cooling to maintain surface temperature at 65 degrees C or less for continuous operation at bearing rated load and a 50 degrees C ambient temperature, or install appropriate shielding on bearings that are accessible to touch.

F. Bearing Isolators
  1. Provide for bearing where the shaft exits the bearing housing.
  2. Motor Bearings: Provide Inpro/Seal style VBX vapor blocking isolators.
  3. Gears: Provide Inpro/Seal “Double Runner” bearing isolator for shafts exiting the gear casing.
  4. Pumps, Blowers and Compressors: Provide Inpro/Seal style VBX blocking bearing isolators where shafts exit casings/housings.
  5. Pillow Block Bearings: Provide Inpro/Seal “Pop-In” style bearing isolators.

5 ❌ 2.03 DRIVE COMPONENTS

A. V-Belt Drives
  1. Design with sliding base or other suitable tension adjustment.
  2. Design with service factor of at least 1.6 at maximum speed.
  3. Statically balance sheaves. In addition, dynamically balance sheaves that will operate at peripheral speed of more than 5,500 feet per minute.
  4. Belts: Provide anti-static belts when explosion-proof equipment or environment is specified.

B. Gear Reducers
  1. Provide drives with nominal input horsepower rating equal to or greater than the nameplate horsepower of the drive motor.
  2. Provide gear drives manufactured in accordance with AGMA Class II service requirements.

6 ❌ 2.04 SHAFT COUPLINGS

A. Type and Rating: Non-lubricated, designed for a minimum of 50,000 hours operating life.

B. Equipment with a driver greater than 1/2 horsepower, and where the input shaft of a driven unit is directly connected to the output shaft of the driver, shall have its two shafts connected by a flexible coupling which can accommodate angular misalignment, parallel misalignment and end float, and which cushions shock loads and dampens torsional vibrations.

C. Provide couplings recommended by the coupling manufacturer for the specific application, considering horsepower, speed of rotation, and type of service.

D. Install couplings in conformance to the manufacturer's instructions.

7 ✗ 2.05 GUARDS AND CAUTION SIGNS

A. Guards

1. Enclose exposed moving parts with guards that meet the requirements of federal and state OSHA requirements.
2. Enclose drive shafts to at least 7 feet above floors or operating platforms.

B. Materials

1. Fabricate guards of 14 gauge steel and expanded metal screen to provide visual inspection of moving parts without removal of the guard.
2. Galvanize after fabrication and paint with the equipment.
3. Fasteners: Type 304 stainless steel.

C. Warning Sign

1. Provide warning signs near equipment with moving parts that operate automatically or by remote control.
2. Provide warning signs with wording, size and colors specified in Section 10020.

8 ✗ 2.06 PRESSURE TAPS AND GAUGES (NOT USED)

✓ 2.07 NAMEPLATES

A. Nameplates

1. Provide on each item of equipment with the specified equipment name or abbreviation and equipment number.
2. Engrave or stamp (not painted) on stainless steel and fastened to the equipment in an accessible location with stainless steel screws or drive pins.

✓ 2.08 SPARE PARTS AND LUBRICANTS

A. Spare Parts: Provide for each item of mechanical, electrical, and instrumentation equipment a supply of spare parts and special tools required for the starting, testing, adjustments, and initial operation. Pack spare parts required by individual equipment specifications:

1. Pack spare parts with individual weights less than 50 pounds in a heavily constructed painted wood box with hinged cover and a locking clasp.
2. Provide a typed inventory of spare parts stapled to the underside of the cover.

3. Tag and wrap each part in a waterproof container. Spare bearings shall be encapsulated in an airtight plastic film.

B. Lubricants: Provide for each item of mechanical equipment of the type recommended by the equipment manufacturer a supply of the lubricant for startup, testing, and initial operation.

1. Provide a list showing the required lubricants for each item of mechanical equipment. List estimated quantity of lubricant needed for a full year's operation, assuming the equipment will operate continuously.
2. Lubricants shall be products of the Owner's current lubricant supplier.
3. Limit the various types of lubricants by consolidating them, with the equipment manufacturer's approval, into the least number of different types.

✓ 2.09 ANCHOR BOLTS

A. See Section 11338.

✓ 2.10 FACTORY APPLIED COATINGS

A. Ship each item of equipment to the site of the work with a shop applied prime coating.

B. Finish Painting of Motors: Factory-apply finish coats using manufacturer's standard coating.

9 ✗ 2.11 SPECIAL TOOLS AND ACCESSORIES

A. Furnish with each piece of equipment all tools, instruments, or accessories of a special nature that are required to assemble, disassemble, maintain, or repair any item of equipment.

1. Tag and mark each piece indicating their service and the piece of equipment for which their use is intended.
2. Include a list and description or pictorial representation of all special tools required for a given piece of equipment for insertion into the equipment operation and maintenance manual.

10 ✗ 2.12 FASTENERS AND DIELECTRIC ISOLATION

A. Fasteners for Aluminum: Stainless steel.

B. Isolate steel surfaces, other than stainless steel, from aluminum with stainless steel, neoprene, non-metallic washers or other acceptable material.

C. Dissimilar Metals: Protect from galvanic corrosion by means of pressure tapes, coatings, or isolators.

PART 3 - EXECUTION

11 ✗ 3.01 INSTALLATION

A. Install, align and test each item of equipment within the tolerances recommended by the equipment manufacturer.

B. When specified in individual Sections, install and test equipment under the direction of installation engineers who have been factory trained by the equipment manufacturer.

C. Perform all work in accordance with manufacturer's recommendations.

✓ 3.02 QUALITY CONTROL

A. Test equipment in accordance with Section 01825 and the individual equipment Section.

B. Furnish written certification from the equipment manufacturers that each item has been installed, aligned, and tested correctly and that the installation meets the manufacturer's requirements for efficient, trouble-free operation. Utilize Manufacturer’s Installation Certification Form provided in Section 01999.

C. Equipment manufacturer’s certification shall not be construed as relieving the Contractor of his overall responsibility for this portion of the work.

END OF SECTION

(THIS PAGE LEFT BLANK INTENTIONALLY)

REVIEWED
SPECIFICATION 11060
ELECTRIC MOTORS

ClearStream Environmental, Inc
9090 South 300 West, Sandy, UT 84070
801.676.1890 Phone │ 801.676.1893 Fax

REVIEWED SPECIFICATION 11060 05/27/2022

1. Clearstream (CSE) has supplied a one year warranty on all drive components.
2. NORD gearmotor utilizes an aluminum framed motor.
3. NORD motor utilizes a plastic non-sparking fan
4. Not applicable.
5. Motor is ¾ HP motor. IEEE841 motors are available in 1 hp and larger
6. Not applicable.
7. Not applicable.
8. Not applicable.
9. Not applicable.
10. Not applicable.
11. Not applicable.
12. Not applicable. Motor is attached to drive.
13. Not applicable.
14. Not applicable.

SECTION 11060

ELECTRIC MOTORS

PART 1 - GENERAL

✓ 1.01 SECTION INCLUDES

A. Low-voltage alternating current induction motors, 250 horsepower or less.

B. This section does not specify medium voltage (over 600 volts) motors and specialty motors such as submersible motors, hoist motors, valve operator motors or torque rated motors.

C. Unless specified otherwise, require electric motors to be provided by the manufacturer of the driven equipment per of Section 11000.

D. Unless specified otherwise in the particular equipment specifications, comply with these specifications.

✓ 1.02 REFERENCED SECTIONS

A. The following Sections are referenced in this Section

1. Section 01330 – Submittals
2. Section 01782 – Operation and Maintenance Information
3. Section 01999 – Referenced Forms
4. Section 11000 – General Requirements for Equipment

✓ 1.03 QUALITY ASSURANCE

A. Unit Responsibility

1. Comply with Section 11000.
2. Unless otherwise specified, assign unit responsibility for motors to the individual manufacturers of the driven equipment.

B. Product Delivery, Storage, and Handling

1. Comply with manufacturer’s recommendations.

C. Basic Standards

1. Manufacture per UL 674, UL 1004, NEMA Standard MG 1, and the requirements specified.

✓ 1.04 ENVIRONMENTAL CONDITIONS

A. Refer to individual equipment sections and drawings for installation locations.

✓ 1.05 SUBMITTALS

A. Comply with Section 01330.

B. Include a copy of the contract document control diagrams and process and instrumentation diagrams, with addenda updates, that apply to the equipment in this section.

  1. Mark to show specific changes necessary for the equipment proposed in the submittal.
  2. If no changes are required, mark the drawing or drawings “No Changes Required”.
  3. Failure to comply with this paragraph is sufficient cause to reject the entire submittal.

C. Include the following items:

  1. Completed Motor Data Form (Section 01999).
  2. For motors 100 horsepower and larger, a motor heating curve.
  3. Motor outline, dimensions, and weight.
  4. Manufacturer's descriptive information relative to motor features.
  5. Where a winding over-temperature device is required, provide a response curve for the temperature device.
  6. For all inverter duty motors, the motor manufacturer's certification that the motor is compatible with the adjustable frequency drive to be used with the motor as specified in this section.
  7. Motor performance data showing motor full load current, efficiency, and power factor for the motor operating at 25, 50, 75, 100 and 125 percent of full load.
  8. Operating and maintenance information specified in Section 01782.
  9. Overhaul instructions for each motor 5 horsepower and above.

✓ 1.06 DESIGN REQUIREMENTS

A. NEMA “B” design, unless otherwise specified.

B. NEMA Class B temperature rise above 40 degrees C ambient.

1.

✗ 1.07 WARRANTY

A. Provide two year warranty from date of substantial completion unless manufacturer’s standard warranty is longer.

B. Complete the Extended Warranty Form in Section 01999.

PART 2 - PRODUCTS

2.01 MANUFACTURERS

A. General

1. The Owner and Construction Manager believe the following candidate manufacturers are capable of producing equipment and/or products that will satisfy the requirements of this section.

2. Do not construe the preceding statement, as an endorsement of a particular manufacturer's products or that named manufacturers' standard equipment or products will comply with the requirements of this section.

3. The below listed manufacturer's motors generally meet the class and performance requirements of this specification when furnished with appropriate modifications and additional features as specified.

B. Horizontal Motors

1. Types 1 and 2 – Premium efficiency motors manufactured by General Electric Inc., Type KS; and Reliance Electric Co., Type XEX, or equal.

2. Type 3 – Premium efficiency explosionproof motors manufactured by General Electric Inc., Type KS, Class I, Group D; and Emerson US Motor, Type LCE, or equal.

✓ C. Vertical Motors

1. Types 1 and 2 – Premium efficiency motors manufactured by General Electric Inc., Type KS; and Emerson US Motors, Type TUCE Corroduty, or equal.

2. Type 3 – Premium efficiency explosionproof motors manufactured by General Electric Inc., Type KS, Class I, Group D; and Emerson US Motors, Type LUCE, or equal.

D. Inverter Duty Motors

1. Baldor, Inverter Motor; General Electric, ASD; Reliance, RPM-AC (XT) and US Motors Varidyne Inverter Duty, or equal.

✗ 2.02 MATERIALS

2 A. Cast iron frames for motors 1/2 horsepower and larger. Steel frames for motors smaller than 1/2 horsepower. Aluminum frame motors will not be permitted.

3 B. Cast metal fan blades and shrouds.

C. Stainless steel hardware.

D. Nonhygroscopic leads.

✓ 2.03 NAMEPLATES

A. Material: Engraved or stamped stainless steel or brass.

B. Information: Include items listed in NEMA Standard MG 1, Paragraph 10.37, 10.38 or 20.60, as applicable.

C. For motors 1/2 horsepower and larger, indicate the ABMA L-10 rated life for the motor bearings.

D. For motors 2 horsepower and larger, list the nominal efficiency.

E. For explosionproof motors, indicate UL frame temperature limit code.

F. Permanently fasten to the motor frame and position for easy visible inspection.

4 ✗

2.04 MOTORS LESS THAN 1/2 HORSEPOWER

A. General

1. Type: Squirrel cage, single phase, capacitor start, induction run type.
2. The equipment manufacturer may provide normally supplied materials in lieu of those specified in Paragraph 2.02
3. For single phase motors provide Class B insulation.
4. Small fan motors may be split-phase or shaded-pole type.
5. Provide with copper windings.

B. Rating

1. 115 volts, single phase, 60 hertz.
2. Continuous-time rated per NEMA Standard MG 1, Paragraph 10.35.
3. Nonoverloading at all points of the equipment operation.

C. Enclosures

1. Comply with NEMA MG 1.
2. Unless otherwise specified, provide totally enclosed fan cooled or totally enclosed nonventilated enclosures.
3. Explosion Proof Motors
    a. Furnish with UL Label for Class I, Division 1, Group D hazardous locations.
    b. Provide an over temperature device in the enclosure to detect and automatically de-energize the motor if the enclosure surface temperature exceeds 260 degrees C.
    c. Mark nameplate with UL frame temperature limit code T2B.

2.05 MOTORS 1/2 HORSEPOWER THROUGH 250 HORSEPOWER

✓ A. General

1. Type: Three phase, squirrel cage, full voltage start induction type.
2. Unless otherwise specified, provide a NEMA MG 1-1.16 design for the duty service imposed by the driven equipment such as frequent starting,

intermittent overload, high inertia, mounting configuration, or service environment.

✓ B. Rating

1. 460 volts, three phase, 60 Hz.
2. Continuous time rated per NEMA Standard MG 1, paragraph 10.40.
3. Unless specified otherwise, provide a service factor of 1.15, but size not to exceed the nameplate rating at any point on the operating curve (non-overloading) of the driven equipment.

C. Classifications

✓ 1. General:
    a. Comply with the requirements specified in the following paragraphs.
    b. Definition of terms: Per NEMA MG 1.
    c. Temperature rise: for all motor types, do not exceed that permitted by Note II, paragraph 12.42, NEMA MG 1. The insulation shall be nonhygroscopic.

2. Type 1 Motors:
    a. Drip-proof guarded enclosures
    b. Class F insulation and Class B temperature rise at the motor's nominal rating.

✓ 3. Type 2 Motors:
    a. Totally enclosed, fan cooled.
    b. Class F insulation and Class B temperature rise at the motor's nominal rating.
    5 c. Conform to IEEE 841.
    d. Coat all internal surfaces with an epoxy paint.

4. Type 3 Motors
    a. Explosion proof motors, UL listed per UL 674 for Class I, Group D hazardous atmospheres.
    b. Class F insulation.
    c. Conform to IEEE 841.
    d. Provide UL-approved breather/drain device in the motor drain hole.
    e. Provide a frame temperature thermostat which meets the UL frame temperature limit code T2B (260 degrees C). Include automatically reset, normally closed contact rated 2 amperes at 115 volts AC.

6 ✗ D. Thermal Protection

1. Unless specified otherwise, provide thermal protection as defined in NEMA MG 1-12.53.1, as follows:

Motor type	Thermal Protection	
	Type 2 - Thermostats	Type 1 - RTDs
Noninverter duty	50-150 HP	200-250 HP
Inverter duty	1-60 HP	75-250 HP

2. Provide thermal protection in each stator winding.
   a. Thermostats: Bimetallic switch type, self-resetting.
   b. Resistance temperature detectors (RTDs): 10-ohm copper type (two per phase).
   c. On larger frame sizes where the motor manufacturer does not offer copper type RTDs, provide 100-ohm platinum type (two per phase).
3. For explosion proof motors, provide the motor winding thermal protection as specified above in addition to the motor frame thermostat specified in Paragraph 2.05.c.4.e.

7 ✗ E. Inverter Duty Motors

1. Use with adjustable frequency controllers employing Pulse Width Modulation (PWM) technology.
2. Do not exceed NEMA MG 1, Class B, temperature rise when operating over the specified speed range on the specified load speed/torque characteristics required by the associated driven equipment
3. Provide certification from the motor manufacturer of compatibility with the adjustable frequency controller to be used with the motor.
4. Designed to operate over the speed or frequency range specified.
5. Insulation: Meet NEMA MG 1, Part 31 (1600 volt peak at a minimum of 0.1 microsecond rise time).
6. Provide with thermal protection as specified above.
7. Provide Grounding Unit
   a. Provide with a shaft grounding unit mounted on the fan housing with stub shaft extended from the motor shaft.
   b. Equip with two brushes, totally enclosed and sealed against environmental contamination.
   c. Exception: Grounding unit and brushes not required for vertical turbine pumps.
8. Totally Enclosed, Air-Over, Blower-Cooled (TEBC) Type
   a. Provide where specified or required by the specified application requirements.
   b. Blowers: Driven at constant speed by 460-volt, 3-phase motors meeting Type 2 requirements specified in Paragraph 2.04 C.3.
   c. Manufacture blower and ducting as an integral part of the main motor frame.

d. Provide air intake filter.

e. Construct scroll case of cast aluminum or iron, and fan wheel of Type 304 stainless steel.

9. Inverter duty motors may be NEMA MG1-1.16, design A.

8 F. Vertical Motors

1. Provide solid-shaft P-base type specifically designed for vertical installation.

2. Universal position motors are not acceptable.

3. Comply with Type 2, Type 3, and/or Inverter Duty Motor requirements as specified.

4. Thrust bearing rating: Demonstrate compatibility with the loads imposed by the driven equipment.

9 G. Minimum Nameplate Efficiency

1. Determine per IEEE 112B testing procedures, when operating on a sinusoidal power source.

2. Comply with the following:

Motor Horsepower	Motor Minimum Efficiency, percent			
	900 rpm	1200 rpm	1800 rpm	3600 rpm
1	72.0	82.5	83.0	84.0
1.5	75.5	84.0	85.0	84.0
2	81.5	85.5	82.5	82.5
3	86.5	88.5	89.5	87.5
5	87.5	89.5	89.5	89.1
7.5	88.5	91.0	91.7	90.2
10	89.5	91.1	91.7	91.0
15	89.8	91.7	92.4	91.7
20	90.2	91.7	93.0	91.7
25	91.0	92.4	93.5	92.0
30	91.0	93.0	93.6	92.4
40	91.7	93.6	94.1	93.0
50	92.4	93.6	94.1	93.0
60	93.0	93.9	94.5	93.6
75	93.0	94.5	95.0	94.1
100	93.6	94.5	95.4	94.5
125	94.5	94.5	95.4	94.9
150	94.5	95.4	95.8	95.0
200	94.5	95.4	95.8	95.4
250	94.5	95.4	95.8	95.4

10 ✗ H. Conduit Boxes

1. Type: Cast iron, split construction with threaded hubs.
2. Conform to IEEE 841.
3. Furnish at least one size larger than NEMA standard for the given motor size.
4. Design to rotate in order to permit installation in any of four positions 90 degrees apart.
5. Furnish with petroleum-resistant gaskets at the base of the conduit box and between the halves of the conduit box.
6. Provide grounding lug located within the box for the ground connection.
7. Minimum length of pigtail leads:
    a. 12 inches for motors up to 50 horsepower.
    b. 16 inches for motors larger than 50 to 250 horsepower.

11 ✗ I. Bearings

1. Type: Oil or grease lubricated ball or angle contact roller bearings.
2. Rating: Minimum L-10 life of 100,000 hours per ABMA 9 or 11 at the ambient temperature specified.
3. Motor designs employing cartridge type bearings will not be accepted.
4. Fit with lubricant fill and drain or relief fittings.

12 ✗ J. Lifting Eyes

1. Fit motors weighing more than 50 pounds with at least one lifting eye.

✓ K. Current Imbalance

1. Base upon the lowest value measured.
2. Do not exceed the values tabulated below when the motor is operating at any load within its service factor rating and is supplied by a balanced voltage system:
    a. Under 5 horsepower: 25 percent
    b. 5 horsepower and above: 10 percent

13 ✗ L. Space Heaters

1. Where specified, size and design to prevent condensation inside the motor enclosure after shutdown.
2. Type: Cartridge or flexible wraparound type.
3. Power Requirements: 120 volts, single phase, 60 Hz.
4. Mark the rating in watts and volts on the motor nameplate or on a second nameplate.

5. Bring terminals to a separate terminal block or to pigtails in the conduit box.

PART 3 - EXECUTION

14

3.01 TESTING

A. Perform winding insulation resistance and current imbalance testing as specified in Division 16.

B. Test for correct rotation during preoperational checkout.

END OF SECTION

(THIS PAGE LEFT BLANK INTENTIONALLY)

NOTE:

SCUM BOX (FS.180) TO BE ALIGNED W/ ANTI-ROTATIONBALLLE.

SCUM BOX BAFFLE IN ASSEMBLY (WB.190) MUST START 10' IN FROUNT OF SCUM BOX.

KEY:

(X.XXX) = PARTS

◇FXXX◇ = FASTENERS

REV.	DESCRIPTION	DRAWN	APPROV.	DATE
A	ADDED FEEDWELL SUPPORT BRACE	SEB	TSH	12/1/2022
0	INITIAL RELEASE	JSM	TSH	9/22

ClearStream ENVIRONMENTAL
9090 SOUTH 300 WEST
SANDY, UT 84070
OFFICE: (801) 676-1890
FAX: (801) 676-1893

PROPRIETARY AND CONFIDENTIAL

THE INFORMATION CONTAINED IN THIS DRAWING IS THE SOLE PROPERTY OF CLEARSTREAM ENVIRONMENTAL. ANY REPRODUCTION IN PART OR AS A WHOLE WITHOUT THE WRITTEN PERMISSION OF CLEARSTREAM ENVIRONMENTAL IS PROHIBITED.

UNLESS OTHERWISE SPECIFIED:
DIMENSIONS ARE IN INCHES
WEIGHTS ARE IN LBS
TOLERANCES (I.A.W. AWS D1.1, AISC CODE OF STD PRACTICE):
FRACTIONAL: ±1/8"
HOLE LOCATION: ±1/32"

MATERIAL: N/A
WEIGHT EACH: N/A
NUMBER OF MECHANISMS:
TOTAL WEIGHT: N/A

	NAME	DATE
DRAWN	JSM	10/22
CHECKED	BKH	10/22
ENG APPR.	TSH	10/22
FAB INSP.		

DO NOT SCALE DRAWING
MODEL NUMBER: CCSO.085
DESIGNATION: FI17.S4.MSWT

COTTAGE GROVE

TITLE:
ERECTION DRAWING
ISOMETRIC VIEW

SIZE D
DWG. / PART NO. 110
REV A
SCALE: 1:30
SHEET 1 OF 3

D 22-008 REV A

DETAIL B

DETAIL A

DETAIL E

KEY:

X.XXX = PARTS

FXXX = FASTENERS

ClearStream ENVIRONMENTAL
9090 SOUTH 300 WEST
SANDY, UT 84070
OFFICE: (801) 676-1890
FAX: (801) 676-1893

PROPRIETARY AND CONFIDENTIAL

THE INFORMATION CONTAINED IN THIS DRAWING IS THE SOLE PROPERTY OF CLEARSTREAM ENVIRONMENTAL. ANY REPRODUCTION IN PART OR AS A WHOLE WITHOUT THE WRITTEN PERMISSION OF CLEARSTREAM ENVIRONMENTAL IS PROHIBITED.

UNLESS OTHERWISE SPECIFIED:
DIMENSIONS ARE IN INCHES
WEIGHTS ARE IN LBS
TOLERANCES (I.A.W. AWS D1.1, AISC CODE OF STD PRACTICE):
FRACTIONAL: ±1/8"
HOLE LOCATION: ±1/32"

MATERIAL: N/A

WEIGHT EACH:

NUMBER OF MECHANISMS:

TOTAL WEIGHT:

	NAME	DATE
DRAWN	JSM	10/22
CHECKED	BKH	10/22
ENG APPR.	TSH	10/22
FAB INSP.		

DO NOT SCALE DRAWING

MODEL NUMBER: CCSO.085

DESIGNATION: FI17.S4.MSWT

COTTAGE GROVE

TITLE:

ERECTION DRAWING
ISOMETRIC VIEW

SIZE D
DWG. / PART NO. 110
REV A

SCALE: 1:35
SHEET 2 OF 3

REV A
22-008
D

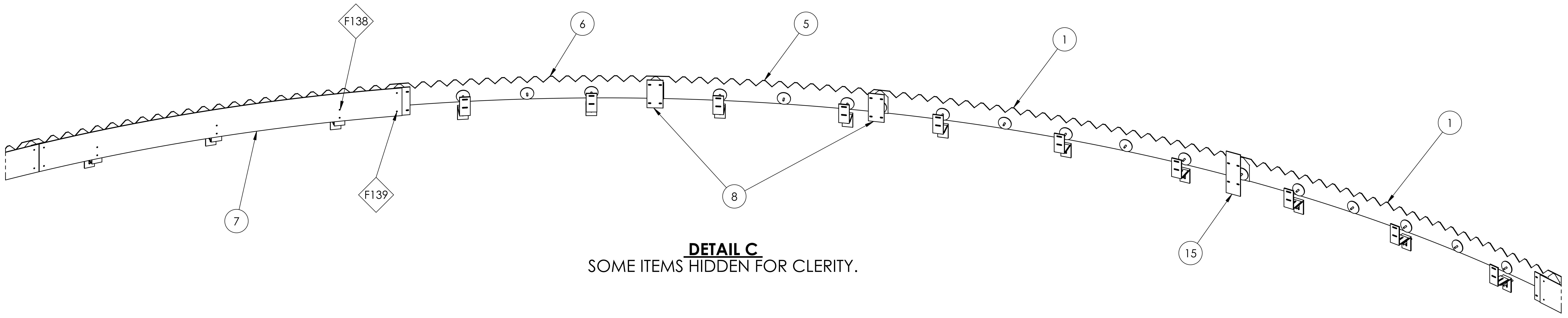

DETAIL C
SOME ITEMS HIDDEN FOR CLERITY.

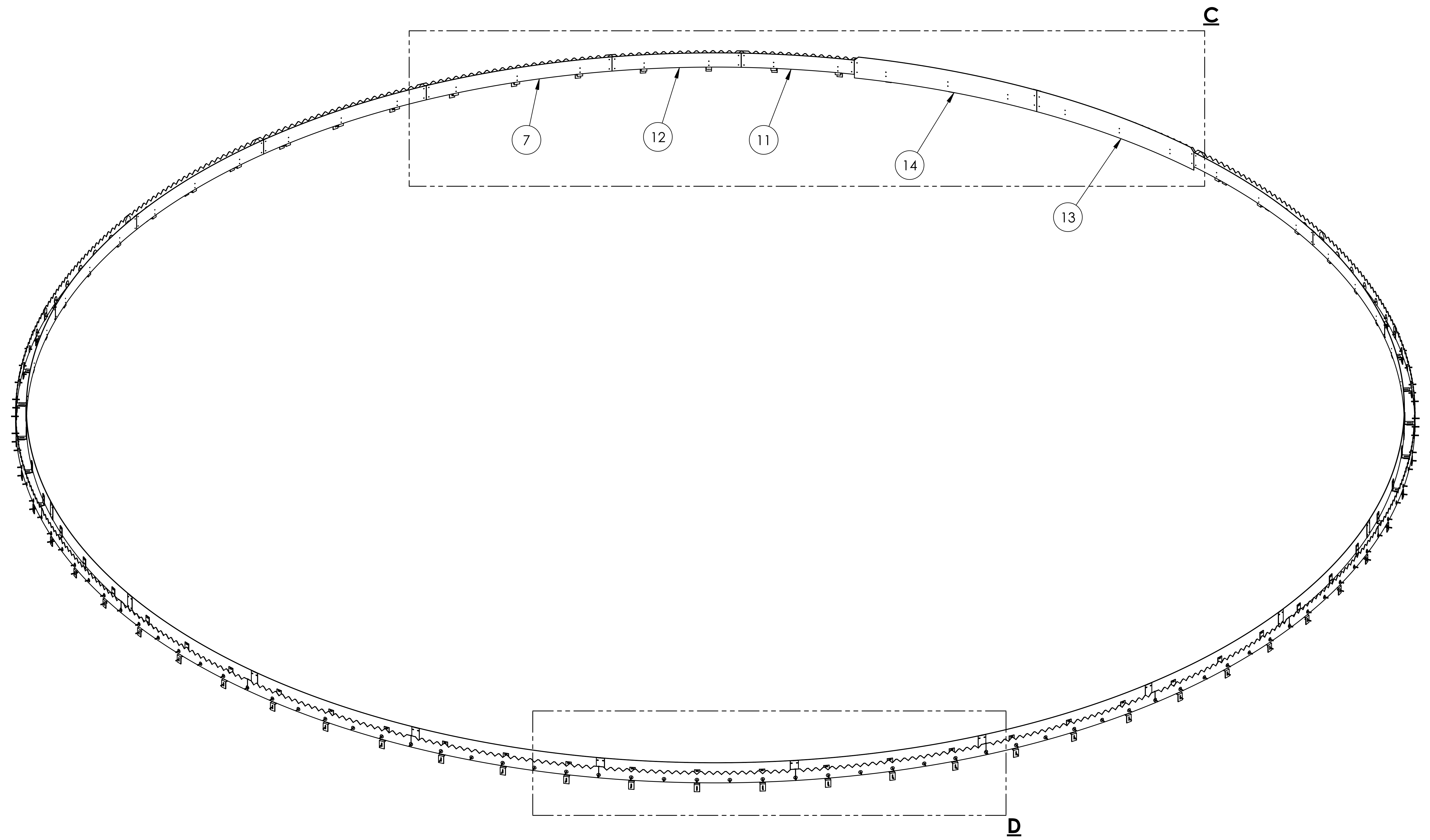

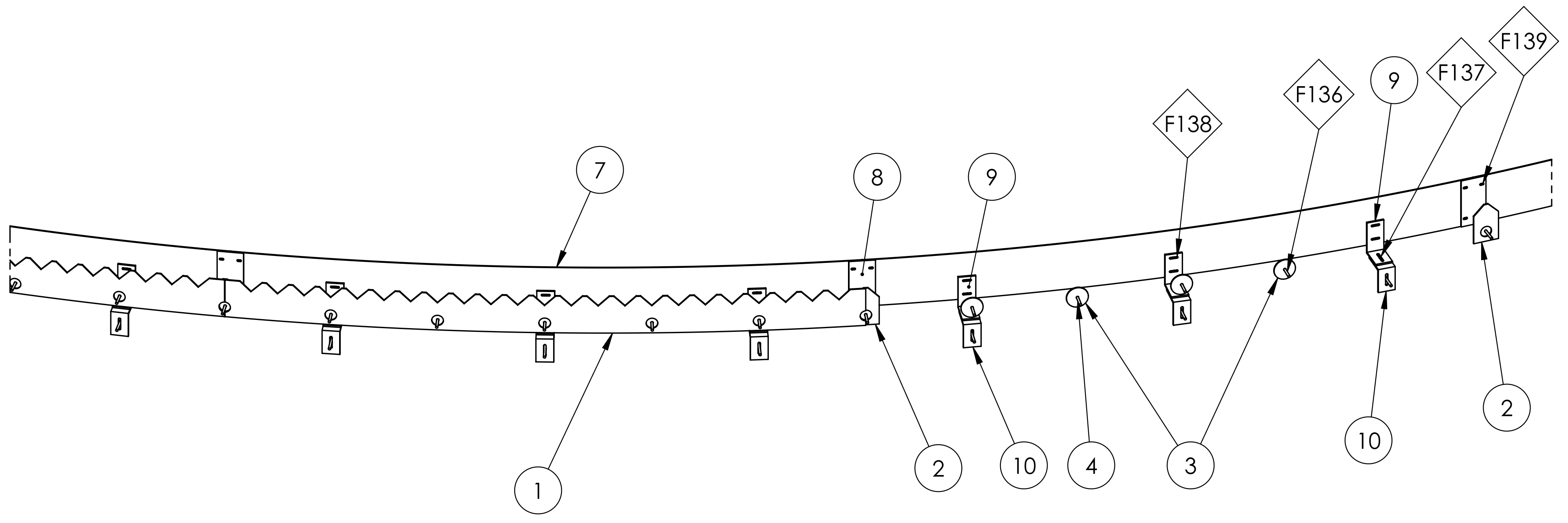

DETAIL D
SOME ITEMS HIDDEN FOR CLERITY.

ITEM NO.	QTY.	MATERIAL	DESCRIPTION
1	21	304 STAINLESS STEEL	WEIR PANEL
2	23	304 STAINLESS STEEL	WEIR SPLICE PLATE
3	135	304 STAINLESS STEEL	WEIR WASHER
4	202	316 SS	1/2-13 UNC BOLT
5	1	304 STAINLESS STEEL	WEIR SHORT PANEL
6	1	304 STAINLESS STEEL	WEIR SHORT PANEL 2
7	19	304 STAINLESS STEEL	BAFFLE PANEL
8	22	304 STAINLESS STEEL	BAFFLE SPLICE PLATE
9	67	304 STAINLESS STEEL	UPPER BAFFLE ANGLE BRACKET
10	67	304 STAINLESS STEEL	BAFFLE LOWER ANGLE BRACKET
11	1	304 STAINLESS STEEL	BAFFLE SHORT PANEL
12	1	304 STAINLESS STEEL	BAFFLE SHORT PANEL 2
13	1	304 STAINLESS STEEL	SCUM BOX BAFFLE 1
14	1	304 STAINLESS STEEL	SCUM BOX BAFFLE 2
15	1	304 STAINLESS STEEL	SCUM BOX BAFFLE SPLICE PLATE

ClearStream ENVIRONMENTAL
9090 SOUTH 300 WEST
SANDY, UT 84070
OFFICE: (801) 676-1890
FAX: (801) 676-1893

PROPRIETARY AND CONFIDENTIAL
THE INFORMATION CONTAINED IN THIS DRAWING IS THE SOLE PROPERTY OF CLEARSTREAM ENVIRONMENTAL. ANY REPRODUCTION IN PART OR AS A WHOLE WITHOUT THE WRITTEN PERMISSION OF CLEARSTREAM ENVIRONMENTAL IS PROHIBITED.

UNLESS OTHERWISE SPECIFIED:
DIMENSIONS ARE IN INCHES
WEIGHTS ARE IN LBS
TOLERANCES (I.A.W. AWS D1.1, AISC CODE OF STD PRACTICE):
FRACTIONAL: ±1/8"
HOLE LOCATION: ±1/32"

MATERIAL: N/A
WEIGHT EACH:
NUMBER OF MECHANISMS:
TOTAL WEIGHT:

	NAME	DATE
DRAWN	JSM	10/22
CHECKED	BKH	10/22
ENG APPR.	TSH	10/22
FAB INSP.		

DO NOT SCALE DRAWING
MODEL NUMBER: CCSO.085
DESIGNATION: FI17.S4.MSWT

COTTAGE GROVE
TITLE:
ERECTION DRAWING
ISOMETRIC VIEW
SIZE D
DWG. / PART NO. 110
REV A
SCALE: 1:35
SHEET 3 OF 3

D 22-008 REV A

PARTS LIST

GENERAL ARRANGEMENT DRAWINGS

DWG NO.	REV	DRAWING DESCRIPTION
100	A	GENERAL ARRANGEMENT
101	A	GENERAL ARRANGEMENT CONTINUED
102	C	CENTER COLUMN MOUNTING DETAILS
103	B	WALKWAY MOUNTING DETAILS
104	A	SCUM BOX MOUNTING DETAILS
105	0	SKIMMER ASSEMBLY
106	A	GENERAL NOTES
110	A	ERECTION DRAWING ISOMETRIC VIEW
111	0	ERECTION DRAWING ELEVATION VIEW
112	0	ERECTION DRAWING PLAN VIEW

COATING LEGEND
PNT = SUBMERGED
PNTN = NON-SUBMERGED
HDG = HOT DIPPED GALV.

FABRICATED PARTS

CARBON STEEL

PART NO.	REV	PART NAME	MATL	WEIGHT EACH	QTY/ ASSY	WEIGHT/ ASSY	QTY/ ORDER	TOTAL WEIGHT
FS.160	0	ACCESS WALKWAY	CS-PNTN	3052.2	1	3052.2	1	3052.2
					CARBON STEEL TOTAL WEIGHT	**3,052.2**		**3,052.2**

STAINLESS STEEL

PART NO.	REV	PART NAME	MATL	WEIGHT EACH	QTY/ ASSY	WEIGHT/ ASSY	QTY/ ORDER	TOTAL WEIGHT
FS.121	A	CENTER COLUMN	304SS	1927.4	1	1927.4	1	1927.4
FS.125	A	DRIVE CAGE	304SS	921.9	1	921.9	1	921.9
FS.126	0	DRIVE CAGE MOUNT	304SS	25.3	4	101.2	4	101.2
FS.130	B	RAKE ARM	304SS	1542.4	2	3084.8	2	3084.8
FS.132-1	A	SPIRAL BLADE 1	304SS	236.1	2	472.2	2	472.2
FS.132-2	B	SPIRAL BLADE 2	304SS	201.2	2	402.4	2	402.4
FS.132-3	A	SPIRAL BLADE 3	304SS	153.4	2	306.8	2	306.8
FS.132-4	A	SPIRAL BLADE 4	304SS	117.8	2	235.6	2	235.6
FS.133-1	A	SPIRAL BLADE SUPPORT 1	304SS	36.9	2	73.8	2	73.8
FS.133-2	A	SPIRAL BLADE SUPPORT 2	304SS	33.1	2	66.2	2	66.2
FS.133-3	A	SPIRAL BLADE SUPPORT 3	304SS	22.3	2	44.6	2	44.6
FS.133-4	A	SPIRAL BLADE SUPPORT 4	304SS	10.8	2	21.6	2	21.6
FS.133-5	A	SPIRAL BLADE SUPPORT 5	304SS	9.9	2	19.8	2	19.8
FS.133-6	0	SPIRAL BLADE SUPPORT 6	304SS	16.7	2	33.4	2	33.4
FS.133-7	0	SPIRAL BLADE SUPPORT 7	304SS	42.7	2	85.4	2	85.4
FS.134-1	A	SPIRAL BLADE SUPPORT BRACE 1	304SS	29.7	2	59.4	2	59.4
FS.134-2	A	SPIRAL BLADE SUPPORT BRACE 2	304SS	27.3	2	54.6	2	54.6
FS.134-3	A	SPIRAL BLADE SUPPORT BRACE 3	304SS	19.6	2	39.2	2	39.2
FS.134-6	A	SPIRAL BLADE SUPPORT BRACE 6	304SS	17.2	2	34.4	2	34.4
FS.134-7	A	SPIRAL BLADE SUPPORT BRACE 7	304SS	40.3	2	80.6	2	80.6
FS.135	0	RAKE ARM COUNTER WEIGHT	304SS	40.0	18	720.0	18	720.0
FS.145	A	MANIFOLD	304SS	837.6	2	1675.2	2	1675.2
FS.146	0	MANIFOLD SPACER	304SS	5.6	8	44.8	8	44.8
FS.147	A	MANIFOLD SQUEEGEE	304SS	2.9	6	17.4	6	17.4
FS.150	B	FEEDWELL PANEL	304SS	702.7	4	2810.8	4	2810.8
FS.151	A	FEEDWELL SUPPORT	304SS	328.6	4	1314.4	4	1314.4
FS.152	0	FEEDWELL JOINT PLATE	304SS	5.3	4	21.2	4	21.2
FS.153	A	LAEDI BOTTOM	304SS	410.4	4	1641.6	4	1641.6
FS.154	A	FEEDWELL MOUNTING PLATE	304SS	7.3	8	58.4	8	58.4
FS.155-1	0	IDW SEALPLATE 1	304SS	10.8	2	21.6	2	21.6
FS.155-2	0	IDW SEALPLATE 2	304SS	11.2	2	22.4	2	22.4
FS.156	A	LAEDI OUTLET	304SS	238.3	8	1906.4	8	1906.4
FS.157	0	LAEDI BAFFLE PLATE	304SS	9.9	4	39.6	4	39.6
FS.158	0	FEEDWELL BAFFLE	304SS	19.5	4	78.0	4	78.0
FS.161	0	BEAM CLAMP	304SS	2.4	4	9.6	4	9.6
FS.165	0	BEARING PLATE	304SS	3.2	2	6.4	2	6.4
FS.170	0	SKIMMER ARM	304SS	180.4	1	180.4	1	180.4
FS.171-1	0	SCUM DEFLECTOR 1	304SS	76.3	1	76.3	1	76.3
FS.171-2	A	SCUM DEFLECTOR 2	304SS	126.9	1	126.9	1	126.9

FS.171-3	0	SCUM DEFLECTOR 3	304SS	127.4	1	127.4	1	127.4
FS.172-1	0	SKIMMER SUPPORT 1	304SS	149.9	1	149.9	1	149.9
FS.172-2	0	SKIMMER SUPPORT 2	304SS	133.2	1	133.2	1	133.2
FS.172-3	0	SKIMMER SUPPORT 3	304SS	107.3	1	107.3	1	107.3
FS.172-4	0	SKIMMER SUPPORT 4	304SS	106.5	1	106.5	1	106.5
FS.173	0	FEEDWELL SKIMMER SUPPORT	304SS	12.8	1	12.8	1	12.8
FS.174	A	ANTI-ROTATION BAFFLE SUPPORT	304SS	90.5	2	181.0	2	181.0
FS.175	0	ANTI-ROTATION BAFFLE BACKER BAR	304SS	22.8	2	45.6	2	45.6
FS.180	0	SCUM BOX	304SS	387.9	1	387.9	1	387.9
FS.181	0	SCUM BOX SUPPORT	304SS	53.5	2	107.0	2	107.0
FS.182	0	FEEDWELL SUPPORT BRACE	304SS	68.3	4	273.2	4	273.2
WB.190	A	WEIRS & BAFFLES (ONE LOT)	304SS	5904.0	1	5904.0	1	5904.0
STAINLESS STEEL TOTAL WEIGHT						**26,372.5**		**26,372.5**

OTHER FABRICATION

PART NO.	REV	PART NAME	MATL	WEIGHT EACH	QTY/ ASSY	WEIGHT/ ASSY	QTY/ ORDER	TOTAL WEIGHT
Fabsteel		STAINLESS STEEL PRICE INCREASE		0.0	1	0.0	1	0.0
FS.120		ADDITIONAL WEIGHT - FS.182		0.0	1	0.0	1	0.0
PO.145		304SS MANIFOLD SEAL BANDING (50ft - McMaster 5426K2)		0.0	1	0.0	1	0.0

PURCHASED PARTS

PART NO.	REV	PART NAME	MATL	QTY/ ASSY	QTY/ ORDER
FA.100	A	FASTENERS (ONE LOT)	316SS	1	1
FV	0	FLUSH VALVE ASSEMBLY	N/A	1	1
GT.162	A	WALKWAY GRATING	ALUM	1	1
GT.163	A	WALKWAY CHECKER PLATE	ALUM	1	1
HR.161	0	WALKWAY HANDRAIL	ALUM	1	1
NE.148	0	MANIFOLD SEAL	NEOP	1	1
NE.177	0	ANTI-ROTATION BAFFLE	NEOP	20	20
PL.164	0	SLIDE PLATE	UHMW	2	2
PO.165	0	CSE HANDRAIL LOGO PLATE W/ HANGERS	304SS	1	1
PO.166	0	CSE DRIVE NAME PLATE	304SS	1	1
PR.120	0	PRE DRIVE UNIT	N/A	1	1
SK.CUSTOM	0	SKIMMER ASSEMBLY (SK.448304SS)	304SS	1	1
SPARE.101	0	SET OF BEARING AND SEALS FOR DRIVE UNIT	N/A	1	1
SPARE.102	0	ONE YEAR SUPPLY OF LUBRICANT DRIVE UNIT	N/A	1	1
SPARE.103	0	SPRINGS, BOTTOM & SIDE WIPER AND UHMW FOR SKIMMER	N/A	1	1
SQ.131	0	SPIRAL BLADE SQUEEGEE 1	304SS	1	1
SQ.132	0	SPIRAL BLADE SQUEEGEE 2	304SS	1	1
SQ.133	0	SPIRAL BLADE SQUEEGEE 3	304SS	1	1
SQ.134	0	SPIRAL BLADE SQUEEGEE 4	304SS	1	1

APPENDIX C

Past Geotechnical Reports

- Cottage Grove WWTP Improvements, Geotechnical Investigation, Foundation Engineering, Inc., February 2004
- Cottage Grove WWTP, Storage Pond, Revised Final Geotechnical Data Report, Shannon & Wilson, Inc., November 2019

Cottage Grove WWTP Improvements, Geotechnical Investigation,
Foundation Engineering, Inc.,
February 2004

Geotechnical Investigation

Cottage Grove WWTP Improvements

Cottage Grove, Oregon

Prepared for:

Carollo Engineers
Portland, Oregon

February 2, 2004

Professional Geotechnical Services

Foundation Engineering, Inc.

Foundation Engineering, Inc.
Professional Geotechnical Services

Richard Shanley, P.E.
Carollo Engineers
5100 SW Macadam Avenue
Suite 440
Portland, Oregon 97201

February 2, 2004

Cottage Grove WWTP Improvements
Geotechnical Investigation
Cottage Grove, Oregon

Project 2021102

Dear Mr. Shanley:

We have completed the requested geotechnical investigation for the above-referenced project. Our report includes a description of our work, a discussion of site conditions, a summary of laboratory testing, and a discussion of engineering analyses. Recommendations for site preparation; foundation, retaining wall and pavement design; and construction are enclosed.

We have concluded that conventional spread footings and continuous wall footings are suitable for the proposed expansion. Wet and dry weather earthwork recommendations are included.

It has been a pleasure assisting you with this phase of your project. Please do not hesitate to contact us if you have any questions regarding this report or other geotechnical concerns at the site.

Sincerely,

FOUNDATION ENGINEERING, INC.

Mel McCracken, P.E.
Project Engineer

MJM/cs
Enclosure

REGISTERED PROFESSIONAL ENGINEER
50451PE
OREGON
JUL. 14, 1998
MELVIN J. McCRACKEN
EXPIRES: 12/31/04

Portland • Corvallis
820 NW Cornell Avenue • Corvallis, Oregon 97330-4517 • Bus. (541) 757-7645 • Fax (541) 757-7650

GEOTECHNICAL INVESTIGATION
COTTAGE GROVE WWTP IMPROVEMENTS
COTTAGE GROVE, OREGON

BACKGROUND

The City of Cottage Grove is planning several improvements to its wastewater treatment plant (WWTP) at 1800 N Douglas Avenue (Figure 1A, Appendix A). The improvements include: an influent pumping/preliminary treatment structure, a secondary clarifier, an oxidation ditch, a tertiary filtration system, a thickening and dewatering facility, a lab/administration building expansion, and surrounding pavements. We understand that the buildings will be constructed using slab-on-grade floors and that the below-grade structures may extend as much as ±20 feet below the existing ground surface.

Carollo Engineering (Carollo) is providing civil engineering services for the project. Foundation Engineering, Inc. (FEI) was retained by Carollo to complete a foundation investigation for the site. Our work scope is outlined in a proposal dated August 29, 2002, and the work was authorized by a professional service agreement.

FIELD EXPLORATION

We drilled six exploratory boreholes at the site on October 14 and 15, 2002, using a truck-mounted CME 75 drill rig and hollow stem auger drilling techniques. The boreholes extended to a maximum depth of ±30.4 feet. Disturbed soil samples were obtained in conjunction with Standard Penetration Testing (SPT) at 2.5-foot intervals in the zone above and below the planned footings and at 5-foot intervals above and below that zone. Relatively undisturbed samples were obtained with thin-walled Shelby tubes. Ground water levels observed during drilling were noted.

In addition to the borings, we excavated six test pits within the proposed foundation and pavement areas using a rubber-tired backhoe. The test pits extended to a maximum depth of ±13½ feet. Bulk soil samples were collected for soil classification and testing. Bucket soil samples were collected at selected locations to establish subgrade parameters and to test for corrosiveness. The presence or absence of ground water infiltration was noted.

The boreholes and test pits were continually logged during the field work by a geologist from our office. Summary logs (Appendix B) were prepared based on a review of the field logs, comparison with materials observed in nearby test pits and borings, drilling and digging action, and an examination of the soil samples in our laboratory. The borehole and test pit locations are shown on Figure 2A (Appendix A) and the subsurface conditions are discussed below.

A previous geotechnical investigation for adjacent components of the existing WWTP included 17 borings and 7 interpreted subsurface cross-sections. These soil profiles were reviewed and used to supplement the current subsurface information.

DISCUSSION OF SITE CONDITIONS

Topography and Vegetation

The site is located on relatively level terrain near the east bank of the Coast Fork of the Willamette River and south of the confluence with the Row River. There are two fill stockpiles (berm) along the southern portion of the project area; the westernmost berm is the larger of the two, and fill was still being placed during our investigation. The eastern berm is smaller, older, and covered with vegetation. It appears that both berms contain similar fill. A few trees are scattered throughout the site and rows of planted trees are located immediately to the north of the west berm. Grass and weeds cover the existing, open ground surface.

Local Geology

Cottage Grove is located within the extreme southern extent of the Willamette Valley, between the Coast Range and Cascade Range. The site is located adjacent to the east bank of the South Fork of the Willamette River. The area is underlain by river alluvium consisting of gravel, sand and silt (Walker and MacLeod, 1991); (Wells and Peck, 1979). The hills surrounding Cottage Grove are composed of late Eocene to early Oligocene (±35 million years old) andesitic lapilli tuff and breccia of the continental Fisher Formation (Walker and MacLeod, 1991)

The soil profile encountered during our investigation includes fill, alluvial deposits and decomposed tuffaceous sandstone/siltstone of the Fisher Formation. The decomposed Fisher Formation extends to the limits of our exploration.

Two possibly active fault zones have been identified within a ±50 mile radius of the project site. The Drain-Sutherlin Area faults are two inferred faults trending to the northeast and have estimated lengths of ±12.4 and 8.7 miles. This fault zone is located ±16 miles southwest of Cottage Grove. The features are relatively young (<28,500 years) and exhibit little evidence of surface displacement (Geomatrix Consultants, 1995).

The southern extent of the 34-mile long, northeast-trending Corvallis Fault is located ±50 miles northwest of the WWTP (Yeats et al., 1996). Faulting has been ongoing since the Eocene, with the most recent detectable movement occurring before ±28,500 years ago (Geomatrix Consultants, 1995).

Geologic maps indicate that no faults underlie the site (Walker and MacLeod, 1991); (Wells and Peck, 1979). Three faults have been mapped within ±10 miles northwest of the site. However, these fault zones have not been identified as potentially active (Geomatrix Consultants, 1995).

Subsurface Conditions

A description of the generalized soil profile from the boring and test pit information is provided below. A more detailed description of subsurface conditions at individual exploration locations is found in the appended logs (Appendix B).

The site is underlain by variable amounts and types of fill. The fill consists predominately of gravel with sand, silt, and clay and some concrete and other debris. The fill is underlain by silt, which grades into sandy gravel (alluvium) followed by clayey silt (decomposed Fisher Formation) extending to the limits of our exploration.

The depth and composition of the fill varies across the site, but typically consists of ±1½ to 5 feet of medium dense to dense, sandy gravel with silt. Most of the fill appears to have been native materials that were excavated for the construction of the existing WWTP facilities and placed around the surrounding grounds. However, the fill berms to the south are composed primarily of construction debris that is being stockpiled by the City. The western stockpile was evaluated by extending a portion of TP-2 into the stockpile slope.

In the test pits, medium stiff to very stiff, medium plastic silt extends below the fill to a depth ranging from ±6 to 11 feet. Borings BH-2, BH-5 and BH-6 encountered soft to medium stiff silt, which extends to ±9½ to 12½ feet with some organics observed within the silt in BH-2. Alluvium consisting of medium dense to very dense, sandy gravel with silt and varying amounts of cobbles extends below the fill and silt to depths ranging from ±11½ to 16 feet in the borings. The test pits encountered the sandy gravel in the majority of the borings at depths ranging from ±6 to 13 feet. TP-6 encountered medium stiff, clayey silt below the fill and a thin (2-foot thick) clay layer was noted at the contact between the silty clay and sandy gravel. At most locations, the sandy gravel extends to the limits of the exploration.

Decomposed Fisher Formation was encountered below the coarse alluvium at BH-1, BH-2, BH-3, BH-4 and TP-1. The decomposed Fisher Formation consists of very stiff to hard, medium plasticity, clayey silt, which underlies the coarse-grained alluvium and extends to the maximum limits of our exploration (±30.4 feet in BH-1).

Ground Water

We encountered ground water or water infiltration/seepage during our subsurface investigation. Ground water during drilling was noted at depths ranging from ±7½ to ±12 feet in the borings. No ground water was noted in BH-6, however, the soils became moist with depth. Slow seepage was noted at ±12 feet in TP-1, moderate to fast seepage was noted in TP-4 at ±9½ feet, and very slow seepage was noted at ±11 feet in TP-6. The remaining test pits or borings did not encounter any seepage or infiltration at the time of our investigation

We understand that the 100-year flood elevation at the site is at ±El. 627. We expect that ground water levels will fluctuate seasonally. In addition, perched ground water conditions may develop during the wettest times of the year.

LABORATORY AND FIELD TESTING

The laboratory work included index and corrosion testing. Results of all testing are summarized in Tables 1 through 3. The corrosion testing also included resistivity testing performed in the field. A discussion of each type of testing including a brief summary of the results follows.

Index Testing

Index testing included natural water content, Atterberg limits tests, free swell and organic content. Natural water content tests are summarized on the appended boring logs and in Table 1. Atterberg limits test results (Table 1) indicate the near surface silt has a Plasticity Index (PI) of 18 and a USCS classification of MH (i.e., it is a medium plastic silt). The deeper, clayey silt (decomposed Fisher Formation) is considered medium plastic (MH) with a PI of 21. Organic content and free swell tests were also run on the underlying soils and are summarized in Table 1.

Table 1. Summary of Index Laboratory Test Results

Sample Number	Sample Depth (feet)	Natural Water Content (percent)	LL	PL	PI	USCS Classification	Free Swell (percent)	Organic Content (percent)
SS-1-3	15 - 16½	26.5						
SH-2-2	10 - 12	96.1						20.0
SS-2-6	20 - 21½	24.0	52	31	21	MH		
SS-3-4	12½ - 14	23.4						
SS-4-5	17½ - 19	20.9					51	
SS-5-2	5 - 6½	35.4						
SS-6-3	7½ - 9	35.6						
S-1-2	2 - 3	20.4						
S-1-3	12 - 12½	39.1						
S-3-1	3 - 4	28.8						
S-4-1	1½ - 2½	19.2	52	34	18	MH		
S-5-1	3 - 4	27.3						
S-6-2	5 - 5½	31.9						
S-6-3	11 - 11½	54.4						

Corrosion Testing

Corrosion testing includes sulfide and chloride content, resistivity and pH. A summary of the test results follows.

A series of corrosion tests for sulfide and chloride were conducted by MEI-Charlton, Inc. on sample SS-3-1 at 15 to 16½ feet (decomposed Fisher Formation) and S-1-2 at 3 to 4 feet (silt alluvium). Sulfide content for both samples were found to be <2 ppm. However, the chloride content for SS-1-3 is 7 ppm and S-1-2 is 26 ppm. A more detailed summary of the results is included in Appendix C.

Laboratory pH tests (ASTM G51) and in-situ resistivity tests (ASTM G57) were conducted to help evaluate the potential corrosiveness of the foundation soils. In-situ resistivity testing (ASTM G57) was conducted at the ground surface near the proposed locations of the oxidization ditch, secondary clarifier and the thickening/dewatering facility (Figure 2A, Appendix A). The resistivity testing was performed on October 14 and 15, 2002, using a Nilsson 400, 4-pin, soil resistance meter. The 4-pin resistance meter provides an estimate of the average resistivity of a soil profile extending to a depth equal to the spacing between the pins. Pin spacings of 5, 10, and 20 feet were used. The results of the resistivity tests are summarized in Table 2.

Table 2. Results of Field Resistivity Tests

Test Location	Pin Spacing (feet)	Resistivity (Ω-cm)
R-1 Clarifier	5	5,218
	10	3,256
	20	3,830
R-2 Thickening/dewatering facility	5	2,681
	10	4,692
	20	8,809
R-3 Oxidation ditch	5	5,075
	10	5,937
	20	6,320

Laboratory pH tests (ASTM G51) were performed on representative soil samples taken from the nearby boring or test pit locations. The results are summarized in Table 3.

Table 3. Results of pH Testing

Sample	Depth (feet)	Soil Description	pH
SS-1-3	15 - 6½	Light brown, iron-stained SILT (decomposed Fisher Formation)	5.5
S-5-1	3 - 4	Brown SILT (alluvium)	5.9
S-1-2	2 - 3	Brown SILT (alluvium)	6.3

SEISMIC ANALYSIS AND EVALUATION

Bedrock Acceleration and Site Response

The seismic design of the structures will be in accordance with the state of Oregon Structural Specialty Code (OSSC), which is based on the 1997 UBC. We believe a S_c Soil Profile Type is appropriate since the site is primarily underlain by dense soils. A Seismic Source Type C was used to develop the response spectrum. Near source factors (N_a and N_v) of 1.0 were developed based on the Seismic Source Type C. Seismic Coefficients C_a and C_v of 0.33 and 0.45 are appropriate for the S_c profile. The site response spectrum is shown in Figure 3A (Appendix A).

Liquefaction Assessment

The potential for liquefaction at the site is extremely low due to the presence of cohesive soils and dense gravel. Silt, gravel and clayey silt were observed to depths as great as ±30 feet (El. 600). Ground water elevations extending to El. 627 are expected during the wet months of the year. However, due to the cohesive and dense soils generally observed throughout the site, we do not anticipate liquefaction will occur in these layers.

DISCUSSION

Site Conditions

We understand that finish floors for the at-grade structures will be built at ±El. 627 and 628 and the below-grade structures will extend to ±El. 612 and 617. A variety of foundation alternatives were evaluated for the proposed structures. We have recommended using shallow foundations due to the relatively light structure loads, limited depth of fill, and stiffness of the underlying soils. Continuous spread footings will be constructed to support the various on-site structures.

Fills. The site is underlain by fill and has been used for stockpiling construction debris and native materials that were excavated for the existing facilities. The fill typically consists of medium stiff silt mixed with some granular soils and extends to depths of ±3 to 5 feet. Construction debris and zones of predominately fine-grained soils were observed within the fill at isolated locations.

Planned foundation elevations lie within or below the existing fill. Based on the variability of the fill, zones of organic material, and lack of documentation of fill placement, it is our opinion that the fill is unsuitable in its current condition to support the proposed structures. Therefore, we have assumed that the fill will be removed beneath slab foundations. We have provided recommendations for foundation construction and design using this approach.

Alluvium. Beneath much of the at-grade building footprints, the fill is underlain by a relatively thin layer of medium stiff to stiff silt. In isolated areas, the silt contains some organics. The zone of organics that were observed in BH-2 is unsuitable for foundation support. However, the proposed clarifier will have foundations extending below the zone of organic material. Therefore, we do not anticipate this material will present a problem for foundation construction.

The medium stiff silt was generally encountered at depths of ±2 to 4 feet and was observed to be up to 7½ feet thick. The silt was followed by dense to very dense, alluvial gravel that was encountered at depths of ±4½ to 12 feet and was observed to be up to ±9½ feet thick. We expect the dense gravels will have a relatively high permeability. Therefore, extensive dewatering may be required for the below-grade structures during construction. The dense gravel extended to the limits of the explorations or was followed by hard, clayey silt (decomposed Fisher Formation).

Medium to high plasticity clay was observed in TP-6, but at an elevation above the planned foundation level. Therefore, the clay will be removed during construction.

We anticipate that the alluvial deposits under the proposed above-grade structures will have sufficient strength to support the foundations, provided the recommendations provided herein are followed.

Fisher Formation. The decomposed Fisher Formation (clayey silt) found at ±El. 612 to 617 in BH-1 through BH-4 was hard and medium plastic. The clayey silt is moisture sensitive, but if disturbance is minimized during construction, a ±6-inch lift of structural fill should provide an adequate leveling course.

Earthwork

We anticipate that the large excavations for the WWTP project will generate a net export of fill material. In addition, the stockpiled fill contains variable material including fine-grained soils, construction debris and some organics. Segregating useful soil for reuse is unlikely to be cost-effective in light of the cleaner, granular materials generated from the deeper portions of the excavations. Therefore, the most practical method to mitigate the existing fill is to remove and haul off the fill stockpiled on-site. We recommend that an FEI representative be on-site to evaluate the suitability of excavated native materials for reuse and documentation of the fill procedure.

Construction Access. Construction access will be the contractor's responsibility. We assume that the paving areas will be graded during dry weather, but the contractor may elect to construct the pavement areas and/or building pad during wet weather conditions. We have provided wet weather construction recommendations, if required.

Excavation. The structures will require construction adjacent to several existing facilities without damage or interruption of service. We have assumed that the contractor would attempt to use an open excavation for the below-grade structures. In anticipation of using open excavations, we anticipate that the dense, alluvial soils will be able to support an average excavation slope of 1.5(H):1(V). However, we recommend using a flatter slope such as 2(H):1(V) in the medium stiff, silty soil overlying the gravels. This recommendation assumes that ground water seepage will not be present due to dewatering efforts.

We understand that the existing facilities near the proposed below-grade structures also have relatively deep foundations. Therefore, the existing buildings will not create a surcharge at the top of the open excavations and damage to existing buildings caused by undermining existing foundations should not be a problem for the construction of the below-grade structures.

The planned lab/administration building will be constructed near an existing structure that has shallow foundations at approximately the existing ground level. Therefore, we recommend that building pad excavations in areas adjacent to the existing structure be limited to ±18 inches below finished grade.

Dewatering. We anticipate the ground water elevation at the site will correspond to the water elevation in the adjacent river. Therefore, dewatering will likely be required for most below-grade excavations.

We also anticipate the bulk of the infiltration will occur through the coarse-grained alluvium above ±El. 612 to 617. Consequently, the contractor's shoring and dewatering plan may require a cut-off to reduce infiltration from this stratum.

Foundation Preparation. It is anticipated that minimum excavation depths of ±3 feet will be required beneath buildings, but isolated areas, including below-grade structures, will be deeper. In pavement areas, the excavation depth could be reduced to ±1 foot when combined with removal of exposed organics, high plasticity clay or debris. Surface preparation would also include scarification and recompaction of the subgrade.

ENGINEERING ANALYSIS

Our analyses indicate the native materials at the foundation elevations of the proposed structures will provide sufficient bearing capacity. Design parameters for bearing capacity, settlement, lateral earth pressures and pavement design are discussed in the following sections.

Bearing Capacity (at-grade structures)

Torvane measurements obtained in the medium stiff to stiff silt underlying the fill indicate undrained shear strengths ranging from ±0.2 to 0.4 tsf. However, we observed that the silt had low plasticity. In addition to the undrained shear strengths, we also used SPT test results to estimate strength properties of the silt. Our analysis assumes that existing fill beneath the foundations will be removed as recommended. We have also assumed that all footings will bear on a nominal 6 inches of imported structural fill (¾-inch minus, angular, crushed rock).

Continuous perimeter footings will be used to support the lab/administration building and the thickening/dewatering facility. We estimated the bearing capacity of conventional footings placed 1.5 feet below the ground surface, bearing on imported, granular fill and underlain by native silt. Our calculations suggest that an allowable bearing pressure of 2,000 psf (with a factor of safety of 3) would be appropriate for the design of continuous wall footings.

Bearing Capacity (below-grade structures)

We used empirical correlations with SPT testing to estimate strength properties of the granular alluvium and calculate allowable bearing capacities for this material. Our analysis assumes that all footings will bear on a nominal 6 inches of imported structural fill (¾-inch minus, angular, crushed rock) overlying dense, granular (gravel or sand) alluvium.

Continuous perimeter footings will be used to support the proposed oxidation ditch, pretreatment facility and clarifier. We estimated the bearing capacity of conventional footings placed ±11 to 27 feet below the ground surface, bearing on imported granular fill and underlain by native, sandy gravel and clayey silt. Our calculations suggest that an allowable bearing pressure of 4,000 psf (with a factor of safety of 3) would be appropriate for the design of continuous wall footings. This analysis assumes that the continuous footings will bear on a nominal 6 inches of compacted, imported, structural fill.

Settlement

A formal settlement analysis was not performed for the new oxidation ditch and clarifier or the associated below-grade buildings. We believe post-construction settlement of the below-grade structures should be less than ½ inch because there will be minimal change in effective stress for the foundation soils. In addition, the granular soils encountered near the anticipated base elevations are dense to very dense. Therefore, we believe the risk of significant, post-construction consolidation of the granular material is low.

Medium stiff silt underlies portions of the at-grade structures and it is likely the placement of additional fill will cause some consolidation of this stratum. However, the layer of silt is relatively thin and is underlain by very dense, alluvial, granular materials. Therefore, we recommend designing the at-grade structures to accommodate total settlements of ¾ inch and differential settlement of up to ½ inch.

Retaining Walls

We conducted analyses of lateral earth pressures and buoyant forces for walls constructed below-grade at the site. Our analysis assumed a design ground water elevation near the top of the wall for design flood conditions.

Lateral Soil Pressure. Analyses were performed to estimate the lateral earth pressure for the below-grade structures. The following assumptions were made for the finished structures:

- A level backfill will extend beyond the wall with a surcharge load of 400 psf for equipment accessing the site. A lateral earth pressure distributed uniformly over the height of the wall should be assumed due to surcharge loading.
- The ground water table (GWT) for design flood conditions will lie at El. 627.0.
- At-rest, active, passive and seismic (K_o, K_a, K_p and K_{ae}) earth pressure conditions.

Lateral soil pressure may be estimated using an equivalent fluid density. We calculated an active earth pressure coefficient of 0.33 for unrestrained walls and an at-rest coefficient of 0.5 for restrained walls. Using a moist unit weight of 120 pcf and a buoyant unit weight of 58 pcf for backfill materials, we recommend an equivalent fluid density of 20 pcf for unrestrained walls and 30 pcf for restrained walls. Including the hydrostatic pressure, the equivalent fluid densities for design are 83 pcf and 93 pcf for unrestrained and restrained walls, respectively. Passive soil pressure may be estimated using an equivalent fluid density of 200 pcf. In addition, we assumed a surcharge pressure of 400 psf, which should be distributed uniformly along the height of the wall. The surcharge pressure for at-rest and active conditions is 200 psf and 133 psf, respectively. Passive pressures have been estimated using an equivalent fluid density of 200 psf for yielding walls.

In addition, dynamic earth pressures were calculated using the Mononobe-Okabe method for yielding walls. We recommend using a reverse triangular pressure distribution and a design pressure of 10 pcf * H at the ground surface. The dynamic earth pressure should be additive to the active, hydrostatic and surcharge pressures.

Buoyancy Forces. During high flow periods of the Willamette River, the water level in the underlying soil is expected to rise significantly above that observed during our exploration. We understand that the flood elevation in the vicinity of the structure is ±El. 627. Due to the presence of granular soils at the site, we believe the ground water elevation will closely match the Willamette River water level during flood events. Therefore, we recommend that the structures be designed to resist the uplift force associated with the flood elevation (El. 627). Based on the flood elevation and bottom of the structures, we have estimated in Table 4 the equivalent buoyancy forces at the base of the structures.

Table 4. Buoyancy Forces for Below-grade Structures

Structure	Estimated Base Elevation (feet)	Buoyancy Force (psf)
Oxidation Ditch	616	690
Clarifier	610	1,060
Pretreatment Facility	612	940

Pavements

Traffic. The following traffic loading was estimated based on information from Carollo Engineers and the function of the existing and proposed facility. We estimated the following loadings and their frequency:

- 5 to 10 cars and pickups per day
- 4 - single-unit delivery truck trips per month (±2 ton load)
- 4 - 46,000 lb. dump trucks per day
- 1 - 60,000 lb. truck per month

Pavement Design. Estimated equivalent axle loads were calculated assuming a typical 20-year design life for the pavement. Flexible (asphalt) pavements were considered in our analysis. The assumed traffic was used to estimate an equivalent single-axle load (E18's) of 39,000 for the flexible pavement. A M_r value of 4,500 psi was selected for analysis based on available correlations and our previous experience with similar subgrade soils.

We used a computer program and the assumed traffic to estimate a pavement section for the new roadways. Subgrade parameters used in our analysis are predicted on a silt subgrade compacted to 95% relative compaction (according to ASTM D 698). Additional base rock may be required if adequate subgrade compaction is not practical.

Our analysis indicates a flexible section consisting of 3 inches of asphalt concrete over 8 inches of crushed base rock is acceptable. This section is relatively light and is predicated on the removal of unsuitable subgrade materials as provided in our recommendations. The section provided above is not intended to support construction traffic. Therefore, the contractor should be responsible for repairs or provide alternative access if pavements are constructed early.

For a 20-year design life, an overlay should be planned at about 12 years. Environmental degradation of the wearing surface is likely to impact the serviceability of the pavement prior to the end of the design life. Research has shown that overlaying pavements at that time is more cost-effective than a full-depth repair after the pavement has failed. An experienced engineer should inspect the pavement every 5 to 6 years to determine its condition and need for rehabilitation.

RECOMMENDATIONS

We suggest that the earthwork be completed during dry weather. However, we understand that the below-grade work is scheduled to start during dry weather and the at-grade work may carry over into wet weather periods. Therefore, we have included wet and dry weather recommendations for the at-grade structures. Some site grading and other earthwork operations may not be practical during periods of rainfall due to the presence of silt and clay. We recommend an on-site conference with the contractor prior to initiating the grading work to review site conditions and to discuss the following recommendations.

General Earthwork

1. Structural fill, as defined in this report, should consist of 1 or ¾-inch minus, clean, well-graded, crushed gravel or rock. We should be provided a sample of the intended fill for approval, prior to delivery to the site.

2. Granular site fill should consist of on-site sand, sand-gravel mixtures or gravelly soil that is free of plastic clay, organic matter, or construction debris. However, during wet weather conditions, granular site fill should consist of crushed gravel or rock with a maximum size of ±1½ to 3 inches. Bar-run, on-site sand, sand-gravel mixtures or gravelly soil should not be used during wet weather. It may not be practical to place and compact the granular site fill during periods of heavy rainfall. We should be provided a sample of the intended fill for approval, prior to delivery to the site.

3. Stabilization rock should consist of competent, angular, open-graded, 6-inch to 3-inch crushed rock, free of plastic clay, organic matter or construction debris. We should be provided a sample of the intended fill for approval, prior to delivery to the site. Bar-run gravel is not acceptable for use as stabilization rock.

4. The stabilization geotextile shall be either a needle-punched non-woven geotextile or a geotextile woven with fibrillated or monofilament yarns.

   The stabilization geotextile shall have MARV properties meeting the requirements of an AASHTO M 288-96 Class 1 geotextile. We should be provided a specification sheet on the selected fabric for approval prior to delivery to the site.

5. Compact all exposed subgrade and granular fills. All fills should be placed in loose lifts not exceeding 12 inches. Thinner lifts may be required if light or hand-operated equipment is used. Compact all subgrade, granular site and structural fill to a minimum of 95% relative compaction.

   The maximum dry density of ASTM D 698 should be used as the standard for estimating relative compaction. The moisture content of the fill should be adjusted to within ±2% of its optimum value prior to compaction. Field density tests should be run frequently to confirm adequate compaction of all fills. Adequate compaction of the subgrade and rock that is too coarse for testing should be verified visually by one of our representatives.

6. Drain rock should consist of 2-inch minus, open-graded, crushed gravel or rock with less than 2% passing the #200 sieve.

7. The filter geotextile shall be woven with monofilament or fibrillated yarns or a needle-punched, non-woven geotextile.

   The filter geotextile shall have MARV strength properties meeting the requirements of an AASHTO M 288-96 or M288-2000 Class 2 geotextile.

The filter geotextile shall have MARV hydraulic properties meeting the requirements of AASHTO M 288 (geotextile for subsurface drainage) for adjacent materials with greater than 50% fines. The selected fabric shall have a permitivity greater than 0.1 sec^{-1} and an AOS less than 0.22 mm. We should be provided a specification sheet on the selected fabric for approval prior to delivery to the site.

8. Overexcavate all test pits that extend under structural areas. Replace the test pit backfill with compacted, granular site fill or structural fill.

Design and Construction of Permanent Below-Grade Foundations and Walls

9. Design all below-grade continuous wall footings (clarifier, pretreatment facility and oxidation ditch) using an allowable bearing pressure of 4,000 psf.

10. Construct the footings on a nominal ±6-inch thick leveling course of structural fill overlying undisturbed, native subgrade material.

11. Use a modulus of subgrade reaction, k_s, of 250 kcf for floor slab design. These values assume that the slab will be supported by at least 12 inches of structural fill underlain by hard, clayey silt. Reinforce all floor slabs to reduce cracking and warping.

12. Design the buildings using a Seismic Zone Factor (Z) of 0.30. We selected an S_c Soil Profile Type for the site with corresponding Seismic Coefficients C_a and C_v of 0.33 and 0.45, respectively. In addition, a Near-Source Factor (N_V) of 1.0 is appropriate for the site. These values are based on the 1997 Uniform Building Code (UBC).

13. Design below-grade retaining walls for active earth pressure conditions using an equivalent fluid density of 83 pcf, a uniformly distributed surcharge pressure of 133 psf and a reverse triangular dynamic earth pressure of 10 pcf * H.

14. Design below-grade retaining walls for at-rest earth pressure conditions using an equivalent fluid density of 93 pcf and a uniformly distributed surcharge pressure of 200 psf.

15. Design below-grade retaining walls using an equivalent fluid density of 200 pcf for passive soil pressure conditions.

16. Include buoyant forces in slab and foundation design for below-grade structures.

17. A friction coefficient of 0.4 is appropriate for cast-in-place concrete foundations constructed on compacted, imported crushed rock or native gravelly soils.

18. Use only select fill as backfill within ±5 feet of the walls. Compact using only hand-operated equipment to avoid inducing lateral loads. Alternatively, controlled density fill (CDF) may be used as wall backfill where access is limited or where placement and compaction of granular material is impractical or unsafe.

Design and Construction of At-Grade Foundations and Slabs

19. Design all shallow continuous wall footings (lab/administration and thickening/dewatering buildings) using an allowable bearing pressure of 2,000 psf.

20. Construct the footings on a nominal 6-inch thick leveling course of structural fill overlying native subgrade material. This assumes that the base of all footings will extend at least 18 inches below the finished grade or paved surface.

21. Use a modulus of subgrade reaction, k_s, of 125 kcf for floor slab design. These values assume that the slab will be supported by at least 12 inches of structural fill underlain by medium stiff silt. Reinforce all floor slabs to reduce cracking and warping.

22. Design the buildings using a Seismic Zone Factor (Z) of 0.30. We selected an S_c Soil Profile Type for the site with corresponding Seismic Coefficients C_a and C_v of 0.33 and 0.45, respectively. In addition, a Near-Source Factor (N_V) of 1.0 is appropriate for the site. These values are based on the 1997 Uniform Building Code (UBC).

23. Structural fill should be used for imported fill to raise grades beneath buildings and floor slabs.

24. Provide a nominal 4 inches of compacted, crushed gravel or rock under all other isolated concrete slabs and sidewalks. Reinforce all concrete slabs.

Construction Access/Staging

During wet weather construction, access roads and staging areas will have to be prepared to protect the subgrade and provide access for construction traffic. Stabilization fabric and a minimum of 18 inches of granular fill capped with 6 inches of base rock should be placed in these areas. We recommend that the construction access road and staging areas be located within future roads and parking areas.

Site Preparation

We recommend that the foundation area under the structures be prepared as follows:

25. Install a dewatering system as soon as possible, prior to excavating the below-grade structures. We suggest that dewatering wells be installed to cut off the water flow in the granular soils to stabilize the open excavations and prevent them from caving.

26. Excavate the existing fill from beneath the building footprint to the required grade or a minimum depth of ±3 feet. During wet weather conditions, use an excavator equipped with a smooth-blade bucket, operating from a bench above subgrade level, to excavate to the design subgrade elevation and locally overexcavate unsuitable soils. The excavation limits should extend a minimum of 5 feet beyond the limits of the foundations. Excavated material, which is classified as granular site fill, may be stockpiled on-site for reuse. During wet weather conditions, excavated material will be unsuitable for use as structural fill due to excessive moisture. Therefore, they should be stockpiled on-site and protected from additional moisture for use during dry weather or hauled from the site.

27. Where granular materials are exposed at the subgrade elevation, compact the subgrade to a depth of at least 12 inches. Moisture conditioning of the granular subgrade may be required prior to compaction. Compaction should not be attempted if the subgrade soils are too wet (wet weather construction). During wet weather construction, the approved subgrade should be covered as soon as practical and excavation work should be limited to an area that can be backfilled the same day. The need for compaction should be evaluated by one of our representatives during construction.

28. Place the required amount of granular site fill and/or structural fill in lifts within the completed excavations to the required grade. The granular site fill should be capped by a minimum of 6 inches of structural fill. During wet weather construction, place a stabilization geotextile over the approved subgrade. The fabric should be stretched taut and wrinkle-free and securely pinned or weighted in place. A minimum overlap of 24 inches should be provided between adjacent pieces of fabric.

29. Place an initial lift of 12 inches of stabilization rock over the geotextile to create a working surface for equipment. The thickness of the stabilization rock may have to be thickened to 18 inches in areas required to support heavy construction traffic. The initial lift of fill should be placed using light, track-mounted equipment. The surface of the initial lift should be compacted using multiple passes of a smooth drum, vibratory roller. A representative of FEI should monitor the compaction process. Compaction should continue until no appreciable improvement in densification is achieved. Dewatering should be provided throughout the compaction process. Placement and compaction of the fill may not be practical during periods of heavy rainfall.

30. Compact and document all fill as specified in Item 5 in the general earthwork section.

31. Periodically proof-roll the building pad fill with a suitable sized piece of construction equipment to identify areas of soft or pumping fill. Areas of soft or pumping fill should be excavated to a depth to be determined in the field and replaced with compacted stabilization rock.

32. Grade the ground surface surrounding all buildings to promote runoff away from the foundations. During wet weather conditions, slope the subgrade, to the extent possible, to drain to sump locations. Provide for dewatering throughout excavation and fill placement and compaction. Sumps should be located outside the limits of the footings.

33. A FEI representative should be present on-site during excavation to evaluate the suitability of the exposed subgrade. Areas of excessively soft or wet material should be identified and excavated as the work progresses.

34. Keep loaded trucks or heavy construction equipment traveling on the completed fill to a minimum. Construction traffic should be limited, during wet weather construction, on the rock section until the total rock thickness is at least 2 feet.

35. Do not compact the bottom of footing excavations. Footing construction during wet weather will require dewatering of the excavations and removal of any soft or disturbed fill at the bottom of the excavation.

36. Shoring will be needed in all trenches to protect workers from sloughing or caving soils.

37. Pipe bedding and backfill should consist of structural fill or imported, well-graded rock. On site granular soils should not be used for pipe bedding or backfill in the pipe zone.

Drainage

38. Install foundation drains along the perimeter of the proposed lab/administration building and thickening/dewatering facility. The drains should consist of 3 or 4-inch diameter, perforated or slotted, PVC pipe wrapped in a filter fabric with an AOS of between 70 and 100. The flowline of the pipe should be set at least 18 inches below the bottom of the slab. The pipe should be bedded in at least 4 inches of drain rock and backfilled to within 12 inches of the ground surface. The entire mass of the drain rock should be wrapped in a filter fabric (meeting the requirements of Item 6) that laps at least 12 inches at the top.

39. Provide clean-outs at appropriate locations for future maintenance of the drainage system.

40. Discharge the water from the drain system into the nearest catch basin, manhole or storm drain. Do not discharge water onto adjacent slopes.

41. Roof drains and surface runoff should be collected and discharged into a storm drain system.

Subgrade Preparation and Pavement Construction

We recommend waiting until dry weather to construct the pavement areas. This approach will permit compaction of the subgrade, which will result in a thinner base rock section. If this is not feasible, the designer should assume that the subgrade cannot be prepared and that a thicker base rock section will be required for wet weather construction. Access roads and staging areas outside the building pad areas will have to be prepared to protect the subgrade during wet weather construction. Therefore, a minimum of 24 inches of granular fill should be placed.

42. Excavate existing fill in pavement areas ±12 inches below existing grades in areas of fill and below subgrade elevation in areas of cut. Excavated material, which may be classified as granular site fill, may be stockpiled on-site for reuse. High plasticity clay, debris or organic material should be separated and removed from the site or placed outside the construction limits.

43. During, or in anticipation of, wet weather construction, excavate pavement areas a minimum of 24 inches. Excavated material, which may be classified as granular site fill, can be stockpiled and protected from rainfall for re-use.

44. A FEI representative should be present on-site during excavation to evaluate the suitability of the exposed subgrade (wet weather). Areas of excessively soft or wet material should be identified and excavated as the work progresses.

45. Remove organics, plastic clay or debris exposed in the excavations. If predominately silt is exposed at the subgrade level, it should be scarified, moisture conditioned, and compacted prior to replacing the granular site fill (subbase). In areas where granular materials are exposed at the subgrade elevation, compact the subgrade to a depth of at least 12 inches (dry weather). Moisture conditioning of the fine-grained and granular subgrade may be required prior to compaction (dry weather). Compaction should not be attempted if the subgrade soils are too wet. The need for scarification, aeration and moisture conditioning should be evaluated by one of our representatives during construction.

46. Place the required amount of granular site fill and/or imported granular fill (dry weather) or stabilization rock (wet weather) to achieve design subgrade elevations.

47. Place a stabilization geotextile over the approved subgrade (wet weather). The fabric should be stretched taut and wrinkle-free and securely pinned or weighted in place. A minimum overlap of 24 inches should be provided between adjacent pieces of fabric. Stabilization geotextile will not be required during dry weather.

48. Place an initial lift of 12 inches of stabilization rock over the geotextile. The initial lift of fill should be placed and walked in using light, track-mounted equipment (wet weather).

49. The stabilization rock surface should be capped with a minimum of 6 inches of structural fill to provide a working surface.

50. Compaction of the pavement areas should not be attempted until the first lift of structural fill is in place during wet weather. Construction traffic should not be allowed on the rock section until the thickness is greater than 2 feet. Placement and compaction of the fill may not be practical during periods of heavy rainfall.

51. Compact and document all fill as specified in Item 5 of the general earthwork section.

52. Proof-roll the completed subgrade and overexcavate and replace any areas of subgrade pumping with compacted base rock (structural fill).

53. Use structural fill as base rock under all pavements and compact as specified. Do not allow loaded trucks or heavy construction equipment on the finished base rock prior to paving.

54. Prior to paving, any portion of the base rock section that is contaminated or disturbed should be removed and replaced with compacted crushed rock.

55. Provide a minimum flexible pavement section of 3 inches of asphalt over 8 inches of base rock (structural fill).

56. Compact the asphalt concrete pavement to a minimum of 91% relative compaction according to the theoretical maximum density calculated from the Rice specific gravity.

DESIGN REVIEW/CONSTRUCTION OBSERVATION/TESTING

We should be provided the opportunity to review all drawings and specifications that pertain to site preparation and foundation construction for the structures, buildings and pavements. Site preparation will require field confirmation of excavation, sorting, and compaction of existing fill and removal of plastic clay beneath foundations. Mitigation of any subgrade pumping will also require engineering review and judgment. That judgment should be provided by one of our representatives. Frequent field density tests should be run on all engineered fills. We recommend that we be retained to provide the necessary construction observation and testing.

VARIATION OF SUBSURFACE CONDITIONS, USE OF THIS REPORT AND WARRANTY

The analysis, conclusions, and recommendations contained herein are based on the assumption that the soil profiles and the ground water levels encountered in the borings and test pits are representative of overall site conditions. The above recommendations assume that we will have the opportunity to review final drawings and be present during construction to confirm assumed foundation conditions. No changes in the enclosed recommendations should be made without our approval. We will assume no responsibility or liability for any engineering judgment, inspection, or testing performed by others.

This report was prepared for the exclusive use of Carollo Engineers and their design consultants for the Cottage Grove WWTP Improvement project in Cottage Grove, Oregon. Information contained herein should not be used for other sites or for unanticipated construction without our written consent. This report is intended for planning and design purposes. Contractors using this information to estimate construction quantities or costs do so at their own risk. Our services do not include any survey or assessment of potential surface contamination or contamination of the soil or ground water by hazardous or toxic materials. We assume that those services, if needed, have been completed by others.

Our work was done in accordance with generally accepted soil and foundation engineering practices. No other warranty, expressed or implied, is made.

REFERENCES

Geomatrix Consultants, 1995, Final report: Seismic design mapping, State of Oregon: Prepared for Oregon Department of Transportation, Salem Oregon.

Walker, G.W., and MacLeod, N.S., 1991, Geologic Map of Oregon: U.S. Geological Survey.

Wells, F.G., and Peck, D.L., 1979, Geologic Map of Oregon West of the 121st Meridian: U.S. Geological Survey, I-325.

Yeats, R.S., Graven, E.P., Werner, K.S., Goldfinger, C., and Popowski, T.A., 1996, Tectonics of the Willamette Valley, Oregon: *in* Assessing earthquake hazards and reducing risk in the Pacific Northwest, U.S. Geological Survey Professional Paper 1560, p. 183-222.

Appendix A

Figures

Professional
Geotechnical
Services

Foundation Engineering, Inc.

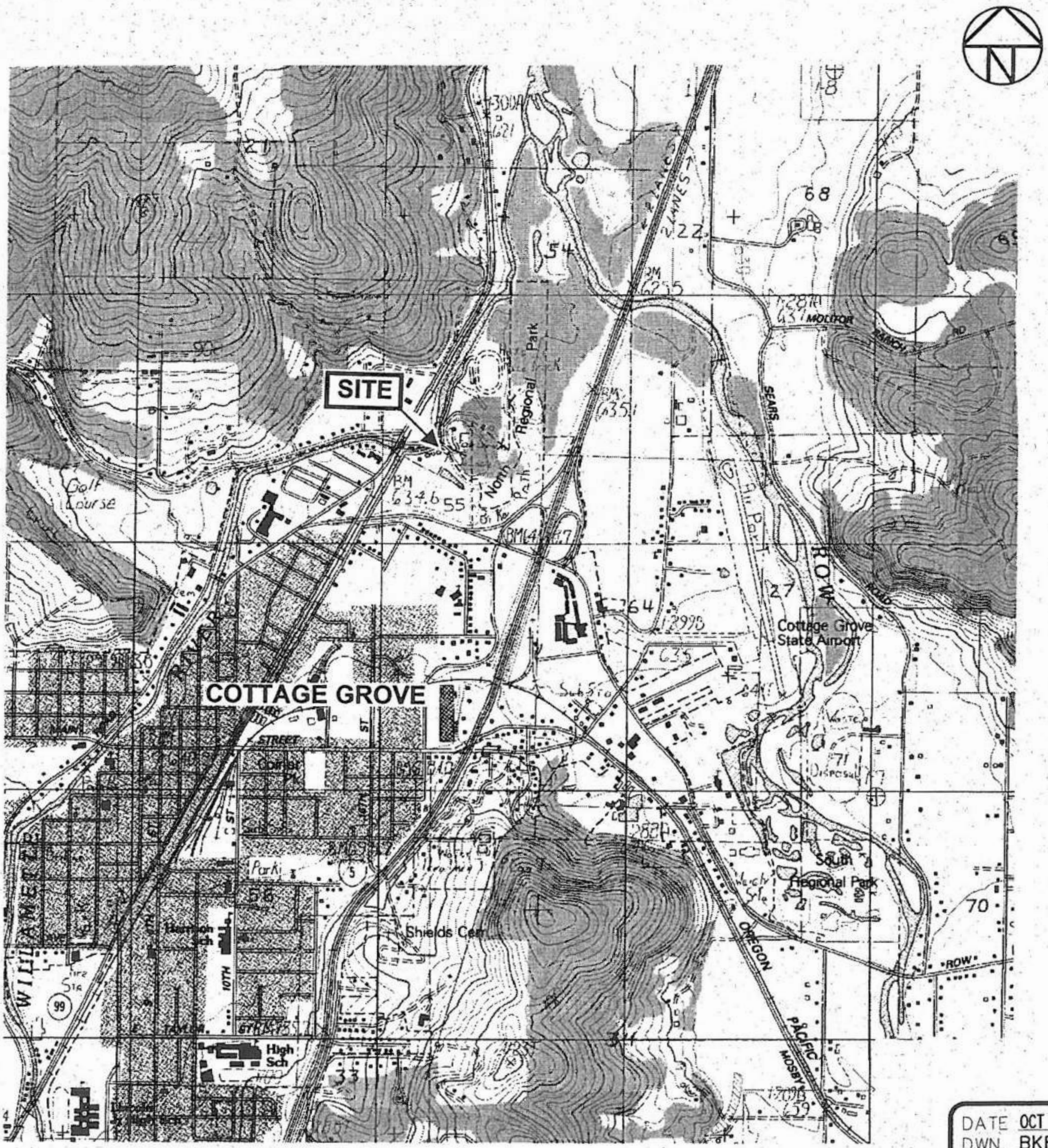

DATE OCT 2002
DWN. BKF
APPR.
REVIS.
PROJECT NO.
2021102

FOUNDATION ENGINEERING INC.
PROFESSIONAL GEOTECHNICAL SERVICES
820 NW CORNELL AVENUE
CORVALLIS, OR 97330-4517
BUS. (541) 757-7645 FAX (541) 757-7650

VICINITY MAP

COTTAGE GROVE WWTP IMPROVEMENTS
COTTAGE GROVE, OREGON

FIGURE NO.
1A

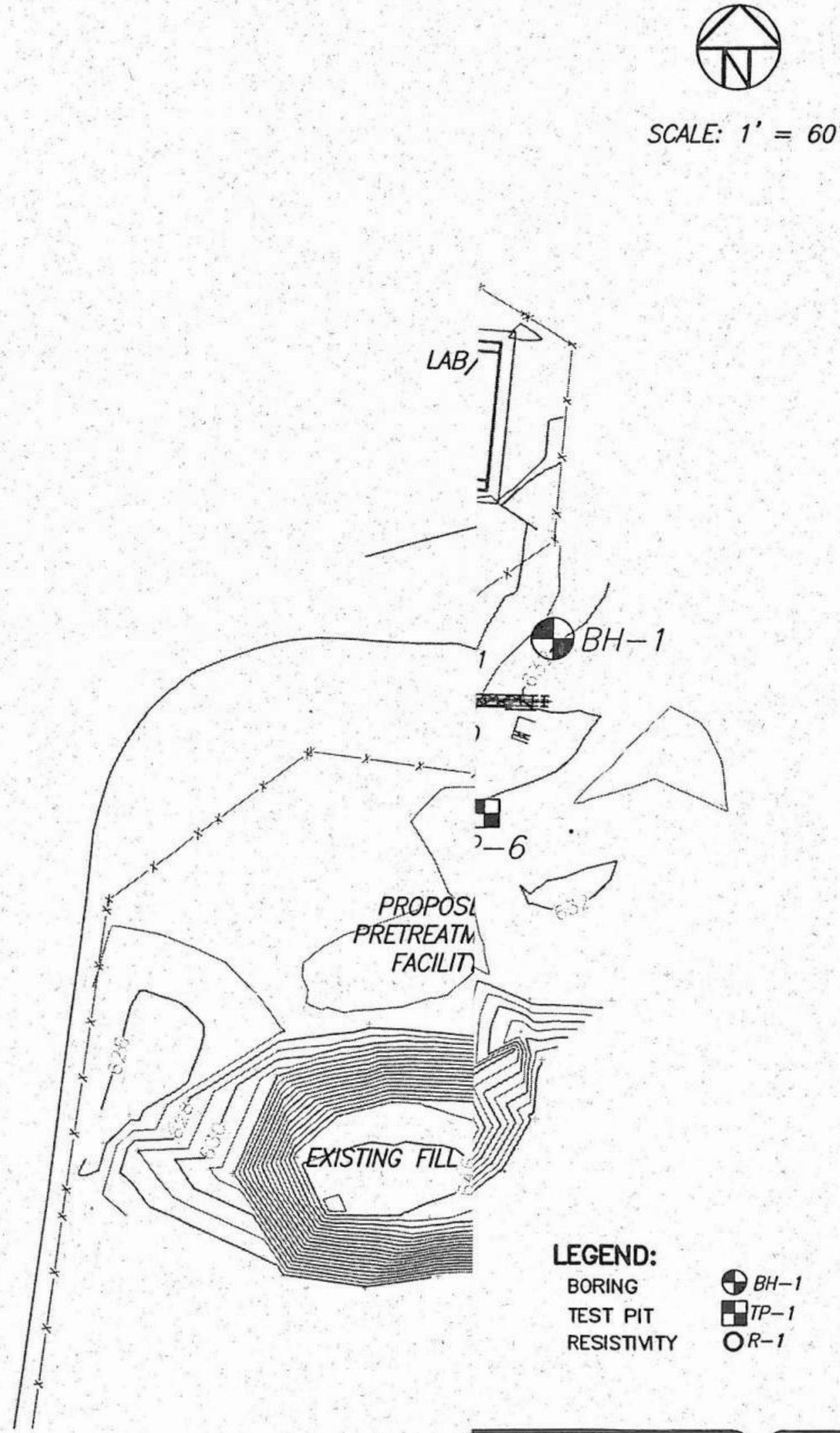

NOTES:

1. TEST PIT AND BORING LOCATIONS WERE ES
   AND ARE APPROXIMATE ONLY.
2. SEE REPORT FOR A DISCUSSION OF SUBSU
3. BASE MAP WAS PROVIDED BY CAROLLO EN

CATIONS

IMPROVEMENTS
REGON

FIGURE NO.

2A

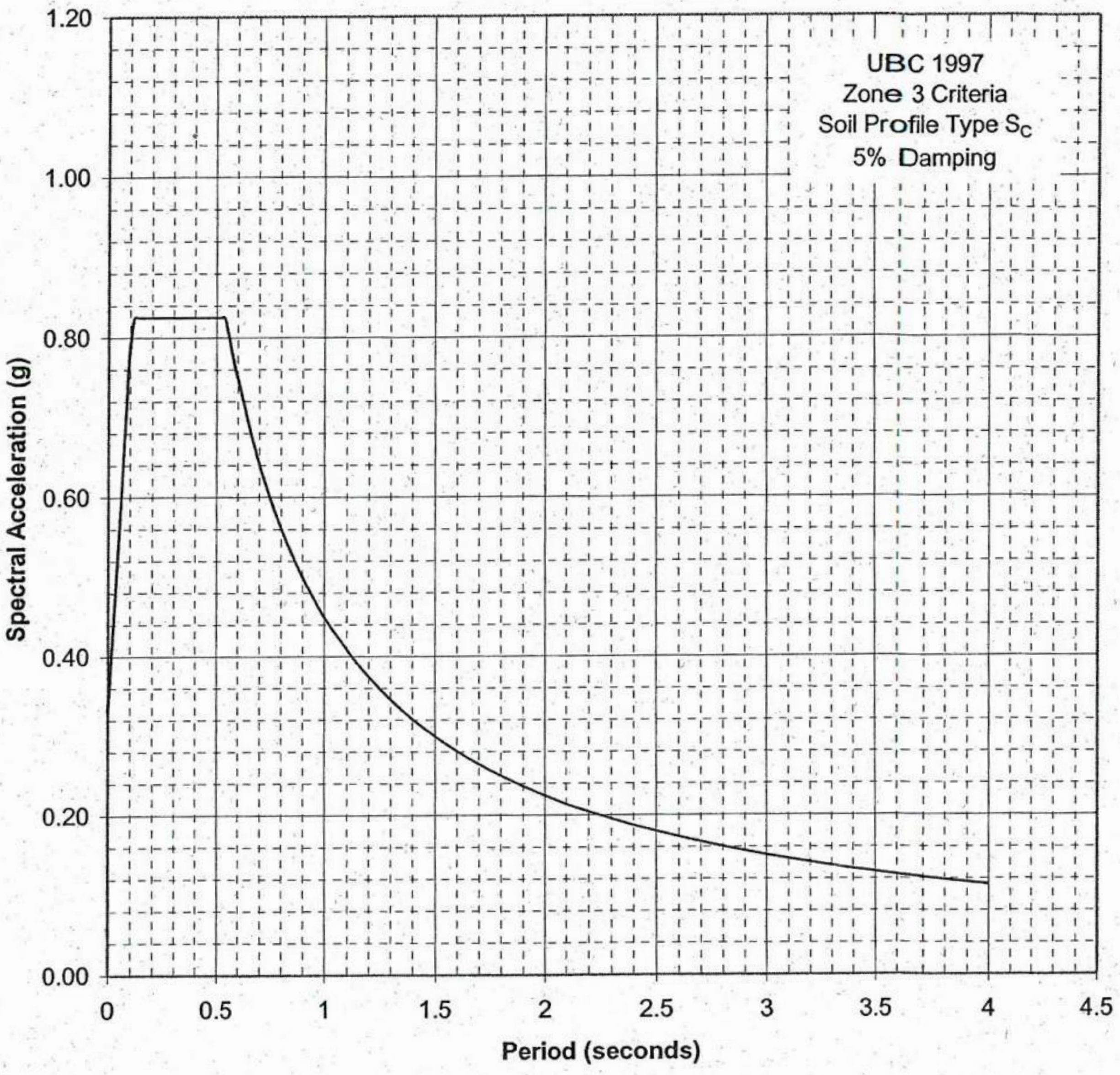

Figure 3A.
Site Response Spectrum
Zone 3
Cottage Grove WWTP
Cottage Grove, Oregon
FEI Project No.: 202-1-102

Appendix B

Boring & Test Pit Logs

Professional
Geotechnical
Services

Foundation Engineering, Inc.

DISTINCTION BETWEEN FIELD LOGS AND FINAL LOGS

A field log is prepared for each boring or test pit by our field representative. The log contains information concerning sampling depths and the presence of various materials such as gravel, cobbles, and fill, and observations of ground water. It also contains our interpretation of the soil conditions between samples. The final logs presented in this report represent our interpretation of the contents of the field logs and the results of the laboratory examinations and tests. Our recommendations are based on the contents of the final logs and the information contained therein and not on the field logs.

VARIATION IN SOILS BETWEEN TEST PITS AND BORINGS

The final log and related information depict subsurface conditions only at the specific location and on the date indicated. Those using the information contained herein should be aware that soil conditions at other locations or on other dates may differ. Actual foundation or subgrade conditions should be confirmed by us during construction.

TRANSITION BETWEEN SOIL OR ROCK TYPES

The lines designating the interface between soil, fill or rock on the final logs and on subsurface profiles presented in the report are determined by interpolation and are therefore approximate. The transition between the materials may be abrupt or gradual. Only at boring or test pit locations should profiles be considered as reasonably accurate and then only to the degree implied by the notes thereon.

SAMPLE OR TEST SYMBOLS

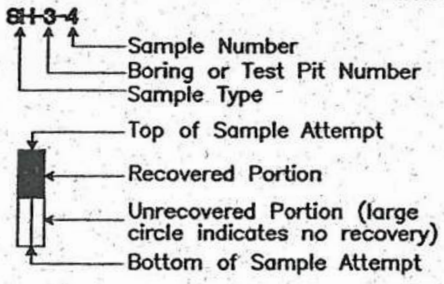

S — Grab Samples
SS — Standard Penetration Test Sample (split-spoon)
SH — Thin-walled Shelby Tube Sample
C — Core Sample
CS — Continuous Sample

▲ Standard Penetration Test Resistance equals the number of blows a 140 lb. weight falling 30 in. is required to drive a standard split-spoon sampler 1 ft. Practical refusal is equal to 50 or more blows per 6 in. of sampler penetration.

● Water Content (%).

UNIFIED SOIL CLASSIFICATION SYMBOLS

G — Gravel
S — Sand
M — Silt
C — Clay
Pt — Peat

W — Well Graded
P — Poorly Graded
L — Low Plasticity
H — High Plasticity
O — Organic

FIELD SHEAR STRENGTH TEST

Shear strength measurements on test pit side walls, blocks of soil or Shelby tube samples are typically made with Torvane or pocket penetrometer devices.

TYPICAL SOIL/ROCK SYMBOLS

▩	Sand	▥	Silt
▨	Clay	▩	Gravel
▩	Basalt	▤	Siltstone

WATER TABLE

▽ Water Table Location

(1/31/00) Date of Measurement

▯ Piezometer Tip Location (if used)

FOUNDATION ENGINEERING INC.
PROFESSIONAL GEOTECHNICAL SERVICES
820 NW CORNELL AVENUE
CORVALLIS, OR 97330-4517
BUS. (541) 757-7645 FAX (541) 757-7650

SYMBOL KEY
BORING AND TEST PIT LOGS

Explanation of Common Terms Used in Soil Descriptions

Field Identification	Cohesive Soils			Granular Soils	
	SPT	S_u^* (tsf)	Term	SPT	Term
Easily penetrated several inches by fist.	0 – 1	< 0.125	Very Soft	0 – 4	Very Loose
Easily penetrated several inches by thumb.	2 – 4	0.125–0.25	Soft	5 – 10	Loose
Can be penetrated several inches by thumb with moderate effort.	5 – 8	0.25 – 0.50	Medium Stiff (Firm)	11 – 30	Medium Dense
Readily indented by thumb but penetrated only with great effort.	9 – 15	0.50 – 1.0	Stiff	31 – 50	Dense
Readily indented by thumbnail.	16 – 30	1.0 – 2.0	Very Stiff	> 50	Very Dense
Indented with difficulty by thumbnail.	31 – 60	> 2.0	Hard		

* Undrained shear strength

Term	Soil Moisture Field Description
Dry	Absence of moisture. Dusty. Dry to the touch.
Damp	Soil has moisture. Cohesive soils are below plastic limit and usually moldable.
Moist	Grains appear darkened, but no visible water. Silt/clay will clump. Sand will bulk. Soils are often at or near plastic limit.
Wet	Visible water on larger grain surfaces. Sand and cohesionless silt exhibit dilatancy. Cohesive silt/clay can be readily remolded. Soil leaves wetness on the hand when squeezed. "Wet" indicates that the soil is wetter than the optimum moisture content and above the plastic limit.

Term	PI	Plasticity Field Test
Nonplastic	0 – 3	Cannot be rolled into a thread.
Low Plasticity	3 – 15	Can be rolled into a thread with some difficulty.
Medium Plasticity	15 – 30	Easily rolled into thread.
High Plasticity	> 30	Easily rolled and rerolled into thread.

Term	Soil Structure Criteria
Stratified	Alternating layers at least 1 inch thick – describe variation.
Laminated	Alternating layers at less than 1 inch thick – describe variation.
Fissured	Contains shears and partings along planes of weakness.
Slickensides	Partings appear glossy or striated.
Blocky	Breaks into lumps – crumbly.
Lensed	Contains pockets of different soils – describe variation.

Term	Soil Cementation Criteria
Weak	Breaks under light finger pressure.
Moderate	Breaks under hard finger pressure.
Strong	Will not break with finger pressure.

FOUNDATION ENGINEERING INC.
PROFESSIONAL GEOTECHNICAL SERVICES
820 NW CORNELL AVENUE
CORVALLIS, OR 97330-4517
BUS. (541) 757-7645 FAX (541) 757-7650

COMMON TERMS
SOIL DESCRIPTIONS

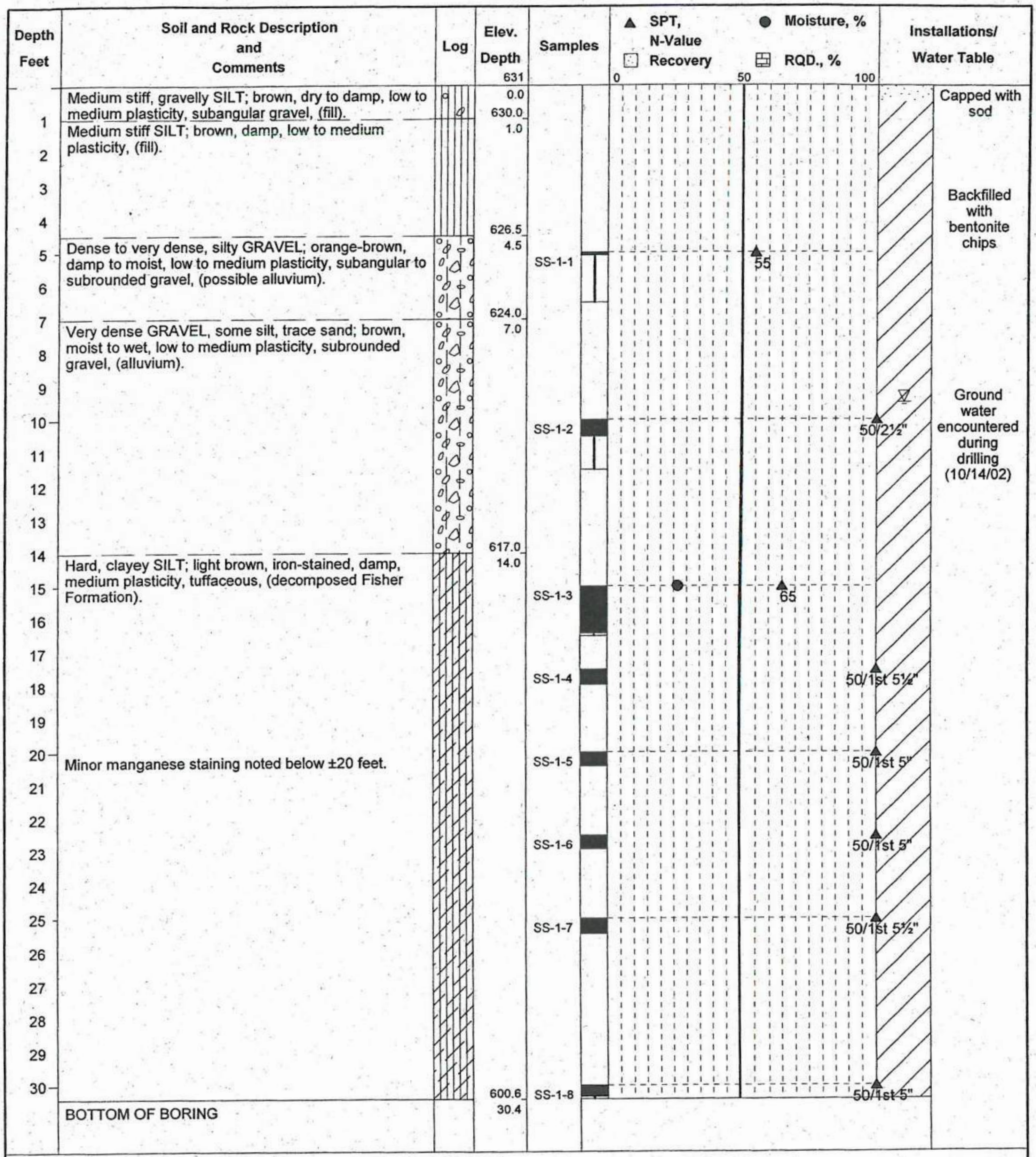

Depth Feet	Soil and Rock Description and Comments	Elev. Depth	Samples	▲ SPT, N-Value	Installations/ Water Table
0	Medium stiff, gravelly SILT; brown, dry to damp, low to medium plasticity, subangular gravel, (fill).	631 0.0			Capped with sod
1	Medium stiff SILT; brown, damp, low to medium plasticity, (fill).	630.0 1.0			Backfilled with bentonite chips
4.5	Dense to very dense, silty GRAVEL; orange-brown, damp to moist, low to medium plasticity, subangular to subrounded gravel, (possible alluvium).	626.5 4.5	SS-1-1	55	
7	Very dense GRAVEL, some silt, trace sand; brown, moist to wet, low to medium plasticity, subrounded gravel, (alluvium).	624.0 7.0			
9					∇ Ground water encountered during drilling (10/14/02)
10			SS-1-2	50/2½"	
14	Hard, clayey SILT; light brown, iron-stained, damp, medium plasticity, tuffaceous, (decomposed Fisher Formation).	617.0 14.0			
15			SS-1-3	65	
17.5			SS-1-4	50/1st 5½"	
20	Minor manganese staining noted below ±20 feet.		SS-1-5	50/1st 5"	
22.5			SS-1-6	50/1st 5"	
25			SS-1-7	50/1st 5½"	
30			SS-1-8	50/1st 5"	
30.4	BOTTOM OF BORING	600.6 30.4			

▲ SPT, N-Value ● Moisture, % ⚀ Recovery ⊞ RQD., %

0 50 100

Project No.: 2021102

Surface Elevation: 631.0 feet (Approx.)

Date of Boring: October 14, 2002

Boring Log: BH-1

Cottage Grove WWTP Improvements

Cottage Grove, Oregon

Foundation Engineering, Inc.

Depth Feet	Soil and Rock Description and Comments	Elev. Depth 628	Samples	SPT, N-Value	Installations/ Water Table
0	Medium dense, silty GRAVEL; brown, dry to damp, low plasticity, subangular, medium to coarse gravel, (fill).	0.0			Capped with sod
3	Medium stiff SILT, trace gravel; brown, damp, low to medium plasticity, subangular gravel, (fill).	625.0 3.0			Backfilled with bentonite chips
5	Soft to medium stiff SILT, some organics, trace sand; grey, moist to wet, medium plasticity, (alluvium).	623.0 5.0	SS-2-1	8	
10			SH-2-2		
12	Silt becomes very soft at ±12 feet.		SS-2-3	11	Ground water encountered during drilling (10/15/02)
12.5	Very dense GRAVEL, some silt and sand; brown, wet, low to medium plasticity, subangular to subrounded gravel, (alluvium). Coarse gravel encountered below ±14 feet.	615.5 12.5			
15			SS-2-4	50/2½"	
16	Hard SILT, some clay; purple to blue-grey, damp, medium plasticity, tuffaceous, (decomposed Fisher Formation).	612.0 16.0			
17.5			SS-2-5	50/6"	
20	Sand to gravel-sized decomposed volcaniclastics noted below ±20 feet.		SS-2-6	90/11"	
25			SS-2-7	92	
26.5	BOTTOM OF BORING	601.5 26.5			

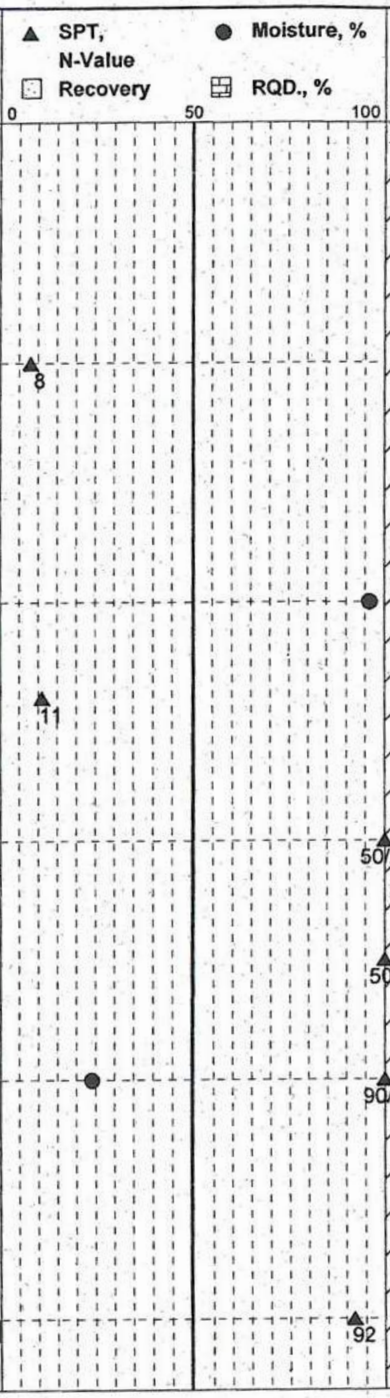

Project No.: 2021102

Surface Elevation: 628.0 feet (Approx.)

Date of Boring: October 15, 2002

Foundation Engineering, Inc.

Boring Log: BH-2

Cottage Grove WWTP Improvements

Cottage Grove, Oregon

Depth Feet	Soil and Rock Description and Comments
0–5	Soft, gravelly SILT; dark brown to brown, damp to moist, medium plasticity, subangular gravel, (fill).
5–11.5	Very dense GRAVEL, some silt; brown, moist to wet, low plasticity, subrounded gravel, (alluvium). Coarse gravel encountered below ±7 feet.
11.5–20.9	Hard, clayey SILT, some decomposed volcaniclastics; blue-grey, damp, medium plasticity, tuffaceous, (decomposed Fisher Formation).
20.9	BOTTOM OF BORING

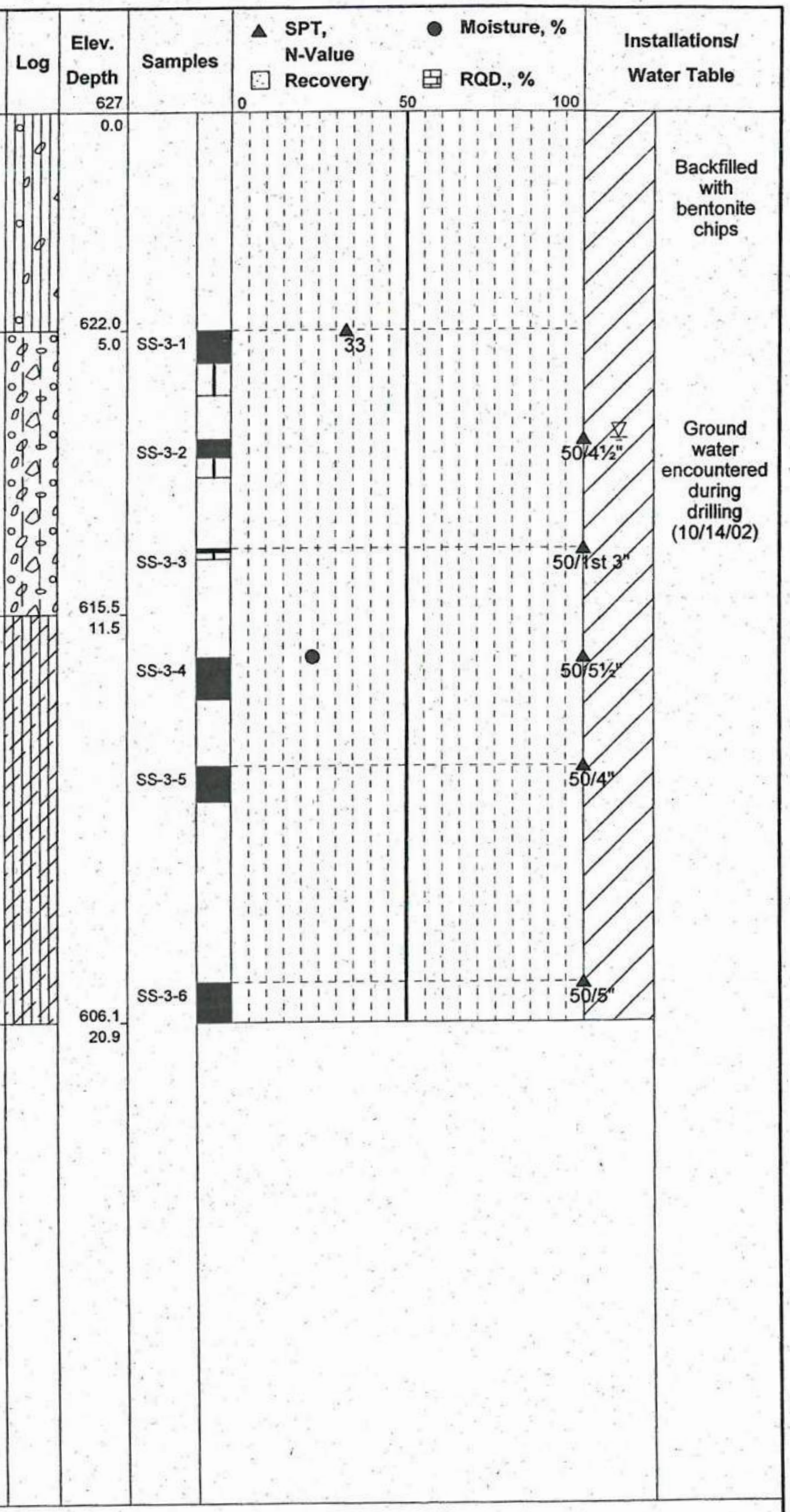

Project No.: 2021102

Surface Elevation: 627.0 feet (Approx.)

Date of Boring: October 14, 2002

Boring Log: BH-3

Cottage Grove WWTP Improvements

Cottage Grove, Oregon

Foundation Engineering, Inc.

Depth Feet	Soil and Rock Description and Comments	Log	Elev. Depth 627	Samples	▲ SPT, N-Value ⊡ Recovery ● Moisture, % ⊟ RQD., % (0 50 100)	Installations/ Water Table
	Medium dense, silty GRAVEL, some sand; orange-brown, dry to damp, low plasticity, subangular gravel, (fill).		0.0			Capped with sod Backfilled with bentonite chips
5	Very dense GRAVEL, some silt and sand; brown, moist to wet, low plasticity, subrounded gravel, (alluvium).		622.0 5.0	SS-4-1	19	
9	Coarse gravel encountered below ±9 feet.					
10				SS-4-2	53	∇ Ground water encountered during drilling (10/14/02)
13				SS-4-3	50/5"	
	Hard, clayey SILT, some decomposed volcaniclastics; blue-grey, damp, medium plasticity, tuffaceous, (decomposed Fisher Formation).		613.5 13.5			
15				SS-4-4	50/4"	
18				SS-4-5	● 50/5"	
20				SS-4-6	50/5"	
25				SS-4-7	50/4½"	
	BOTTOM OF BORING		601.1 25.9			

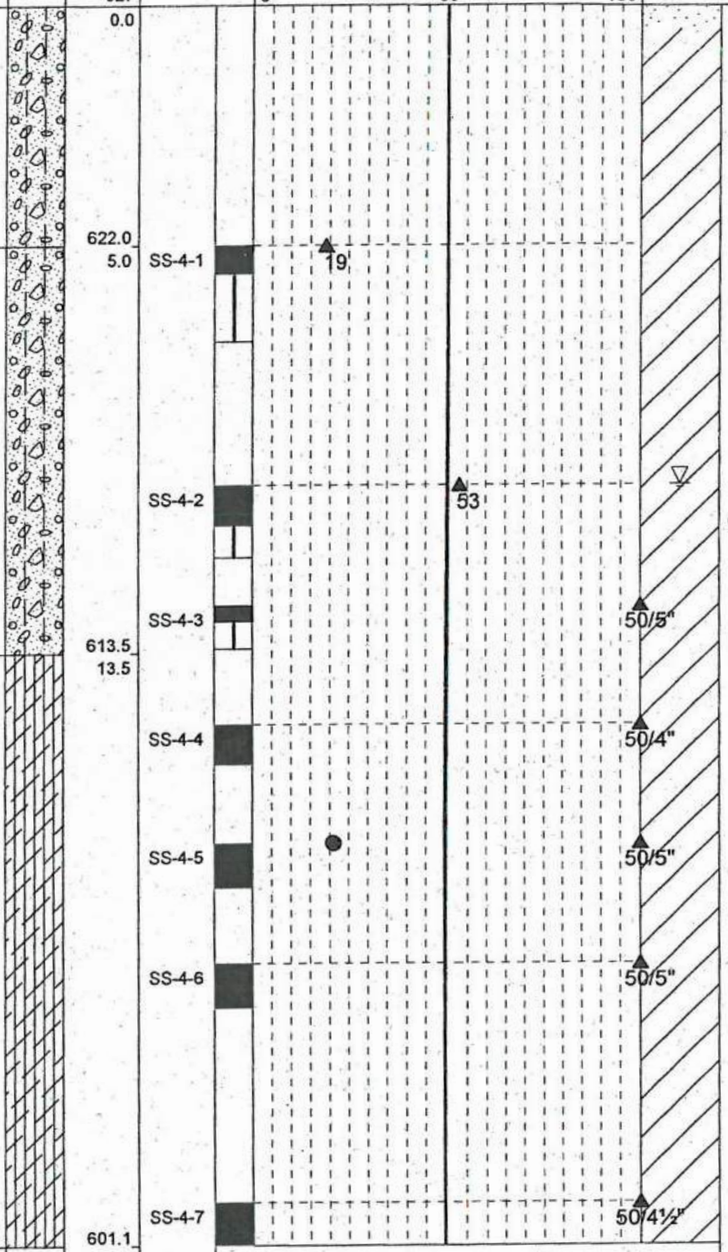

Project No.: 2021102

Surface Elevation: 627.0 feet (Approx.)

Date of Boring: October 14, 2002

Boring Log: BH-4

Cottage Grove WWTP Improvements

Cottage Grove, Oregon

Foundation Engineering, Inc.

Depth Feet	Soil and Rock Description and Comments	Log	Elev. Depth 627	Samples	Installations/ Water Table
1 2 3 4	Stiff SILT, trace gravel; dark brown to brown, damp to moist, low plasticity, (topsoil/fill).		0.0	SS-5-1	Capped with sod Backfilled with cuttings
5 6 7 8 9	Stiff to medium stiff SILT, some clay, trace sand; light brown to orange-brown, damp to moist, medium plasticity, (alluvium).		622.5 4.5	SS-5-2 SS-5-3	
10 11	Dense, sandy GRAVEL; orange-brown, wet, fine to medium sand, subrounded gravel, (alluvium).		617.0 10.0	SS-5-4	Ground water encountered during drilling (10/15/02)
	BOTTOM OF BORING		615.5 11.5		

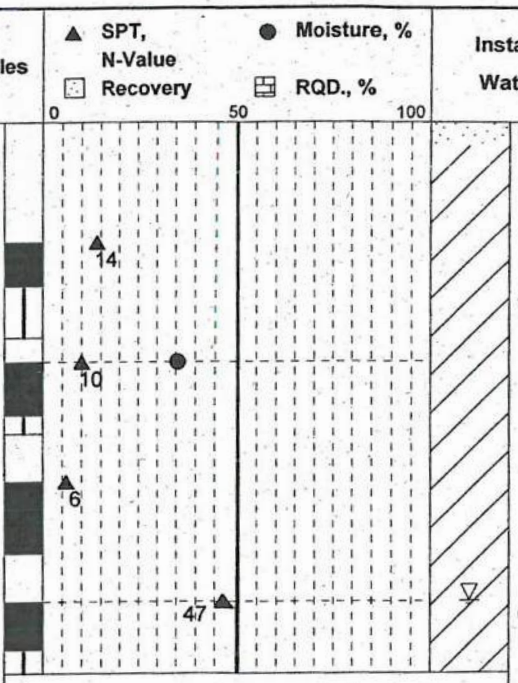

Project No.: 2021102

Surface Elevation: 627.0 feet (Approx.)

Date of Boring: October 15, 2002

Boring Log: BH-5

Cottage Grove WWTP Improvements

Cottage Grove, Oregon

Foundation Engineering, Inc.

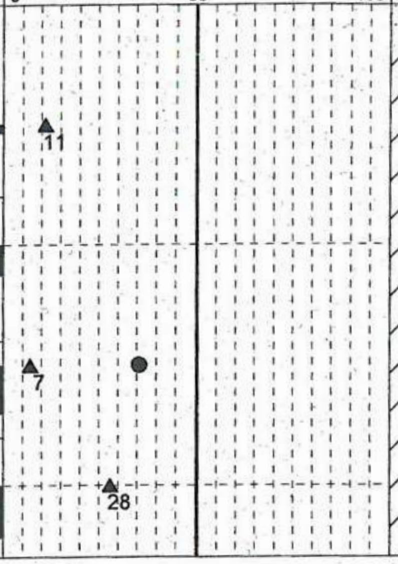

Depth Feet	Soil and Rock Description and Comments	Log	Elev. Depth	Samples	▲ SPT, N-Value ☐ Recovery ● Moisture, % ⊞ RQD., % (0 50 100)	Installations/ Water Table
	Stiff SILT; dark brown to black, damp, medium plasticity, (topsoil/fill).		628 0.0			Capped with sod
1						
2						
3	Stiff SILT; orange-brown, damp to moist, medium plasticity, (alluvium).		625.4 2.6	SS-6-1	11	Backfilled with cuttings
4						
5				SH-6-2		
6						
7						
8	Trace fine sand noted below ±7½ feet.			SS-6-3	7	
9						
10	Medium dense, sandy GRAVEL; orange-brown, damp to moist, fine to medium sand, subangular to subrounded gravel, (alluvium).		618.5 9.5	SS-6-4	28	
11						
	BOTTOM OF BORING		616.5 11.5			

Project No.: 2021102

Surface Elevation: 628.0 feet (Approx.)

Date of Boring: October 15, 2002

Foundation Engineering, Inc.

Boring Log: BH-6

Cottage Grove WWTP Improvements

Cottage Grove, Oregon

Comments	Depth, Feet	Sample #	Location	Class Symbol	Water Table	C, TSF	Symbol	Soil and Rock Description
Surface: grass.	1-	S-1-1	■					Medium stiff, gravelly SILT, trace cobbles, sand and fine roots; brown, dry to damp, low plasticity, rounded gravel, fine sand, (fill).
	2-	S-1-2	■					Very stiff SILT, some clay; brown to orange-brown, dry to damp, medium plasticity, (alluvium).
	3-							
	4-							
	5-							
	6-							
	7-							
	8-							Dense, sandy GRAVEL, trace silt, some cobbles with depth; orange-brown, moist to wet, fine to medium sand, rounded to subrounded gravel and cobbles, (alluvium).
	9-							
	10-							
	11-							
Slow seepage noted at ±12 feet.	12-	S-1-3	■					Stiff to very stiff, clayey SILT; light brown to blue-grey, iron-stained, damp to moist, medium plasticity, tuffaceous, (decomposed Fisher Formation).
	13-							BOTTOM OF TEST PIT
	14-							

Project No.: 2021102

Surface Elevation: 628.0 feet (Approx.)

Date of Test Pit: October 18, 2002

Test Pit Log: TP-1

Cottage Grove WWTP Improvements

Cottage Grove, Oregon

Comments	Depth, Feet	Sample #	Location	Class Symbol	Water Table	C, TSF	Symbol	Soil and Rock Description
Surface: weeds.	1-							Medium stiff SILT, some gravel, A/C and concrete fragments; brown, dry to damp, low plasticity, (fill). Medium stiff SILT, some clay, trace gravel; orange-brown, damp, low plasticity, (fill).
Excavation conducted in side of south stockpile.	2-							Medium dense, CRUSHED ROCK; grey, dry, ¾-inch minus, angular, (fill).
No water encountered to the limit of excavation.	3-							BOTTOM OF TEST PIT
	4-							
	5-							
	6-							
	7-							
	8-							
	9-							
	10-							
	11-							
	12-							
	13-							
	14-							

Project No.: 2021102

Surface Elevation: 630.0 feet (Approx.)

Date of Test Pit: October 18, 2002

Test Pit Log: TP-2

Cottage Grove WWTP Improvements

Cottage Grove, Oregon

Comments	Depth, Feet	Sample #	Location	Class Symbol	Water Table	C, TSF	Symbol	Soil and Rock Description
Surface: gravel and weeds.								Medium stiff, gravelly SILT, trace sand; brown, dry to damp, low plasticity, (fill).
	1-							
	2-							Medium stiff SILT; orange-brown, damp to moist, medium plasticity, blocky structure, (alluvium).
	3-	S-3-1	■			0.40		
	4-							
	5-							
	6-							
	7-							
Clay and iron-staining noted at contact between silt and sandy gravel (±8 feet). No water encountered to the limit of excavation.	8-							Dense, sandy GRAVEL and COBBLES; brown, moist, fine to medium sand, subrounded to rounded gravel, (alluvium).
	9-							BOTTOM OF TEST PIT
	10-							
	11-							
	12-							
	13-							
	14-							

Project No.: 2021102

Surface Elevation: 629.0 feet (Approx.)

Date of Test Pit: October 18, 2002

Test Pit Log: TP-3

Cottage Grove WWTP Improvements

Cottage Grove, Oregon

Comments	Depth, Feet	Sample #	Location	Class Symbol	Water Table	C, TSF	Symbol	Soil and Rock Description
Surface: grass.								Stiff SILT, some gravel and cobbles; orange-brown, dry to damp, low plasticity, subrounded gravel and cobbles, blocky structure, very fine roots, (fill).
	1-							
	2-	S-4-1	■					Soft to medium stiff SILT; orange-brown, dry to damp, medium plasticity, (alluvium).
	3-							
	4-					0.20		
	5-							
	6-							Dense, sandy GRAVEL, some cobbles; orange-brown, damp to wet, subrounded to rounded gravel and cobbles, fine to medium sand, (alluvium).
	7-							
	8-							
	9-							
Moderate to fast seepage noted at ±9½ feet. Minor caving of gravel noted below ±10 feet.	10-							
	11-							
	12-							BOTTOM OF TEST PIT
	13-							
	14-							

Project No.: 2021102

Surface Elevation: 629.0 feet (Approx.)

Date of Test Pit: October 18, 2002

Test Pit Log: TP-4

Cottage Grove WWTP Improvements

Cottage Grove, Oregon

Comments	Depth, Feet	Sample #	Location	Class Symbol	Water Table	C, TSF	Symbol	Soil and Rock Description
Surface: gravel, grass and landscaping fabric.								Medium stiff, gravelly SILT, some organics; brown, dry to damp, low plasticity, subrounded gravel, (fill).
	1-							
	2-							Medium stiff SILT, trace sand with depth; orange-brown, iron-stained with depth, damp, medium plasticity, (alluvium).
	3-	S-5-1	■					
	4-					0.25		
	5-							
	6-							
	7-							
Backhoe refusal at ±9 feet.	8-							Very dense, sandy GRAVEL, some boulders and cobbles; damp to moist, rounded gravel, (alluvium).
No water encountered to the limit of excavation.	9-							BOTTOM OF TEST PIT
	10-							
	11-							
	12-							
	13-							
	14-							

Project No.: 2021102

Surface Elevation: 628.0 feet (Approx.)

Date of Test Pit: October 18, 2002

Test Pit Log: TP-5

Cottage Grove WWTP Improvements

Cottage Grove, Oregon

Comments	Depth, Feet	Sample #	Location	Class Symbol	Water Table	C, TSF	Symbol	Soil and Rock Description
Surface: grass and weeds.								Medium dense, silty GRAVEL, some cobbles and concrete debris; brown to orange-brown, dry to damp, rounded to angular gravel, cobbles and debris, (variable fill).
	1-							
	2-	S-6-1	■					
	3-							
	4-							
	5-	S-6-2	■					Medium stiff, clayey SILT, trace to some organics; dark brown to grey, damp, medium plasticity, (alluvium).
	6-					0.50		
	7-							
	8-							
	9-							
	10-							
Very slow seepage noted at ±11 feet.	11-	S-6-3	■			0.45		Medium stiff, silty CLAY; grey-orange, iron-stained, moist, medium to high plasticity, (alluvium).
	12-							
	13-							Dense to very dense, sandy GRAVEL; grey, wet, fine to medium sand, rounded gravel, (alluvium).
	14-							BOTTOM OF TEST PIT

Project No.: 2021102

Surface Elevation: 632.0 feet (Approx.)

Date of Test Pit: October 18, 2002

Test Pit Log: TP-6

Cottage Grove WWTP Improvements

Cottage Grove, Oregon

Appendix C

Laboratory Test Results

Professional
Geotechnical
Services

Foundation Engineering, Inc.

MEI-CHARLTON, INC.
2233 SW Canyon Road
Portland, OR 97201-2499

503-228-9663
Fax: 503-228-4065
E-mail: meic@meic.com
Internet: http://www.meic.com

ENGINEERS and SCIENTISTS solving problems through APPLIED RESEARCH, CONSULTING ENGINEERING and CHEMISTRY

TO:
Foundation Engineering, Inc.
Attention: Mel McCraken
820 NW Cornell Avenue
Corvallis, OR 97330-4517

CLIENT NO.: 2021102

REFERENCE NO.: 6803007

DATE: 31 Oct 2002

SUBJECT: SOIL SAMPLES, SS-1-3 AND S-1-2; ANALYZE TWO SAMPLES FOR SULFIDE AND CHLORIDE CONTENT

You asked MEI-Charlton, Inc. to analyze two soil samples, SS-1-3 and S-1-2, for sulfide and chloride content.

The results of our analyses are as follows:

		Soil Sample Identification	
		Project No. 2021102, Cottage Grove WWTP	
Analysis, ppm*	**Method Specification**	**SS-1-3@15-16.5'**	**S-1-2@3-4'**
Sulfide	SM 4500-S^{-2} Lead acetate paper	<2	<2
Chloride	SM 4500-Cl^{-1} B	7	26

*1:1 water extraction, 24 hours.
SM=Standard Methods for the Examination of Water and Wastewater, 18th Ed., 1992 (SM)
< means less than

If you have questions or need further assistance, please contact us.

A. Mehrabzadeh

Ahmad A. Mehrabzadeh
Environmental Scientist

D.G. Chakrapani, PhD, PE
Account Director

AAM:jg
3 copies

Cottage Grove WWTP, Storage Pond, Revised Final Geotechnical Data Report, Shannon & Wilson, Inc., November 2019

Revised Final Geotechnical Data Repo
Cottage Grove Wastewater Treatment Pla
Storage Pon
Cottage Grove, Orego

November 12, 2019

SHANNON & WILSON, INC.

GEOTECHNICAL AND ENVIRONMENTAL CONSULTANTS

Revised Final Geotechnical Data Repor
Cottage Grove Wastewater Treatment Plan
Storage Pond
Cottage Grove, Oregon

November 12, 2019

SHANNON & WILSON, INC.

GEOTECHNICAL AND ENVIRONMENTAL CONSULTANTS

Excellence. Innovation. Service. Value
Since 1954

Submitted To:
Brooke Barry
West Yost Associates, Inc.
4949 Meadows Road, Ste 125
Lake Oswego, Oregon 97035

By:
Shannon & Wilson, Inc.
3990 Collins Way, Suite 100
Lake Oswego, Oregon 97035

(503) 210-4750
www.shannonwilson.com

100125

TABLE OF CONTENTS

TABLES

FIGURES

APPENDICES

REVISED FINAL GEOTECHNICAL DATA REPORT
COTTAGE GROVE WASTEWATER TREATMENT PLANT
STORAGE POND
COTTAGE GROVE, OREGON

REVISION HISTORY

This geotechnical data report (GDR) was previously submitted as a final version on September 17, 2019. The GDR has since been updated to include the results of a test pit performed at the west end of the site by the City of Cottage Grove (City) from August 2018. The actual subsurface conditions encountered by the City were summarized in an email. The subsurface soils encountered during the test pit were not summarized, but the groundwater conditions were observed and provided in the email. The groundwater observations made by the City have been included in Section 6.0 of this revised final GDR.

1.0 INTRODUCTION

1.1 General

This geotechnical data report (GDR) presents a summary of our literature research, field explorations, and laboratory test data compiled to support design and construction of the Cottage Grove Wastewater Treatment Plant Storage Pond in Cottage Grove, Oregon. The Vicinity Map, Figure 1, shows the general location of the proposed project. The City of Cottage Grove is the project owner and West Yost Associates, Inc. (WYA), is leading the project design. Shannon & Wilson, Inc. (Shannon & Wilson), is providing geotechnical engineering services for the project under Task Order No. 7 with WYA.

1.2 Project Understanding

Our understanding, based on preliminary site plans and discussions with WYA, is that an approximately 300-foot by 700-foot storage pond will be constructed south of the existing Cottage Grove Wastewater Treatment Plant as part of a recycled water system expansion.

Along with the proposed storage pond, two pipelines were proposed. One pipeline was planned to be a 10-inch-diameter C900 PVC pipe and the other was planned to be a 12-inch-diameter C900 PVC pipe. Both pipes were planned to function as recycled water pipes. However, we understand that the proposed pipelines were planned to be shallow installations (e.g. less than 4 feet) and thus are not included within the geotechnical scope of our services.

1.3 Scope of Work

Shannon & Wilson's services were conducted in accordance with the Scope of Work submitted by Shannon & Wilson and presented in Task Order No. 7, dated April 17, 2018. The scope of services related to the GDR includes the following outline of activities:

- Review available existing information and visit the site to observe existing site conditions, and geologic hazards;
- Explore the subsurface conditions with two geotechnical borings and collect soil samples;
- Install a standpipe piezometer in one of the boreholes;
- Conduct laboratory testing on selected soil samples to characterize soils and develop soil properties for evaluation; and
- Prepare this Geotechnical Data Report (GDR) summarizing our explorations.

2.0 SITE GEOLOGY AND SUBSURFACE CONDITIONS

The project area is located at the southern end of the Willamette Valley physiographic province. The Willamette Valley is a forearc basin with a trough-like configuration brought about by uplift and tilting of the Coast Range and the Western Cascades. Bedrock underlying the Willamette Valley generally consists of Eocene age volcanic rock, which has been overlain by sedimentary deposits.

In the vicinity of the project area, the site is underlain by the Fisher and Eugene Formations of late Eocene to early Oligocene age. The Fisher Formation consists of andesitic lapilli tuff, breccias, and water-laid and air-fall silicic ash from continental volcanic sources (Walker and MacLeod, 1991). The upper parts of the non-marine Fisher Formation apparently lap onto and are interbedded with the marine Eugene Formation toward the north, while the Fisher may also interfinger with the Colestin Formation toward the west; the three formations are roughly age equivalent. South of the latitude of Cottage Grove, the Fisher Formation is overlain by a welded tuff unit dated at about 35 million years (late Eocene) before the present time.

3.0 FIELD EXPLORATIONS

3.1 Site Reconnaissance

During a brief site reconnaissance while locating boreholes by WYA, a large boulder/rock/outcrop was observed protruding above the existing ground surface. The origin of this boulder/rock/outcrop is unknown. The approximate location of the rock/boulder/outcrop feature is shown on Figure 2, and a photo of this feature is shown on Figure 3.

3.2 Field Exploratons

The field exploration program included two geotechnical borings designated B-1 and B-2. The borings were drilled on June 26, 2018, using a trailer-mounted drill rig provided and operated by Greg Vandehey Soil Sampling (Vandehey), of Forest Grove, Oregon. The borings were drilled to total depths ranging from 15 to 16.5 feet below the existing ground surface using solid stem auger drilling techniques. An observation well was installed in boring B-2 to allow ongoing groundwater level measurements. Sampling included Standard Penetration Test (SPT) sampling performed in accordance with ASTM D1586.

Shannon & Wilson engineering staff were on site during drilling to observe drilling, collect samples, and maintain logs of the materials encountered. The approximate boring locations are shown on the Site and Exploration Plan, Figure 2. Presented in Appendix A are details of the exploration program (including descriptions of the techniques used to advance and sample the borings), logs of the materials encountered, and borehole installation and backfill details.

4.0 LABORATORY TESTING

The samples we obtained during our field explorations were transported to our laboratory for further examination. We then selected representative samples for laboratory tests. The laboratory testing program included moisture content tests, Atterberg limits, and a unit weight determination. All laboratory tests were performed by Shannon & Wilson in accordance with applicable ASTM International (ASTM) standard test procedures. Results of the laboratory tests and brief descriptions of the test procedures are presented in Appendix B, Laboratory Testing Results. Results are also presented graphically on the boring logs in Appendix A.

5.0 SUBSURFACE CONDITIONS

The explorations and laboratory testing were performed to evaluate geotechnical soil and groundwater conditions for the proposed storage pond. Our observations are specific to the locations, depths, and times noted on the logs and may not be applicable to all areas of the site. No amount of explorations or testing can precisely predict the characteristics, quality, or distribution of subsurface and site conditions. Potential variation includes, but is not limited to, the following:

- The conditions between and below explorations may be different.
- The passage of time or intervening causes (natural and manmade) may result in changes to site and subsurface conditions.
- Groundwater levels and flow directions may fluctuate due to seasonal, irrigation-related, and recharge source variations.

If conditions different from those described herein are encountered during construction, we should review our description of the subsurface conditions and reconsider our site subsurface characterizations.

5.1 Geotechnical Units

We grouped the materials encountered in our field explorations into two geotechnical units, as described below. Our interpretation of the subsurface conditions is based on the explorations and regional geologic information from published sources. The geotechnical units are as follows:

- **Alluvial Deposits**: medium stiff, Lean Clay to Lean Clay with Sand (CL); very stiff, Fat Clay (CH); dense, Silty Gravel with Sand (GM); medium dense, Silty Sand with Gravel (SM) to Silty Gravel with Sand (GM);
- **Eugene Formation:** medium dense to dense, Poorly Graded Gravel with Silt and Sand (GP-GM); hard, Fat Clay to Fat Clay with Sand (CH).

These geotechnical units were grouped based on their engineering properties, geologic origins, and their distribution in the subsurface. Contacts between the units may be more gradational than shown in the Drill Logs in Appendix A. The Standard Penetration Test (SPT) N-values shown on the Drill Logs, and discussed below, are in blows per foot (bpf) as counted in the field (uncorrected). The following sections describe the geotechnical unit characteristics in greater detail.

5.1.1 Alluvial Deposits

Alluvial deposits were encountered in both borings from the ground surface to depths ranging from 9.5 to 9.8 feet. The unit generally consisted of brown to dark brown, medium stiff to stiff, Lean Clay to Lean Clay with Sand (CL), very stiff, Fat Clay (CH), and medium dense to dense, Silty Sand with Gravel (SM) to Silty Gravel with Sand (GM). The fines were generally low plasticity, but some samples of medium to high plasticity fines were identified where fat clay was observed. The gravel constituent was generally fine to coarse, subangular to subrounded. The sand constituent was generally fine to medium. Natural moisture contents ranged from 15 to 47 percent. SPT N-values ranged from 5 to 33 bpf.

5.1.1 Eugene Formation

The Eugene Formation was encountered in both borings below the alluvial deposits, and both borings were terminated in the unit. The unit generally consisted of gray and purple gray, hard, Fat Clay (CH), and brown, medium dense to dense, Poorly Graded Gravel with Silt and Sand (GP-GM). The sand constituent in the unit ranged from fine to coarse grained. The fines were typically medium plasticity and the soil was wet. Natural moisture contents ranged from 15 to 34 percent. SPT N-values typically ranged from 20 to 83 bpf. A refusal blowcount was observed in sample S-5 of boring B-1 where more than 50 blows was achieved for a 6-inch interval.

5.2 Groundwater

Groundwater levels were noted during drilling since the borings were drilled using solid stem auger drilling technique. A standpipe piezometer was installed in Boring B-2 to a depth of 15 feet. A reading was obtained from the piezometer at the time of drilling. Also, a groundwater level measurement was made in the open borehole B-1 immediately prior to backfilling. The groundwater level measurements from the installed well and the open borehole are presented in Table 1, Groundwater Level Data.

TABLE 1
GROUNDWATER LEVEL DATA

	B-1*	Piezometer B-2
Piezometer Reading Date	Depth to Water (ft)	Depth to Water (ft)
6/26/18	2.16	12.85

*Well reading obtained from open hole after drilling was completed.

Based on the groundwater level data obtained from the explorations, there appears to be a groundwater anomaly present at this site. Note that the piezometer was not developed at the time of drilling. The boring was completed with the solid stem auger drilling technique, and it is unlikely that developing the well would significantly increase performance of the well. However, based on the groundwater anomaly observed during our explorations, the project team may consider developing the well in an attempt to increase performance of the well.

We further recommend that additional groundwater readings be performed of the installed well and that the project team consider performing additional explorations to further characterize the groundwater conditions at the site. Our recommended additional explorations are presented in the following Section 6.0.

An additional test pit exploration was performed by the City and the summary of the groundwater conditions encountered during their exploration is discussed in Section 6.0 of this report.

6.0 ADDITIONAL EXPLORATION PERFORMED BY OTHERS

We understand that an additional exploration consisting of one test pit was performed by the City near the west end of the planned project site in August 2018. An email was provided by the City that summarized the groundwater conditions encountered during the test pit exploration. Subsurface soil conditions were NOT summarized fromthe test pit exploration. Shannon & Wilson was not on-site during the test pit exploration performed by the City.

The City indicated that groundwater began entering the test pit when the excavation reached an approximate depth of 7 feet 3 inches below the existing ground surface. The City left the excavation open and observed the water level over a period of approximately 5.5 hours. The City observed that the groundwater level rose from the initial level of 7 feet 3 inches to 4 feet 6 inches over the 5.5-hour observation period.

7.0 RECOMMENDED ADDITIONAL EXPLORATIONS

Based on the observations made during the brief site reconnaissance and subsurface conditions observed during Shannon & Wilson's explorations, we recommend that additional explorations be performed to characterize the subsurface and the boulder/rock/outcrop feature. At a minimum, we recommend that additional explorations consisting of shallow excavations (often referred to as test pits) be performed with the use of an excavator.

We recommend that additional test pit explorations be performed near the boulder/rock/outcrop feature and near the extents of the proposed pond to identify if this feature is localized or has greater extent. Also, test pits are needed to further identify the groundwater condition across the site, since there appears to be a groundwater level anomaly. We would recommend at least one day of additional test pit explorations, which should likely result in obtaining up to 10 to 12 test pits that are observed and documented by WYA or Shannon & Wilson.

8.0 LIMITATIONS

This GDR and the explorations performed have been completed for the exclusive use of West Yost Associates, Inc., and the City of Cottage Grove for specific application to the design of the Cottage Grove Wastewater Treatment Plant Storage Pond. The data contained in this report are based upon site conditions as they existed at the time the explorations were conducted, and further assume that the explorations are representative of the subsurface conditions in the project area; that is, the subsurface conditions throughout the project area are not significantly different from those disclosed by the explorations. Within the limitations of the scope, schedule, and budget, the data presented in this report were collected and presented in accordance with generally accepted professional geotechnical practice in this area at the time this report was prepared. No warranty, express or implied, is made.

This report provides the geotechnical data collected through our explorations and an exploration performed by others. No design recommendations or interpretive information are provided. This report may be provided to prospective contractors as a basis for design or bidding. This report is not a warranty of subsurface conditions.

Unanticipated soil conditions are commonly encountered and cannot fully be disclosed by information from the explorations and testing described in this report. Such unexpected conditions frequently require additional expenditures be made to attain properly constructed projects. Therefore, some contingency fund is recommended to accommodate the potential for extra costs.

The scope of our geotechnical services did not include environmental site assessments or evaluations regarding the presence or absence of hazardous or toxic materials in the soil, surface water, groundwater, or air, on or below the site, or for evaluation or disposal of contaminated soils or groundwater, should any be encountered, except as noted in this report.

Shannon & Wilson has prepared a document, "Important Information About Your Geotechnical/Environmental Report," to assist you and others in understanding the use and limitations of this document. This document is included in Appendix C.

SHANNON & WILSON, INC.

REGISTERED PROFESSIONAL ENGINEER
93570PE
Kevin Wood
OREGON
MAY 8, 2018
KEVIN J. WOOD
EXPIRES: 6/30/20

Jerry Jacksha

Jerry Jacksha, PE, GE
Senior Associate | Geotechnical Engineer

Kevin Wood, PE
Senior Engineer

KJW/JLJ/mmm

9.0 REFERENCES

Walker, G. W. and MacLeod, N. S., 1991, Geologic map of Oregon: U. S. Geological Survey, scale 1:500,000, 2 sheets.

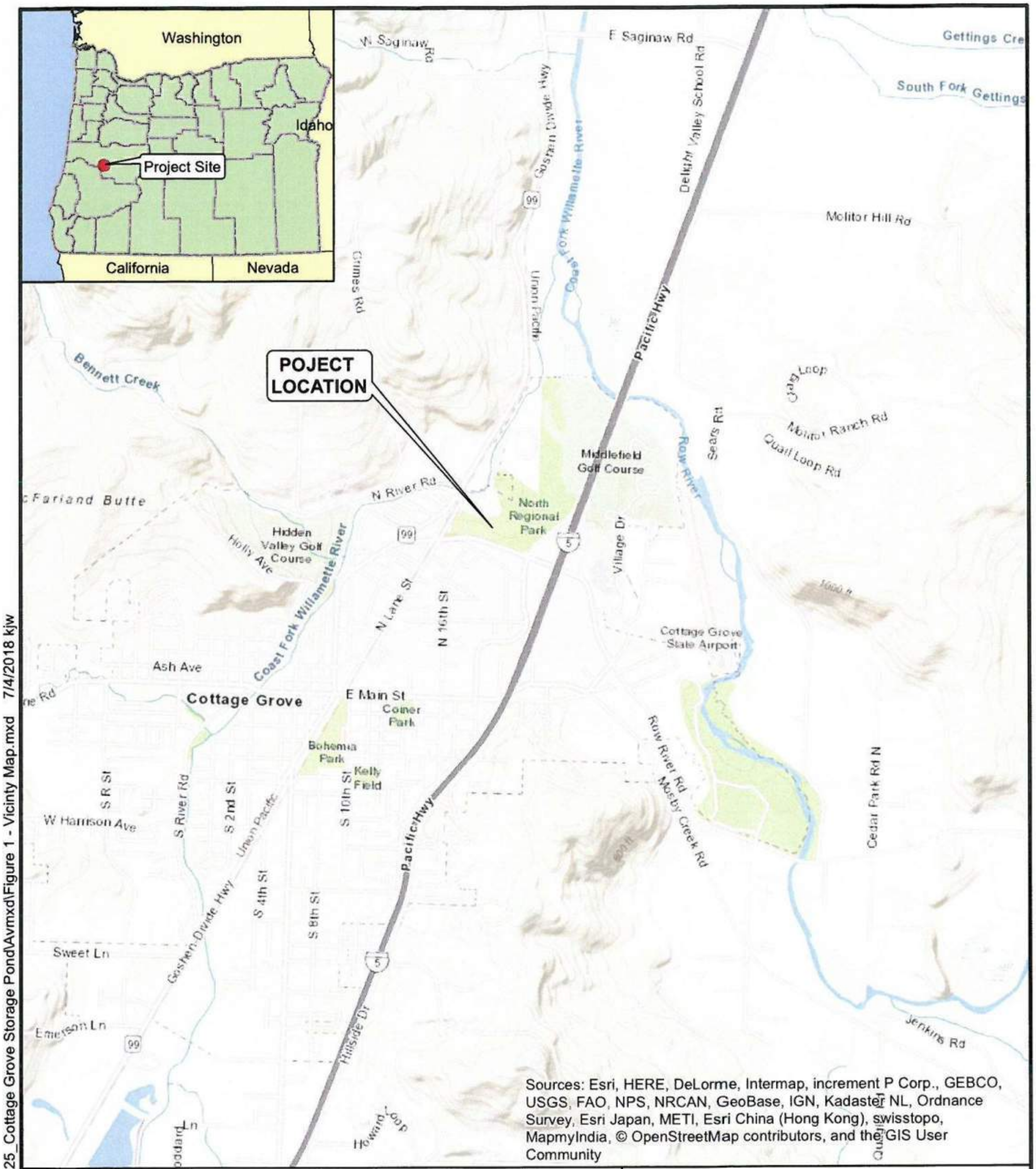

Sources: Esri, HERE, DeLorme, Intermap, increment P Corp., GEBCO, USGS, FAO, NPS, NRCAN, GeoBase, IGN, Kadaster NL, Ordnance Survey, Esri Japan, METI, Esri China (Hong Kong), swisstopo, MapmyIndia, © OpenStreetMap contributors, and the GIS User Community

City of Cottage Grove
Storage Pond
Cottage Grove, Oregon

VICINITY MAP

November 2019

100125

SHANNON & WILSON, INC.
Geotechnical and Environmental Consultants

FIG. 1

Path: T:\Projects\PDX\100000s\100125_Cottage Grove Storage Pond\Avmxd\Figure 1 - Vicinity Map.mxd 7/4/2018 kjw


Approximate location of boulder / rock / outcrop
B-1
E Cottage Grove Con
Source: Esri, DigitalGlobe, GeoEye, Earthstar Geographics, CNES
with Piezometer
0
50
100
200
Scale in Feet

Note: Boulder / rock / outcrop observed by West Yost Associates, Inc. (WYA) during site reconnaisance and photo provided by WYA.

City of Cottage Grove
Storage Pond
Cottage Grove, Oregon

OBSERVED BOULDER / ROCK / OUTCROP

November 2019 100125

SHANNON & WILSON, INC.
Geotechnical and Environmental Consultants

FIG. 3

APPENDIX A

FIELD EXPLORATIONS

TABLE OF CONTENTS

FIGURES

APPENDIX A

FIELD EXPLORATIONS

A.1 GENERAL

Shannon & Wilson, Inc., explored subsurface conditions at the project site on June 26, 2018 with two soil borings, designated B-1 and B-2. Borings B-1 and B-2 were drilled to depths of 15 and 16.5 feet below ground surface (bgs), respectively. The exploration locations were marked in the field and referenced to the nearest existing structures and should be considered approximate. The exploration locations are shown on Figure 2, Site and Exploration Plan. Procedures and techniques used to advance the explorations and collect samples are described in the following paragraphs.

A.2 DRILLING

Drilling operations for borings B-1 and B-2 were accomplished by Greg Vandehey Soil Sampling (Vandehey) of Forest Grove, Oregon. Vandehey provided and operated a Simco 2400 trailer-mounted drill rig. The boreholes were advanced using solid stem auger drilling techniques. A Shannon & Wilson engineering staff member supervised the field exploration effort, observed the exploratory drilling, collected samples, and logged the borings.

Boring B-1 was backfilled with bentonite chips, in accordance with Oregon Water Resources Department regulations. Boring B-2 had a standpipe piezometer installed to the depth of the boring and was backfilled in accordance with Oregon Water Resources Department regulartions.

A.3 SAMPLING

Disturbed samples were collected from borings B-1 and B-2 at 2.5-foot intervals using a standard 2-inch outside diameter (O.D.) split spoon sampler in conjunction with Standard Penetration Testing (SPT). In a Standard Penetration Test, ASTM D1586, the 2-inch O.D. sampler is driven 18 inches into the soil using a 140-pound hammer dropped 30 inches. The number of blows required to drive the sampler the last 12 inches is defined as the standard penetration resistance, or N-value. The SPT N-value provides a measure of in-situ relative density of granular soils such as sand and gravel, and the consistency of cohesive soils such as silt and clay. All disturbed samples were visually classified and described in the field, sealed to retain moisture, and returned to our laboratory for additional examination and testing.

A.4 MATERIAL DESCRIPTIONS

In the field, soil samples were classified visually in general accordance with ASTM D2488 Standard Practice for Description and Identification of Soils (Visual-Manual Procedure). Consistency, color, relative moisture, degree of plasticity, peculiar odors, and other distinguishing characteristics of the samples were noted. Once returned to the laboratory, soil samples were re-examined and field classifications were modified as necessary. We refined our visual-manual soil classifications based on the results of the laboratory tests, using elements of the Standard Practice for Classification of Soils for Engineering Purposes (Unified Soil Classification System), ASTM D2487. However, ASTM 2487 was NOT followed in full, because it requires that a suite of tests be performed to classify a single sample. In most cases, we did not have enough of any one sample to perform all of the tests required to fully classify it by ASTM 2487. The specific terminology used in the soil classifications is defined on the Soil Description and Log Key, Figure A1.

A.5 LOGS OF EXPLORATIONS

Summary logs of soil borings are presented in Figures A2 and A3. The left-hand portion of the boring logs gives our description, classification, and geotechnical unit designation of the soils encountered in the boring. The right-hand portion of the boring logs shows a graphic log, sample locations and designations, groundwater information, and a graphical representation of N-values, natural water contents, and sample recovery. Material descriptions and interfaces on the logs are interpretive, and actual changes may be gradual.

Shannon & Wilson, Inc. (S&W), uses a soil identification system modified from the Unified Soil Classification System (USCS). Elements of the USCS and other definitions are provided on this and the following pages. Soil descriptions are based on visual-manual procedures (ASTM D2488) and laboratory testing procedures (ASTM D2487), if performed.

S&W INORGANIC SOIL CONSTITUENT DEFINITIONS

CONSTITUENT[2]	**FINE-GRAINED SOILS (50% or more fines)**[1]	**COARSE-GRAINED SOILS (less than 50% fines)**[1]
Major	***Silt, Lean Clay, Elastic Silt,*** or ***Fat Clay***[3]	***Sand*** or ***Gravel***[4]
Modifying (Secondary) Precedes major constituent	30% or more coarse-grained: ***Sandy*** or ***Gravelly***[4]	More than 12% fine-grained: ***Silty*** or ***Clayey***[3]
Minor Follows major constituent	15% to 30% coarse-grained: ***with Sand*** or ***with Gravel***[4]	5% to 12% fine-grained: ***with Silt*** or ***with Clay***[3]
	30% or more total coarse-grained *and* lesser coarse-grained constituent is 15% or more: ***with Sand*** or ***with Gravel***[5]	15% or more of a second coarse-grained constituent: ***with Sand*** or ***with Gravel***[5]

[1] All percentages are by weight of total specimen passing a 3-inch sieve.
[2] The order of terms is: *Modifying Major with Minor.*
[3] Determined based on behavior.
[4] Determined based on which constituent comprises a larger percentage.
[5] Whichever is the lesser constituent.

MOISTURE CONTENT TERMS

Dry	Absence of moisture, dusty, dry to the touch
Moist	Damp but no visible water
Wet	Visible free water, from below water table

STANDARD PENETRATION TEST (SPT) SPECIFICATIONS

Hammer:	140 pounds with a 30-inch free fall. Rope on 6- to 10-inch-diam. cathead 2-1/4 rope turns, > 100 rpm
Sampler:	10 to 30 inches long Shoe I.D. = 1.375 inches Barrel I.D. = 1.5 inches Barrel O.D. = 2 inches
N-Value:	Sum blow counts for second and third 6-inch increments. Refusal: 50 blows for 6 inches or less; 10 blows for 0 inches.

NOTE: Penetration resistances (N-values) shown on boring logs are as recorded in the field and have not been corrected for hammer efficiency, overburden, or other factors.

PARTICLE SIZE DEFINITIONS

DESCRIPTION	**SIEVE NUMBER AND/OR APPROXIMATE SIZE**
FINES	< #200 (0.075 mm = 0.003 in.)
SAND	
Fine	#200 to #40 (0.075 to 0.4 mm; 0.003 to 0.02 in.)
Medium	#40 to #10 (0.4 to 2 mm; 0.02 to 0.08 in.)
Coarse	#10 to #4 (2 to 4.75 mm; 0.08 to 0.187 in.)
GRAVEL	
Fine	#4 to 3/4 in. (4.75 to 19 mm; 0.187 to 0.75 in.)
Coarse	3/4 to 3 in. (19 to 76 mm)
COBBLES	3 to 12 in. (76 to 305 mm)
BOULDERS	> 12 in. (305 mm)

RELATIVE DENSITY / CONSISTENCY

COHESIONLESS SOILS		**COHESIVE SOILS**	
N, SPT, BLOWS/FT.	RELATIVE DENSITY	N, SPT, BLOWS/FT.	RELATIVE CONSISTENCY
< 4	Very loose	< 2	Very soft
4 - 10	Loose	2 - 4	Soft
10 - 30	Medium dense	4 - 8	Medium stiff
30 - 50	Dense	8 - 15	Stiff
> 50	Very dense	15 - 30	Very stiff
		> 30	Hard

WELL AND BACKFILL SYMBOLS

▧	Bentonite Cement Grout	▒	Surface Cement Seal
▨	Bentonite Grout	■	Asphalt or Cap
▩	Bentonite Chips	▦	Slough
░	Silica Sand	◫	Inclinometer or Non-perforated Casing
⁘	Gravel	◫	Vibrating Wire Piezometer
▤	Perforated or Screened Casing		

PERCENTAGES TERMS [1, 2]

Trace	< 5%
Few	5 to 10%
Little	15 to 25%
Some	30 to 45%
Mostly	50 to 100%

[1] Gravel, sand, and fines estimated by mass. Other constituents, such as organics, cobbles, and boulders, estimated by volume.

[2] Reprinted, with permission, from ASTM D2488 - 09a Standard Practice for Description and Identification of Soils (Visual-Manual Procedure), copyright ASTM International, 100 Barr Harbor Drive, West Conshohocken, PA 19428. A copy of the complete standard may be obtained from ASTM International, www.astm.org.

City of Cottage Grove
Storage Pond
Cottage Grove, Oregon

SOIL DESCRIPTION AND LOG KEY

November 2019
100125

SHANNON & WILSON, INC.
Geotechnical and Environmental Consultants

FIG. A1
Sheet 1 of 3

UNIFIED SOIL CLASSIFICATION SYSTEM (USCS)
(Modified From USACE Tech Memo 3-357, ASTM D2487, and ASTM D2488)

MAJOR DIVISIONS			GROUP/GRAPHIC SYMBOL		TYPICAL IDENTIFICATIONS
COARSE-GRAINED SOILS *(more than 50% retained on No. 200 sieve)*	Gravels *(more than 50% of coarse fraction retained on No. 4 sieve)*	Gravel *(less than 5% fines)*	GW		Well-Graded Gravel; Well-Graded Gravel with Sand
			GP		Poorly Graded Gravel; Poorly Graded Gravel with Sand
		Silty or Clayey Gravel *(more than 12% fines)*	GM		Silty Gravel; Silty Gravel with Sand
			GC		Clayey Gravel; Clayey Gravel with Sand
	Sands *(50% or more of coarse fraction passes the No. 4 sieve)*	Sand *(less than 5% fines)*	SW		Well-Graded Sand; Well-Graded Sand with Gravel
			SP		Poorly Graded Sand; Poorly Graded Sand with Gravel
		Silty or Clayey Sand *(more than 12% fines)*	SM		Silty Sand; Silty Sand with Gravel
			SC		Clayey Sand; Clayey Sand with Gravel
FINE-GRAINED SOILS *(50% or more passes the No. 200 sieve)*	Silts and Clays *(liquid limit less than 50)*	Inorganic	ML		Silt; Silt with Sand or Gravel; Sandy or Gravelly Silt
			CL		Lean Clay; Lean Clay with Sand or Gravel; Sandy or Gravelly Lean Clay
		Organic	OL		Organic Silt or Clay; Organic Silt or Clay with Sand or Gravel; Sandy or Gravelly Organic Silt or Clay
	Silts and Clays *(liquid limit 50 or more)*	Inorganic	MH		Elastic Silt; Elastic Silt with Sand or Gravel; Sandy or Gravelly Elastic Silt
			CH		Fat Clay; Fat Clay with Sand or Gravel; Sandy or Gravelly Fat Clay
		Organic	OH		Organic Silt or Clay; Organic Silt or Clay with Sand or Gravel; Sandy or Gravelly Organic Silt or Clay
HIGHLY-ORGANIC SOILS	Primarily organic matter, dark in color, and organic odor		PT		Peat or other highly organic soils (see ASTM D4427)

FILL	Placed by humans, both engineered and nonengineered. May include various soil materials and debris.		The Fill graphic symbol is combined with the soil graphic that best represents the observed material

NOTE: No. 4 size = 4.75 mm = 0.187 in.; No. 200 size = 0.075 mm = 0.003 in.

NOTES

1. Dual symbols *(symbols separated by a hyphen, i.e., SP-SM, Sand with Silt)* are used for soils with between 5% and 12% fines or when the liquid limit and plasticity index values plot in the *CL-ML* area of the plasticity chart.
2. Borderline symbols *(symbols separated by a slash, i.e., CL/ML, Lean Clay to Silt; SP-SM/SM, Sand with Silt to Silty Sand)* indicate that the soil properties are close to the defining boundary between two groups.
3. The soil graphics above represent the various USCS identifications (i.e., *GP*, *SM*, etc.) and may be augmented with additional symbology to represent differences within USCS designations. *Sandy Silt (ML)*, for example, may be accompanied by the *ML* soil graphic with sand grains added. Non-USCS materials may be represented by other graphic symbols; see log for descriptions.

City of Cottage Grove
Storage Pond
Cottage Grove, Oregon

SOIL DESCRIPTION AND LOG KEY

November 2019 100125

SHANNON & WILSON, INC.
Geotechnical and Environmental Consultants

FIG. A1
Sheet 2 of 3

GRADATION TERMS

Poorly Graded	Narrow range of grain sizes present or, within the range of grain sizes present, one or more sizes are missing (Gap Graded). Meets criteria in ASTM D2487, if tested.
Well-Graded	Full range and even distribution of grain sizes present. Meets criteria in ASTM D2487, if tested.

CEMENTATION TERMS[1]

Weak	Crumbles or breaks with handling or slight finger pressure
Moderate	Crumbles or breaks with considerable finger pressure
Strong	Will not crumble or break with finger pressure

PLASTICITY[2]

DESCRIPTION	VISUAL-MANUAL CRITERIA	APPROX. PLASITICTY INDEX RANGE
Nonplastic	A 1/8-in. thread cannot be rolled at any water content.	< 4%
Low	A thread can barely be rolled and a lump cannot be formed when drier than the plastic limit.	4 to 10%
Medium	A thread is easy to roll and not much time is required to reach the plastic limit. The thread cannot be rerolled after reaching the plastic limit. A lump crumbles when drier than the plastic limit.	10 to 20%
High	It take considerable time rolling and kneading to reach the plastic limit. A thread can be rerolled several times after reaching the plastic limit. A lump can be formed without crumbling when drier than the plastic limit.	> 20%

ADDITIONAL TERMS

Mottled	Irregular patches of different colors.
Bioturbated	Soil disturbance or mixing by plants or animals.
Diamict	Nonsorted sediment; sand and gravel in silt and/or clay matrix.
Cuttings	Material brought to surface by drilling.
Slough	Material that caved from sides of borehole.
Sheared	Disturbed texture, mix of strengths.

PARTICLE ANGULARITY AND SHAPE TERMS[1]

Angular	Sharp edges and unpolished planar surfaces.
Subangular	Similar to angular, but with rounded edges.
Subrounded	Nearly planar sides with well-rounded edges.
Rounded	Smoothly curved sides with no edges.
Flat	Width/thickness ratio > 3.
Elongated	Length/width ratio > 3.

ACRONYMS AND ABBREVIATIONS

ATD	At Time of Drilling
approx.	Approximate/Approximately
Diam.	Diameter
Elev.	Elevation
ft.	Feet
FeO	Iron Oxide
gal.	Gallons
Horiz.	Horizontal
HSA	Hollow Stem Auger
I.D.	Inside Diameter
in.	Inches
lbs.	Pounds
MgO	Magnesium Oxide
mm	Millimeter
MnO	Manganese Oxide
NA	Not Applicable or Not Available
NP	Nonplastic
O.D.	Outside Diameter
OW	Observation Well
pcf	Pounds per Cubic Foot
PID	Photo-Ionization Detector
PMT	Pressuremeter Test
ppm	Parts per Million
psi	Pounds per Square Inch
PVC	Polyvinyl Chloride
rpm	Rotations per Minute
SPT	Standard Penetration Test
USCS	Unified Soil Classification System
q_u	Unconfined Compressive Strength
VWP	Vibrating Wire Piezometer
Vert.	Vertical
WOH	Weight of Hammer
WOR	Weight of Rods
Wt.	Weight

STRUCTURE TERMS[1]

Interbedded	Alternating layers of varying material or color with layers at least 1/4-inch thick; singular: bed.
Laminated	Alternating layers of varying material or color with layers less than 1/4-inch thick; singular: lamination.
Fissured	Breaks along definite planes or fractures with little resistance.
Slickensided	Fracture planes appear polished or glossy; sometimes striated.
Blocky	Cohesive soil that can be broken down into small angular lumps that resist further breakdown.
Lensed	Inclusion of small pockets of different soils, such as small lenses of sand scattered through a mass of clay.
Homogeneous	Same color and appearance throughout.

City of Cottage Grove
Storage Pond
Cottage Grove, Oregon

SOIL DESCRIPTION AND LOG KEY

November 2019

100125

SHANNON & WILSON, INC.
Geotechnical and Environmental Consultants

FIG. A1
Sheet 3 of 3

---

[1] Reprinted, with permission, from ASTM D2488 - 09a Standard Practice for Description and Identification of Soils (Visual-Manual Procedure), copyright ASTM International, 100 Barr Harbor Drive, West Conshohocken, PA 19428. A copy of the complete standard may be obtained from ASTM International, www.astm.org.

[2] Adapted, with permission, from ASTM D2488 - 09a Standard Practice for Description and Identification of Soils (Visual-Manual Procedure), copyright ASTM International, 100 Barr Harbor Drive, West Conshohocken, PA 19428. A copy of the complete standard may be obtained from ASTM International, www.astm.org.

Total Depth: 16.5 ft.
Top Elevation: ~
Vert. Datum:
Horiz. Datum:
Northing: ~
Easting: ~
Station: ~
Offset: ~
Drilling Method: Solid Stem Auger
Drilling Company: Vandehey Soil Exploration
Drill Rig Equipment: Trailer Mount
Other Comments:
Hole Diam.: 4 in.
Rod Type: NWJ
Hammer Type: Cathead

SOIL DESCRIPTION

Refer to the report text for a proper understanding of the subsurface materials and drilling methods. The stratification lines indicated below represent the approximate boundaries between soil types, and the transitions may be gradual.

Elev. Depth (ft.)	Soil Description
	TOPSOIL
0.5	Medium stiff, brown to gray brown mottled, *Lean Clay to Lean Clay with Sand (CL)*; moist; fine to medium sand; low plasticity; moderate to heavy iron oxidation and mottling; disturbed texture. *S-1: Dry unit weight 72.4 pcf* *Moist unit weight 106.4 pcf* **ALLUVIAL DEPOSITS**
4.5	Very stiff, gray brown to gray, *Fat Clay (CH)*; wet; medium to high plasticity; gravel fragment last 3-inch of sampler.
6.3	Dense, brown, *Silty Gravel with Sand (GM)*; wet; fine to coarse, subangular to rounded gravel; fine to coarse sand; low plasticity fines.
9.5	Hard, gray and purple gray mottled, *Fat Clay (CH)*; moist; trace, fine to coarse, subrounded gravel; trace to few, fine to coarse sand; medium plasticity; some gravel and sand remolds to clay; relict conglomerate texture. **EUGENE FORMATION**
12.0	Hard, light blue-gray mottled, *Fat Clay with Sand (CH)*; moist; trace, fine to coarse, subrounded gravel; fine to coarse sand; medium plasticity; relict conglomerate texure with decomposed and partially decomposed gravel and sand clasts.
16.5	Completed: June 26, 2018.

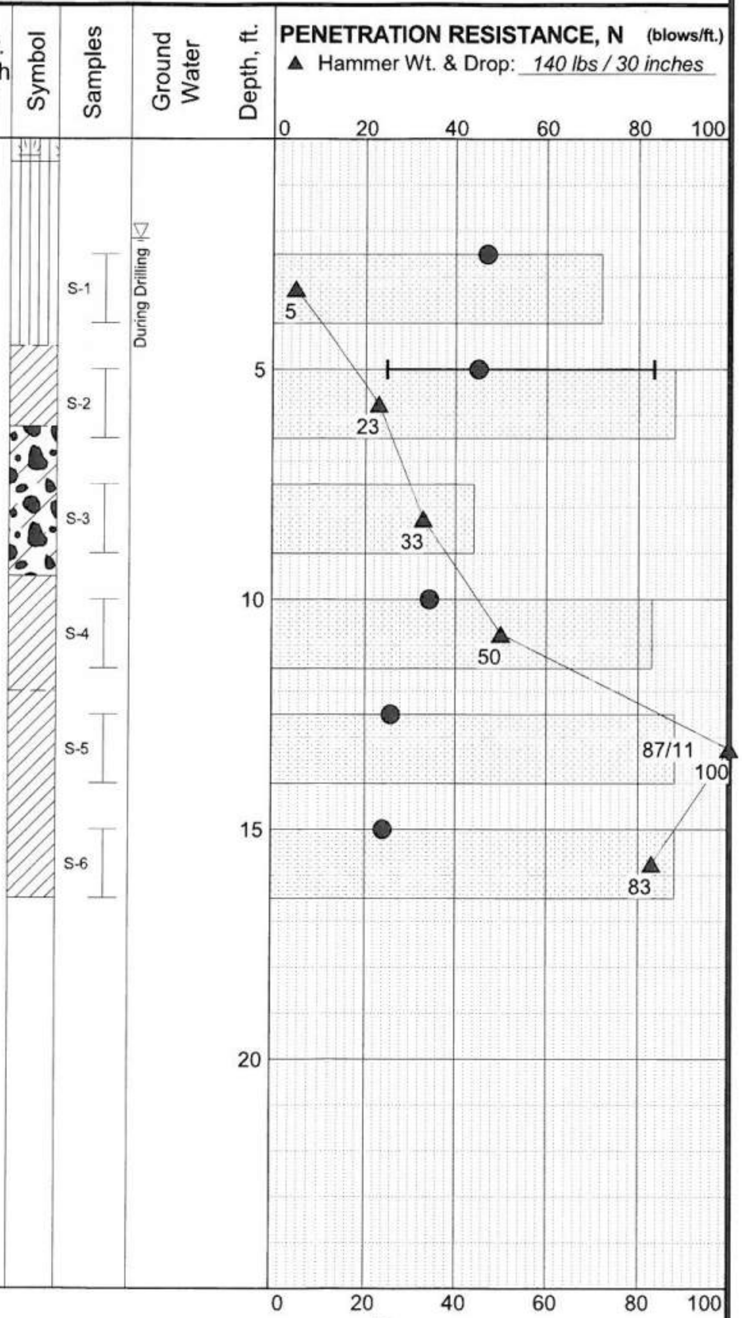

LEGEND

⌶ Standard Penetration Test
▽ Groundwater Level ATD

▨ Recovery (%)
● % Water Content
Plastic Limit ├──┤ Liquid Limit

NOTES

1. Refer to KEY for explanation of symbols, codes, abbreviations, and definitions.
2. Groundwater level, if indicated above, is for the date specified and may vary.
3. Group symbol is based on visual-manual identification and selected lab testing.
4. The hole location and elevation should be considered approximate.

City of Cottage Grove
Storage Pond
Cottage Grove, Oregon

LOG OF BORING B-1

November 2019
100125

SHANNON & WILSON, INC.
Geotechnical and Environmental Consultants

FIG. A2

REV 3

Total Depth: 15 ft.
Top Elevation: ~
Vert. Datum:
Horiz. Datum:
Northing: ~
Easting: ~
Station: ~
Offset: ~
Drilling Method: Solid Stem Auger
Drilling Company: Vandehey Soil Exploration
Drill Rig Equipment: Trailer Mount
Other Comments:
Hole Diam.: 4 in.
Rod Type: NWJ
Hammer Type: Cathead

SOIL DESCRIPTION *Refer to the report text for a proper understanding of the subsurface materials and drilling methods. The stratification lines indicated below represent the approximate boundaries between soil types, and the transitions may be gradual.*	*Elev.* Depth (ft.)
TOPSOIL	
Medium stiff to stiff, brown to dark brown mottled, *Lean Clay to Lean Clay with Sand (CL)*; moist to wet; trace, fine to coarse, subangular to subrounded gravel; fine to medium sand; low to medium plasticity; mixed soil with pockets of dark brown, Fat Clay (CH). **ALLUVIAL DEPOSITS**	0.5
Medium dense, brown, *Silty Sand with Gravel to Silty Gravel with Sand (SM)*; wet; fine to coarse, subangular to subrounded gravel; fine to medium sand; low plasticity fines.	7.0
Medium dense to dense, brown, *Poorly Graded Gravel with Silt and Sand (GP-GM)*; wet; fine to coarse, subangular to rounded gravel; fine to coarse sand; low plasticity fines. **EUGENE FORMATION**	9.5
Completed: June 26, 2018.	15.0

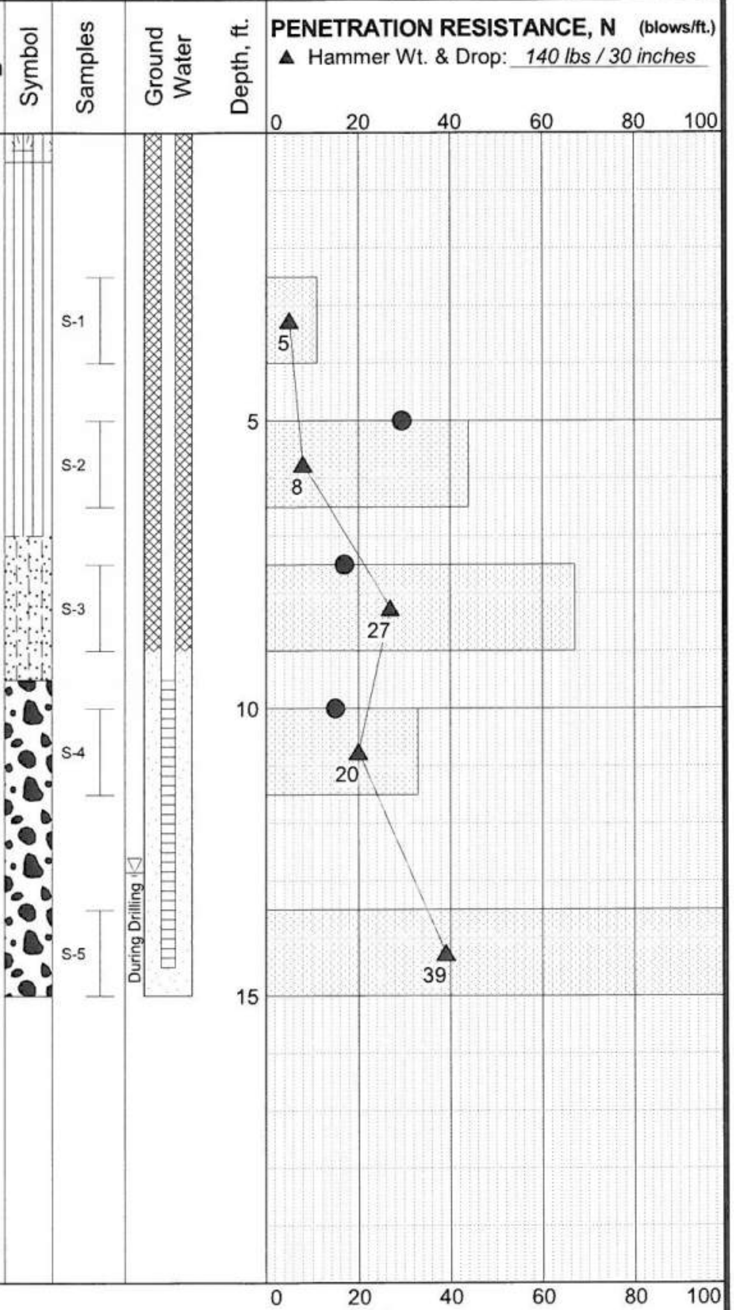

□ Recovery (%)

● % Water Content

Plastic Limit ├──┤ Liquid Limit

LEGEND

⌶ Standard Penetration Test

▽ Groundwater Level ATD

NOTES

1. Refer to KEY for explanation of symbols, codes, abbreviations, and definitions.
2. Groundwater level, if indicated above, is for the date specified and may vary.
3. Group symbol is based on visual-manual identification and selected lab testing.
4. The hole location and elevation should be considered approximate.

City of Cottage Grove
Storage Pond
Cottage Grove, Oregon

LOG OF BORING B-2

November 2019

100125

SHANNON & WILSON, INC.
Geotechnical and Environmental Consultants

FIG. A3

REV 3

MASTER LOG E 100125 COTTAGE GROVE WWTP.GPJ SW2013LIBRARYPDX.GLB SHANWIL_PDX.GDT 7/23/18 Log: KJW Rev: SCS Typ: KJW

APPENDIX B

LABORATORY TEST RESULTS

TABLE OF CONTENTS

FIGURES

APPENDIX B

LABORATORY TEST RESULTS

B.1 GENERAL

The samples obtained during the field explorations were described and identified in the field in accordance with ASTM D2488, Standard Practice for Description and Identification of Soils (Visual-Manual Procedure). The samples were then reviewed in the laboratory. Physical characteristics of the samples were noted, and field descriptions and identifications were modified as necessary. During the examination, some samples were selected for further testing. We refined our descriptions and identifications based on the results of the laboratory tests, in accordance with ASTM D2487, Standard Practice for Classification of Soils for Engineering Purposes (Unified Soil Classification System). However, ASTM D2487 was NOT followed in full, because it requires that a suite of tests be performed to classify a single sample. In most cases, we did not have enough of any one sample to perform all of the tests required to fully classify it by ASTM D2487.

The soil testing program included moisture content, Atterberg limits tests and particle-size analyses. All testing was performed by Shannon & Wilson, Inc., in accordance with applicable ASTM International standards. Test methods and procedures are summarized in the following paragraphs.

B.2 SOIL TESTING

B.2.1 Moisture Content Determination

The water content of selected soil samples recovered from the field explorations was determined in general accordance with ASTM D2216, Standard Method of Laboratory Determination of Water (Moisture) Content of Soil and Rock by Mass. Comparison of water content of a soil with its index properties can be useful in characterizing soil unit weight, consistency, compressibility, and strength. Water contents are plotted on the Boring Logs presented in Appendix A.

B.2.2 Atterberg Limits

Atterberg limits were determined for selected samples in accordance with ASTM D4318. This analysis yields index parameters of the soil that are useful in soil identification as well as in several engineering analyses. An Atterberg limits test determines a soil's liquid limit (LL) and plastic limit (PL). These are the maximum and minimum moisture contents at which the soil exhibits plastic behavior. A soil's plasticity index (PI) can be determined by subtracting PL from LL. The LL, PL, and PI of tested samples are presented on Figure B1, Atterberg Limits Results.

B.2.3 Unit Weight Determination

The unit weight of sample S-1 from boring B-1 was determined in general accordance with ASTM D2937. The unit weight determined from the test is plotted on the Boring Log presented in Appendix A.

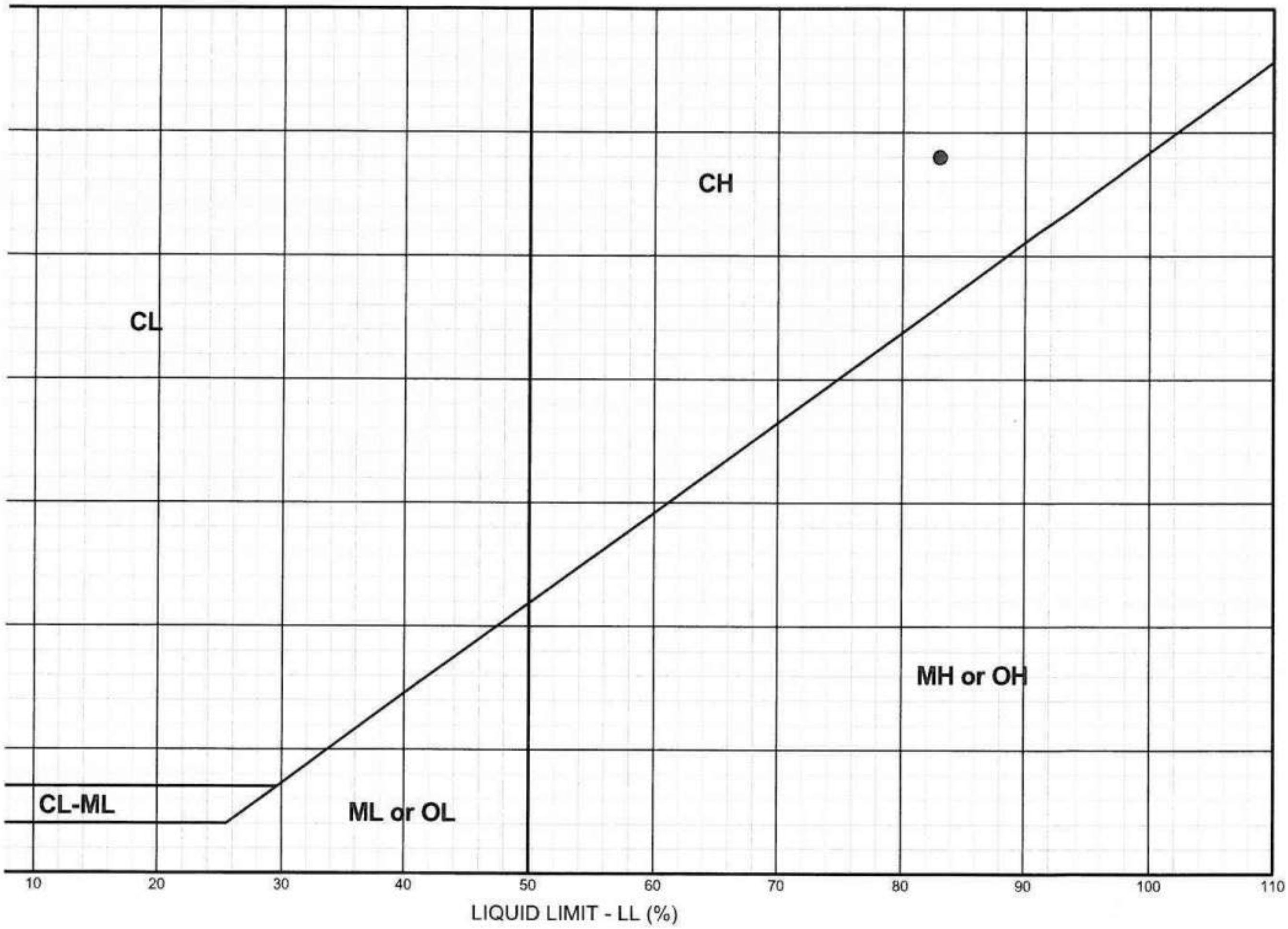

NOTES

1) Atterberg limits
performed in gene
with ASTM D4318
otherwise noted in

2) Group Name ar
Symbol are in acc
ASTM D2488 and
accordance with A
where appropriate
tests are performe

3) Plasticity adject
sample descriptior
to plasticity index
- Nonplastic (NP)
- Low Plasticity (
- Medium Plastici
- High Plasticity (

	DEPTH (feet)	GROUP SYMBOL^2	GROUP NAME^2	LL %	PL %	PI %^{3}	NAT. W.C. %	FINES %
	5.0			83	25	58	119	

City of Cottage
Storage Por
Cottage Grove,

ATTERBERG LIMIT

November 2019

SHANNON & WILSON, INC.
Geotechnical and Environmental Consultants

APPENDIX C

IMPORTANT INFORMATION ABOUT YOUR GEOTECHNICAL / ENVIRONMENTAL REPORT

SHANNON & WILSON, INC.
Geotechnical and Environmental Consultants

Attachment to and part of Report 100125

Date: November 2019

To: Brooke Barry
West Yost Associates, Inc.

IMPORTANT INFORMATION ABOUT YOUR GEOTECHNICAL/ENVIRONMENTAL REPORT

CONSULTING SERVICES ARE PERFORMED FOR SPECIFIC PURPOSES AND FOR SPECIFIC CLIENTS.

Consultants prepare reports to meet the specific needs of specific individuals. A report prepared for a civil engineer may not be adequate for a construction contractor or even another civil engineer. Unless indicated otherwise, your consultant prepared your report expressly for you and expressly for the purposes you indicated. No one other than you should apply this report for its intended purpose without first conferring with the consultant. No party should apply this report for any purpose other than that originally contemplated without first conferring with the consultant.

THE CONSULTANT'S REPORT IS BASED ON PROJECT-SPECIFIC FACTORS.

A geotechnical/environmental report is based on a subsurface exploration plan designed to consider a unique set of project-specific factors. Depending on the project, these may include: the general nature of the structure and property involved; its size and configuration; its historical use and practice; the location of the structure on the site and its orientation; other improvements such as access roads, parking lots, and underground utilities; and the additional risk created by scope-of-service limitations imposed by the client. To help avoid costly problems, ask the consultant to evaluate how any factors that change subsequent to the date of the report may affect the recommendations. Unless your consultant indicates otherwise, your report should not be used: (1) when the nature of the proposed project is changed (for example, if an office building will be erected instead of a parking garage, or if a refrigerated warehouse will be built instead of an unrefrigerated one, or chemicals are discovered on or near the site); (2) when the size, elevation, or configuration of the proposed project is altered; (3) when the location or orientation of the proposed project is modified; (4) when there is a change of ownership; or (5) for application to an adjacent site. Consultants cannot accept responsibility for problems that may occur if they are not consulted after factors which were considered in the development of the report have changed.

SUBSURFACE CONDITIONS CAN CHANGE.

Subsurface conditions may be affected as a result of natural processes or human activity. Because a geotechnical/environmental report is based on conditions that existed at the time of subsurface exploration, construction decisions should not be based on a report whose adequacy may have been affected by time. Ask the consultant to advise if additional tests are desirable before construction starts; for example, groundwater conditions commonly vary seasonally.

Construction operations at or adjacent to the site and natural events such as floods, earthquakes, or groundwater fluctuations may also affect subsurface conditions and, thus, the continuing adequacy of a geotechnical/environmental report. The consultant should be kept apprised of any such events, and should be consulted to determine if additional tests are necessary.

MOST RECOMMENDATIONS ARE PROFESSIONAL JUDGMENTS.

Site exploration and testing identifies actual surface and subsurface conditions only at those points where samples are taken. The data were extrapolated by your consultant, who then applied judgment to render an opinion about overall subsurface conditions. The actual interface between materials may be far more gradual or abrupt than your report indicates. Actual conditions in areas not sampled may differ from those predicted in your report. While nothing can be done to prevent such situations, you and your consultant can work together to help reduce their impacts. Retaining your consultant to observe subsurface construction operations can be particularly beneficial in this respect.

A REPORT'S CONCLUSIONS ARE PRELIMINARY.

The conclusions contained in your consultant's report are preliminary because they must be based on the assumption that conditions revealed through selective exploratory sampling are indicative of actual conditions throughout a site. Actual subsurface conditions can be discerned only during earthwork; therefore, you should retain your consultant to observe actual conditions and to provide conclusions. Only the consultant who prepared the report is fully familiar with the background information needed to determine whether or not the report's recommendations based on those conclusions are valid and whether or not the contractor is abiding by applicable recommendations. The consultant who developed your report cannot assume responsibility or liability for the adequacy of the report's recommendations if another party is retained to observe construction.

THE CONSULTANT'S REPORT IS SUBJECT TO MISINTERPRETATION.

Costly problems can occur when other design professionals develop their plans based on misinterpretation of a geotechnical/environmental report. To help avoid these problems, the consultant should be retained to work with other project design professionals to explain relevant geotechnical, geological, hydrogeological, and environmental findings, and to review the adequacy of their plans and specifications relative to these issues.

BORING LOGS AND/OR MONITORING WELL DATA SHOULD NOT BE SEPARATED FROM THE REPORT.

Final boring logs developed by the consultant are based upon interpretation of field logs (assembled by site personnel), field test results, and laboratory and/or office evaluation of field samples and data. Only final boring logs and data are customarily included in geotechnical/environmental reports. These final logs should not, under any circumstances, be redrawn for inclusion in architectural or other design drawings, because drafters may commit errors or omissions in the transfer process.

To reduce the likelihood of boring log or monitoring well misinterpretation, contractors should be given ready access to the complete geotechnical engineering/environmental report prepared or authorized for their use. If access is provided only to the report prepared for you, you should advise contractors of the report's limitations, assuming that a contractor was not one of the specific persons for whom the report was prepared, and that developing construction cost estimates was not one of the specific purposes for which it was prepared. While a contractor may gain important knowledge from a report prepared for another party, the contractor should discuss the report with your consultant and perform the additional or alternative work believed necessary to obtain the data specifically appropriate for construction cost estimating purposes. Some clients hold the mistaken impression that simply disclaiming responsibility for the accuracy of subsurface information always insulates them from attendant liability. Providing the best available information to contractors helps prevent costly construction problems and the adversarial attitudes that aggravate them to a disproportionate scale.

READ RESPONSIBILITY CLAUSES CLOSELY.

Because geotechnical/environmental engineering is based extensively on judgment and opinion, it is far less exact than other design disciplines. This situation has resulted in wholly unwarranted claims being lodged against consultants. To help prevent this problem, consultants have developed a number of clauses for use in their contracts, reports, and other documents. These responsibility clauses are not exculpatory clauses designed to transfer the consultant's liabilities to other parties; rather, they are definitive clauses that identify where the consultant's responsibilities begin and end. Their use helps all parties involved recognize their individual responsibilities and take appropriate action. Some of these definitive clauses are likely to appear in your report, and you are encouraged to read them closely. Your consultant will be pleased to give full and frank answers to your questions.

The preceding paragraphs are based on information provided by the
ASFE/Association of Engineering Firms Practicing in the Geosciences, Silver Spring, Maryland